SUN2000-(2KTL-6KTL)-L1

User Manual

Issue	28
Date	2026-06-30

HUAWEI TECHNOLOGIES CO., LTD.

Copyright © Huawei Technologies Co., Ltd. 2026. All rights reserved.

No part of this document may be reproduced or transmitted in any form or by any means without prior written consent of Huawei Technologies Co., Ltd.

Trademarks and Permissions

HUAWEI and other Huawei trademarks are trademarks of Huawei Technologies Co., Ltd.
All other trademarks and trade names mentioned in this document are the property of their respective holders.

Notice

The purchased products, services and features are stipulated by the contract made between Huawei and the customer. All or part of the products, services and features described in this document may not be within the purchase scope or the usage scope. Unless otherwise specified in the contract, all statements, information, and recommendations in this document are provided "AS IS" without warranties, guarantees or representations of any kind, either express or implied.

The information in this document is subject to change without notice. Every effort has been made in the preparation of this document to ensure accuracy of the contents, but all statements, information, and recommendations in this document do not constitute a warranty of any kind, express or implied.

Huawei Technologies Co., Ltd.

Address: Huawei Industrial Base
Bantian, Longgang
Shenzhen 518129
People's Republic of China

Website: https://e.huawei.com

About This Document

Purpose

This document describes the SUN2000-(2KTL-6KTL)-L1 (SUN2000 for short) in terms of its installation, electrical connection, commissioning, maintenance, and troubleshooting. Before installing and operating the inverter, ensure that you are familiar with the features, functions, and safety precautions provided in this document.

Statement

In this document, LUNA only refers to a specific model of Huawei Smart String ESS.

Intended Audience

This document is applicable to:

- Installers
- Users

Symbol Conventions

The symbols that may be found in this document are defined as follows.

Symbol	Description
DANGER	Indicates a hazard with a high level of risk which, if not avoided, will result in death or serious injury.
WARNING	Indicates a hazard with a medium level of risk which, if not avoided, could result in death or serious injury.
CAUTION	Indicates a hazard with a low level of risk which, if not avoided, could result in minor or moderate injury.

Copyright © Huawei Technologies Co., Ltd.

Symbol	Description
NOTICE	Indicates a potentially hazardous situation which, if not avoided, could result in equipment damage, data loss, performance deterioration, or unanticipated results. NOTICE is used to address practices not related to personal injury.
NOTE	Supplements the important information in the main text. NOTE is used to address information not related to personal injury, equipment damage, and environment deterioration.

Change History

Changes between document issues are cumulative. The latest document issue contains all the changes made in earlier issues.

Issue 28 (2026-06-30)

Updated **G Certificate Management and Maintenance**.

Issue 27 (2026-03-30)

- Updated **1.2 Electrical Safety**.
- Updated **7.2 Device Commissioning**.
- Updated the app name.
- Updated the name of the Smart Guard.
- Updated the optimizer name.

Issue 26 (2025-12-30)

- Updated **4.5 Installing a Inverter**.
- Updated **5.2 Preparing Cables**.
- Updated **10 Technical Specifications**.

Issue 25 (2025-09-30)

- Changed "Energy Management Assistant" to "SmartAssistant" throughout the document.
- Added section 7.3.6 "Resetting the Password for Logging In to the Local Commissioning Screen."
- Added section 7.4.5 "Resetting the Password for Logging In to the Local Commissioning Screen."
- Added **D System Shutdown via DI**.

Copyright © Huawei Technologies Co., Ltd.

Issue 24 (2025-07-25)

- Updated **5.2 Preparing Cables**.
- Updated **5.4 (Optional) Installing a Smart Dongle**.
- Updated **10 Technical Specifications**.

Issue 23 (2025-07-01)

Reorganized **7 Power-On and Commissioning**.

Issue 22 (2025-05-08)

Updated **2.1 Overview**.

Issue 21 (2025-03-31)

- Updated **2.1 Overview**.
- Updated **5.2 Preparing Cables**.
- Updated **5.9 (Optional) Connecting Signal Cables**.
- Updated **7 Power-On and Commissioning**.
- Added "Connecting to the Inverter on the App."
- Added "Connecting to the SmartAssistant on the App."
- Updated **A Grid Code**.

Issue 20 (2024-05-30)

- Updated **2.1 Overview**.
- Updated **5.2 Preparing Cables**.

Issue 19 (2024-01-31)

Updated **2.1 Overview**.

Issue 18 (2024-01-12)

- Updated **5.2 Preparing Cables**.
- Updated **5.9 (Optional) Connecting Signal Cables**.
- Updated **8.3 Troubleshooting**.
- Updated **10 Technical Specifications**.
- Updated **A Grid Code**.

Issue 17 (2023-11-03)

Updated **5.6 Connecting an AC Output Power Cable**.

Issue 16 (2023-09-20)

Updated the demand limit.

 Copyright © Huawei Technologies Co., Ltd.

Issue 15 (2023-09-06)

Updated **A Grid Code**.

Issue 14 (2023-08-23)

Updated **C Rapid Shutdown**.

Issue 13 (2023-07-30)

Updated **2.3 Label Description**.

Updated **10 Technical Specifications**.

Issue 12 (2023-06-01)

Updated **2.1 Overview**.

Issue 11 (2023-04-10)

Updated **2.1 Overview**.

Updated **A Grid Code**.

Issue 10 (2023-02-13)

Updated **5.2 Preparing Cables**.

Updated **5.9 (Optional) Connecting Signal Cables**.

Updated the content about creating a plant and an owner account.

Updated "(Optional) Setting the Physical Layout of Smart PV Optimizers."

Updated the content about setting functions and features through device commissioning.

Issue 09 (2022-08-25)

Updated **5.2 Preparing Cables**.

Updated **5.6 Connecting an AC Output Power Cable**.

Updated the content about setting functions and features through device commissioning.

Added the demand limit.

Updated **10 Technical Specifications**.

Updated **A Grid Code**.

Added "Enabling the EMMA (AI Home Energy Management Assistant)."

Added **F Contact Information**.

 Copyright © Huawei Technologies Co., Ltd.

Issue 08 (2022-06-01)

Updated **10 Technical Specifications**.

Issue 07 (2022-03-04)

Updated **5.9 (Optional) Connecting Signal Cables**.

Updated **B Resetting Password**.

Updated **C Rapid Shutdown**.

Issue 06 (2021-12-20)

Updated the content about creating a plant and an owner account.

Updated the content about setting common parameters.

Updated **10 Technical Specifications**.

Issue 05 (2021-08-10)

Updated **5.7 Connecting DC Input Power Cables**.

Updated **5.8 (Optional) Connecting Battery Cables**.

Updated **5.9 (Optional) Connecting Signal Cables**.

Updated the content about creating a plant.

Updated "Connecting to the Inverter on the App."

Updated **C Rapid Shutdown**.

Issue 04 (2021-04-01)

Updated **5.2 Preparing Cables**.

Updated **7.1 System Power-On**.

Updated **8.3 Troubleshooting**.

Issue 03 (2020-09-15)

Updated **5.3 Connecting PE Cables**.

Updated **8.3 Troubleshooting**.

Issue 02 (2020-06-09)

Updated **4.2 Preparing Tools and Instruments**.

Updated **5.2 Preparing Cables**.

Updated **5.7 Connecting DC Input Power Cables**.

Updated **5.9 (Optional) Connecting Signal Cables**.

Updated "(Optional) Setting the Physical Layout of Smart PV Optimizers."

 Copyright © Huawei Technologies Co., Ltd.

Updated **B Resetting Password**.

Issue 01 (2020-04-17)

This issue is the first official release.

Contents

About This Document ii

1 Safety Information 1

1.1 Personal Safety 2
1.2 Electrical Safety 4
1.3 Environment Requirements 7
1.4 Mechanical Safety 9

2 Product Introduction 13

2.1 Overview 13
2.2 Component Description 21
2.3 Label Description 22
2.4 Working Principles 24

3 Storage Requirements 27

4 System Installation 28

4.1 Checking Before Installation 28
4.2 Preparing Tools and Instruments 29
4.3 Determining the Installation Position 30
4.4 Moving a Inverter 34
4.5 Installing a Inverter 34
4.5.1 Wall-Mounted Installation 35
4.5.2 Support-Mounted Installation 37

5 Electrical Connection 41

5.1 Precautions 41
5.2 Preparing Cables 42
5.3 Connecting PE Cables 46
5.4 (Optional) Installing a Smart Dongle 48
5.5 Installing a WLAN Antenna 49
5.6 Connecting an AC Output Power Cable 50
5.7 Connecting DC Input Power Cables 55
5.8 (Optional) Connecting Battery Cables 59
5.9 (Optional) Connecting Signal Cables 61

6 Verification Before Power-On 70

 Copyright © Huawei Technologies Co., Ltd.

7 Power-On and Commissioning 71
7.1 System Power-On 71
7.2 Device Commissioning 74
8 System Maintenance 76
8.1 System Power-Off 76
8.2 Routine Maintenance 77
8.3 Troubleshooting 78
9 Inverter Disposal 79
9.1 Removing a Inverter 79
9.2 Packing a Inverter 79
9.3 Disposing a Inverter 79
10 Technical Specifications 80
A Grid Code 88
B Resetting Password 94
C Rapid Shutdown 95
D System Shutdown via DI 96
E Locating Insulation Resistance Faults 97
F Contact Information 100
G Certificate Management and Maintenance 102
G.1 Initial Certificate Risk Disclaimer 102
G.2 Application Scenarios of Initial Certificates 102
G.3 Updating a Certificate 103
H Acronyms and Abbreviations 105

1 Safety Information

Statement

Before transporting, storing, installing, operating, using, and/or maintaining the equipment, read this document, strictly follow the instructions provided herein, and follow all the safety instructions on the equipment and in this document. In this document, "equipment" refers to the products, software, components, spare parts, and/or services related to this document; "the Company" refers to the manufacturer (producer), seller, and/or service provider of the equipment; "you" refers to the entity that transports, stores, installs, operates, uses, and/or maintains the equipment.

The **DANGER**, **WARNING**, **CAUTION**, and **NOTICE** statements described in this document do not cover all the safety precautions. You also need to comply with relevant international, national, or regional standards and industry practices. **The Company shall not be liable for any consequences that may arise due to violations of safety requirements or safety standards concerning the design, production, and usage of the equipment.**

The equipment shall be used in an environment that meets the design specifications. Otherwise, the equipment may be faulty, malfunctioning, or damaged, which is not covered under the warranty. The Company shall not be liable for any property loss, personal injury, or even death caused thereby.

Comply with applicable laws, regulations, standards, and specifications during transportation, storage, installation, operation, use, and maintenance.

Do not perform reverse engineering, decompilation, disassembly, adaptation, implantation, or other derivative operations on the equipment software. Do not study the internal implementation logic of the equipment, obtain the source code of the equipment software, violate intellectual property rights, or disclose any of the performance test results of the equipment software.

The Company shall not be liable for any of the following circumstances or their consequences:

- Equipment damage due to force majeure such as earthquakes, floods, volcanic eruptions, debris flows, lightning strikes, fires, wars, armed conflicts, typhoons, hurricanes, tornadoes, and other extreme weather conditions
- Operation beyond the conditions specified in this document

 Copyright © Huawei Technologies Co., Ltd.

- Installation or use in environments that do not comply with international, national, or regional standards
- Installation or use by unqualified personnel
- Failure to follow the operation instructions or safety precautions on the product or in this document
- Unauthorized modifications to the product or software code or removal of the product
- Damage caused during transportation by you or a third party authorized by you
- Storage conditions that do not meet the requirements specified in this document
- Failure to comply with local laws, regulations, or related standards due to the materials and tools prepared by you
- Damage caused by your or a third party's negligence, intentional breach, gross negligence, or improper operations or damage not caused by the Company

1.1 Personal Safety

DANGER

Ensure that power is off during installation. Do not install or remove a cable with power on. Transient contact between the core of the cable and the conductor will generate electric arcs or sparks, which may cause a fire or personal injury.

DANGER

Non-standard and improper operations on the energized equipment may cause fire, electric shocks, or explosion, resulting in property damage, personal injury, or even death.

DANGER

Before operations, remove conductive objects such as watches, bracelets, bangles, rings, and necklaces to prevent electric shocks.

DANGER

During operations, use dedicated insulated tools to prevent electric shocks or short circuits. The dielectric withstanding voltage level must comply with local laws, regulations, standards, and specifications.

 Copyright © Huawei Technologies Co., Ltd.

WARNING

During operations, wear personal protective equipment such as protective clothing, insulated shoes, goggles, safety helmets, and insulated gloves.

Figure 1-1 Personal protective equipment

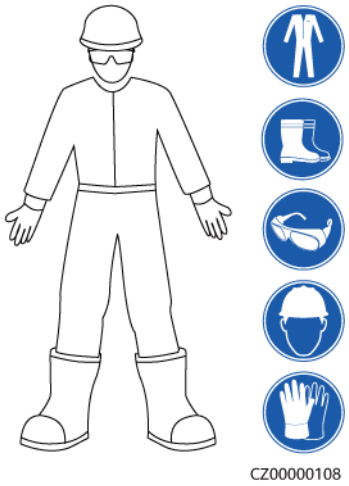

General Requirements

- Do not stop protective devices. Pay attention to the warnings, cautions, and related precautionary measures in this document and on the equipment.
- If there is a likelihood of personal injury or equipment damage during operations, immediately stop, report the case to the supervisor, and take feasible protective measures.
- Do not power on the equipment before it is installed or confirmed by professionals.
- Do not touch the power supply equipment directly or with conductors such as damp objects. Before touching any conductor surface or terminal, measure the voltage at the contact point to ensure that there is no risk of electric shock.
- Do not touch operating equipment because the enclosure is hot.
- Do not touch a running fan with your hands, components, screws, tools, or boards. Otherwise, personal injury or equipment damage may occur.
- In the case of a fire, immediately leave the building or the equipment area and activate the fire alarm or call emergency services. Do not enter the affected building or equipment area under any circumstances.

Personnel Requirements

- Only professionals and trained personnel are allowed to operate the equipment.
  - Professionals: personnel who are familiar with the working principles and structure of the equipment, trained or experienced in equipment operations and are clear of the sources and degree of various potential hazards in equipment installation, operation, maintenance

 Copyright © Huawei Technologies Co., Ltd.

  - Trained personnel: personnel who are trained in technology and safety, have required experience, are aware of possible hazards on themselves in certain operations, and are able to take protective measures to minimize the hazards on themselves and other people
- Personnel who plan to install or maintain the equipment must receive adequate training, be able to correctly perform all operations, and understand all necessary safety precautions and local relevant standards.
- Only qualified professionals or trained personnel are allowed to install, operate, and maintain the equipment.
- Only qualified professionals are allowed to remove safety facilities and inspect the equipment.
- Personnel who will perform special tasks such as electrical operations, working at heights, and operations of special equipment must possess the required local qualifications.
- Only authorized professionals are allowed to replace the equipment or components (including software).
- Only personnel who need to work on the equipment are allowed to access the equipment.

1.2 Electrical Safety

DANGER

Before connecting cables, ensure that the equipment is intact. Otherwise, electric shocks or fires may occur.

DANGER

Non-standard and improper operations may result in fire or electric shocks.

DANGER

Prevent foreign matter from entering the equipment during operations. Otherwise, short circuits, equipment damage, load power derating, power failure, or personal injury may occur.

WARNING

For the equipment that needs to be grounded, install the ground cable first when installing the equipment and remove the ground cable last when removing the equipment.

 Copyright © Huawei Technologies Co., Ltd.

WARNING

During the installation of PV strings and the inverter, the positive or negative terminals of PV strings may be short-circuited to ground if the power cables are not properly installed or routed. In this case, an AC or DC short circuit may occur and damage the inverter. The resulting device damage is not covered under any warranty.

CAUTION

Do not route cables near the air intake or exhaust vents of the equipment.

CAUTION

The components (such as power distribution boxes, circuit breakers, and cables) used for electrical connections shall comply with fire resistance and flame retardance standards (such as IEC 60670-1). The materials and structure shall meet fire safety requirements.

General Requirements

- Follow the procedures described in the document for installation, operation, and maintenance. Do not reconstruct or alter the equipment, add components, or change the installation sequence without permission.
- Obtain approval from the national or local electric utility company before connecting the equipment to the grid.
- Observe the power plant safety regulations, such as the operation and work ticket mechanisms.
- Install temporary fences or warning ropes and hang "No Entry" signs around the operation area to keep unauthorized personnel away from the area.
- Before installing or removing power cables, turn off the switches of the equipment and its upstream and downstream switches.
- Before performing operations on the equipment, check that all tools meet the requirements and record the tools. After the operations are complete, collect all of the tools to prevent them from being left inside the equipment.
- Before installing power cables, check that cable labels are correct and cable terminals are insulated.
- When installing the equipment, use a torque tool of a proper measurement range to tighten the screws. When using a wrench to tighten the screws, ensure that the wrench does not tilt and the torque error does not exceed 10% of the specified value.
- Ensure that bolts are tightened with a torque tool and marked in red and blue after double-check. Installation personnel mark tightened bolts in blue. Quality inspection personnel confirm that the bolts are tightened and then mark them in red. (The marks must cross the edges of the bolts.)

 Copyright © Huawei Technologies Co., Ltd.

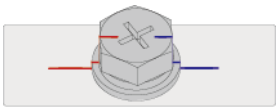

- If the equipment has multiple inputs, disconnect all the inputs and wait until the equipment is completely powered off before performing operations on the equipment.
- Before maintaining a downstream electrical or power distribution device, turn off the output switch on the power supply equipment.
- During equipment maintenance, attach "No switching on" labels near the upstream and downstream switches or circuit breakers as well as warning signs to prevent accidental connection. The equipment can be powered on only after troubleshooting is complete.
- Do not open equipment panels.
- Check equipment connections periodically, ensuring that all screws are securely tightened.
- Only qualified professionals can replace a damaged cable.
- Do not scrawl, damage, or block any labels or nameplates on the equipment. Promptly replace labels that have worn out.
- Do not use solvents such as water, alcohol, or oil to clean electrical components inside or outside of the equipment.

Grounding

- Ensure that the grounding impedance of the equipment complies with local electrical standards.
- Ensure that the equipment is connected permanently to the protective ground. Before operating the equipment, check its electrical connection to ensure that it is reliably grounded.
- Do not operate the equipment in the absence of a properly installed ground conductor.
- Do not damage the ground conductor.

Cabling Requirements

- When selecting, installing, and routing cables, follow local safety regulations and rules.
- When routing power cables, ensure that there is no coiling or twisting. Do not join or weld power cables. If necessary, use a longer cable.
- Ensure that all cables are properly connected and insulated, and meet specifications.
- Ensure that the cables are protected from mechanical stress, overheating, and corrosion.
- Ensure that cables are not squeezed, torn, warped, or whitened.
- Ensure that the slots and holes for routing cables are free from sharp edges, and that the positions where cables are routed through pipes or cable holes are equipped with cushion materials to prevent the cables from being damaged by sharp edges or burrs.

 Copyright © Huawei Technologies Co., Ltd.

- Ensure that cables of the same type are bound together neatly and straight and that the cable sheath is intact. When routing cables of different types, ensure that they are away from each other without entanglement and overlapping.
- Secure buried cables using cable supports and cable clips. Ensure that the cables in the backfill area are in close contact with the ground to prevent cable deformation or damage during backfilling.
- If the external conditions (such as the cable layout or ambient temperature) change, verify the cable usage in accordance with the IEC-60364-5-52 or local laws and regulations. For example, check that the current-carrying capacity meets requirements.
- When routing cables, reserve at least 30 mm clearance between the cables and heat-generating components or areas. This prevents deterioration or damage to the cable insulation layer.

1.3 Environment Requirements

DANGER

Do not expose the equipment to flammable or explosive gas or smoke. Do not perform any operation on the equipment in such environments.

DANGER

Do not store any flammable or explosive materials in the equipment area.

DANGER

Do not place the equipment near heat sources or fire sources, such as smoke, candles, heaters, or other heating devices. Overheating may damage the equipment or cause a fire.

WARNING

Install the equipment in an area far away from liquids. Do not install it under areas prone to condensation, such as under water pipes and air exhaust vents, or areas prone to water leakage, such as air conditioner vents, ventilation vents, or feeder windows of the equipment room. Ensure that no liquid enters the equipment to prevent faults or short circuits.

 Copyright © Huawei Technologies Co., Ltd.

WARNING

To prevent damage or fire due to high temperature, ensure that the ventilation vents or heat dissipation systems are not obstructed or covered by other objects while the equipment is running.

General Requirements

- Store the equipment according to the storage requirements. Equipment damage caused by unqualified storage conditions is not covered under the warranty.
- Keep the installation and operating environments of the equipment within the allowed ranges. Otherwise, its performance and safety will be compromised.
- The operating temperature range provided in the equipment's technical specifications refers to the ambient temperatures in equipment's installation environment.
- Do not install, use, or operate outdoor equipment and cables (including but not limited to moving equipment, operating equipment and cables, inserting connectors to or removing connectors from signal ports connected to outdoor facilities, working at heights, performing outdoor installation, and opening doors) in harsh weather conditions such as lightning, rain, snow, and level 6 or stronger wind.
- Do not install the equipment in an environment with dust, smoke, volatile or corrosive gases, infrared and other radiations, organic solvents, or salty air.
- Do not install the equipment in an environment with conductive metal or magnetic dust.
- Do not install the equipment in an area conducive to the growth of microorganisms such as fungus or mildew.
- Do not install the equipment in an area with strong vibration, noise, or electromagnetic interference.
- Ensure that the site complies with local laws, regulations, and related standards.
- Ensure that the ground in the installation environment is solid, free from spongy or soft soil, and not prone to subsidence. The site must not be located in a low-lying land prone to water or snow accumulation, and the horizontal level of the site must be above the highest water level of that area in history.
- Do not install the equipment in a position that may be submerged in water.
- If the equipment is installed in a place with abundant vegetation, in addition to routine weeding, harden the ground underneath the equipment using cement or gravel (the area shall be greater than or equal to 3 m x 2.5 m).
- Do not install the equipment outdoors in salt-affected areas because it may be corroded. A salt-affected area refers to the region within 500 m of the coast or prone to sea breeze. Regions prone to sea breeze vary with weather conditions (such as typhoons and monsoons) or terrains (such as dams and hills).
- Before installation, operation, and maintenance, clean up any water, ice, snow, or other foreign objects on the top of the equipment.

 Copyright © Huawei Technologies Co., Ltd.

- When installing the equipment, ensure that the installation surface is solid enough to bear the weight of the equipment.
- After installing the equipment, remove the packing materials such as cartons, foam, plastics, and cable ties from the equipment area.

1.4 Mechanical Safety

WARNING

Ensure that all necessary tools are ready and inspected by a professional organization. Do not use tools that have signs of scratches or fail to pass the inspection or whose inspection validity period has expired. Ensure that the tools are secure and not overloaded.

WARNING

Do not drill holes into the equipment. Doing so may affect the sealing performance and electromagnetic containment of the equipment and damage components or cables inside. Metal shavings from drilling may short-circuit boards inside the equipment.

General Requirements

- Repaint any paint scratches caused during equipment transportation or installation in a timely manner. Equipment with scratches must not be exposed for an extended period of time.
- Do not perform operations such as arc welding and cutting on the equipment without evaluation by the Company.
- Do not install other devices on the top of the equipment without evaluation by the Company.
- When performing operations over the top of the equipment, take measures to protect the equipment against damage.
- Use correct tools and operate them in the correct way.

Moving Heavy Objects

- Be cautious to prevent injury when moving heavy objects.

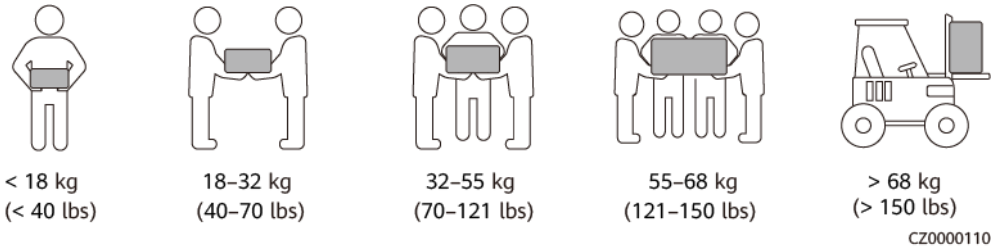

- If multiple persons need to move a heavy object together, determine the manpower and work division with consideration of height and other conditions to ensure that the weight is equally distributed.

 Copyright © Huawei Technologies Co., Ltd.

- If two persons or more move a heavy object together, ensure that the object is lifted and landed simultaneously and moved at a uniform pace under the supervision of one person.
- Wear personal protective gears such as protective gloves and shoes when manually moving the equipment.
- To move an object by hand, approach to the object, squat down, and then lift the object gently and stably by the force of the legs instead of your back. Do not lift it suddenly or turn your body around.
- Do not quickly lift a heavy object above your waist. Place the object on a workbench that is half-waist high or any other appropriate place, adjust the positions of your palms, and then lift it.
- Move a heavy object stably with balanced force at an even and low speed. Put down the object stably and slowly to prevent any collision or drop from scratching the surface of the equipment or damaging the components and cables.
- When moving a heavy object, be aware of the workbench, slope, staircase, and slippery places. When moving a heavy object through a door, ensure that the door is wide enough to move the object and avoid bumping or injury.
- When transferring a heavy object, move your feet instead of turning your waist around. When lifting and transferring a heavy object, ensure that your feet point to the target direction of movement.
- When transporting the equipment using a pallet truck or forklift, ensure that the tynes are properly positioned so that the equipment does not topple. Before moving the equipment, secure it to the pallet truck or forklift using ropes. When moving the equipment, assign dedicated personnel to take care of it.
- Choose sea, roads in good conditions, or airplanes for transportation. Do not transport the equipment by railway. Avoid tilt or jolt during transportation.

Using Ladders

- Use wooden or insulated ladders when you need to perform live-line working at heights.
- Platform ladders with protective rails are preferred. Single ladders are not recommended.
- Before using a ladder, check that it is intact and confirm its load bearing capacity. Do not overload it.
- Ensure that the ladder is securely positioned and held firm.

CZ00000107

- When climbing up the ladder, keep your body stable and your center of gravity between the side rails, and do not overreach to the sides.
- When a step ladder is used, ensure that the pull ropes are secured.
- If a single ladder is used, the recommended angle for the ladder against the floor is 75 degrees, as shown in the following figure. A square can be used to measure the angle.

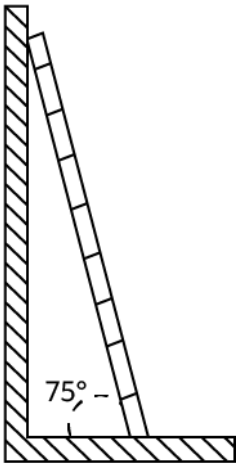

PI02SC0008

- If a single ladder is used, ensure that the wider end of the ladder is at the bottom, and take protective measures to prevent the ladder from sliding.
- If a single ladder is used, do not climb higher than the fourth rung of the ladder from the top.
- If you use a single ladder to climb up to a platform, ensure that the ladder is at least 1 m higher than the platform.

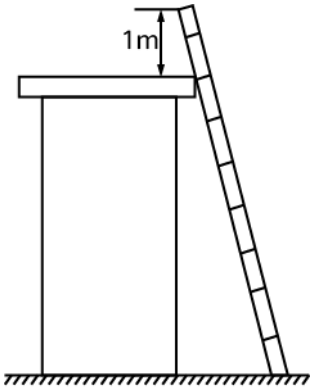

PI02SC0009

Hoisting

- Only trained and qualified personnel are allowed to perform hoisting operations.
- Install temporary warning signs or fences to isolate the hoisting area.
- Ensure that the foundation where hoisting is performed meets the load-bearing requirements.
- Before hoisting objects, ensure that hoisting tools are firmly secured onto a fixed object or wall that meets the load-bearing requirements.

 Copyright © Huawei Technologies Co., Ltd.

- During hoisting, do not stand or walk under the crane or the hoisted objects.
- Do not drag steel ropes and hoisting tools or bump the hoisted objects against hard objects during hoisting.
- Ensure that the angle between two hoisting ropes is no more than 90 degrees, as shown in the following figure.

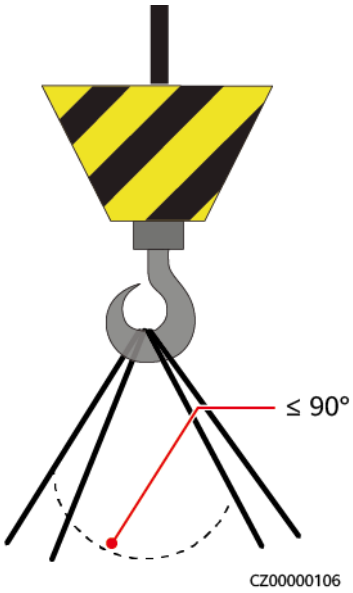

Drilling Holes

- Obtain consent from the customer and contractor before drilling holes.
- Wear protective equipment such as safety goggles and protective gloves when drilling holes.
- To avoid short circuits or other risks, do not drill holes into buried pipes or cables.
- When drilling holes, protect the equipment from shavings. After drilling, clean up any shavings.

 Copyright © Huawei Technologies Co., Ltd.

2 Product Introduction

2.1 Overview

Function

The SUN2000-(2KTL-6KTL)-L1 is a single-phase grid-tied string inverter that converts the DC power generated by PV strings into AC power and feeds the electricity into the power grid.

Model

This document involves the following product models:

- SUN2000-2KTL-L1
- SUN2000-3KTL-L1
- SUN2000-3.68KTL-L1
- SUN2000-4KTL-L1
- SUN2000-4.6KTL-L1
- SUN2000-5KTL-L1
- SUN2000-6KTL-L1

Figure 2-1 Model number (using SUN2000-5KTL-L1 as an example)

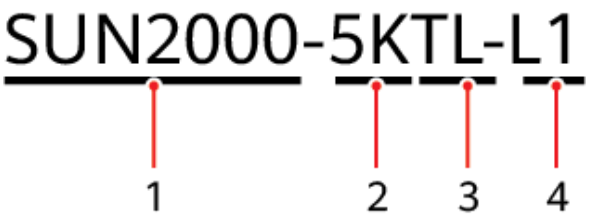

 Copyright © Huawei Technologies Co., Ltd.

Table 2-1 Model description

No.	Meaning	Value
1	Series name	SUN2000: grid-tied solar inverter
2	Power level	• 2K: The power level is 2 kW. • 3K: The power level is 3 kW. • 3.68K: The power level is 3.68 kW. • 4K: The power level is 4 kW. • 4.6K: The power level is 4.6 kW. • 5K: The power level is 5 kW. • 6K: The power level is 6 kW.
3	Topology	TL: transformerless
4	Design code	L1: residential

NOTE

SUN2000-3/4/5/6KTL-L1 are intended for sales in China Region. These models cannot work properly outside China Region.

Networking Application

The SUN2000 applies to residential rooftop grid-tied systems. Such systems consist of PV strings, grid-tied inverters, AC switches, and power distribution units (PDUs).

Smart Dongle Networking

Figure 2-2 Single-inverter scenario (the components in dashed boxes are optional)

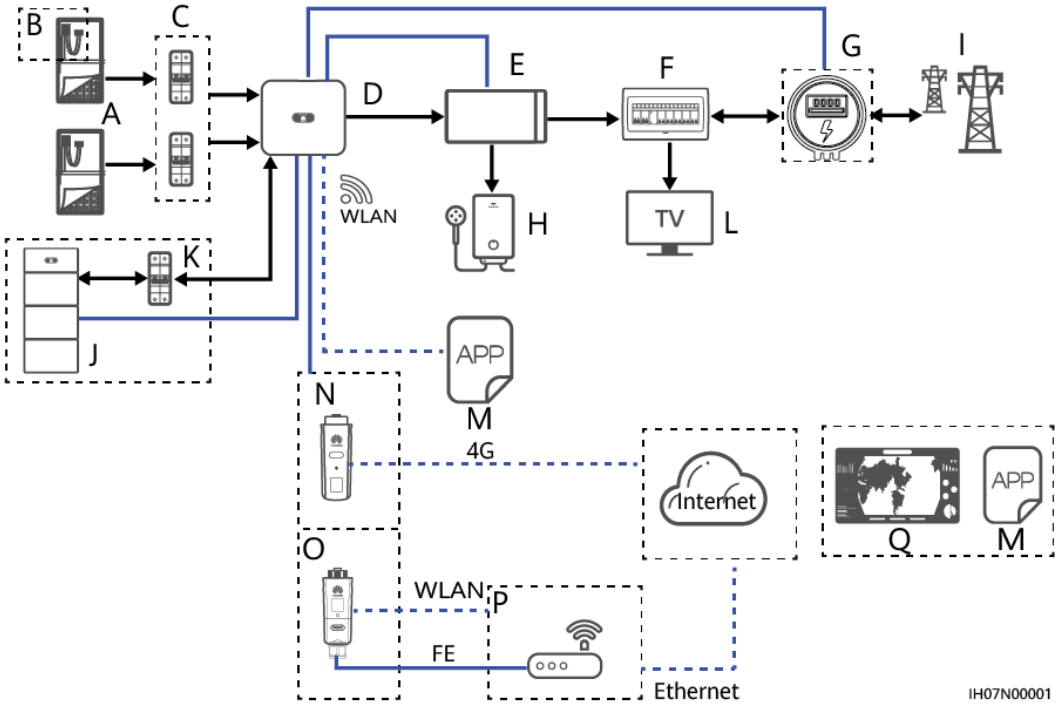

Figure 2-3 Inverter cascading scenario (the components in dashed boxes are optional)

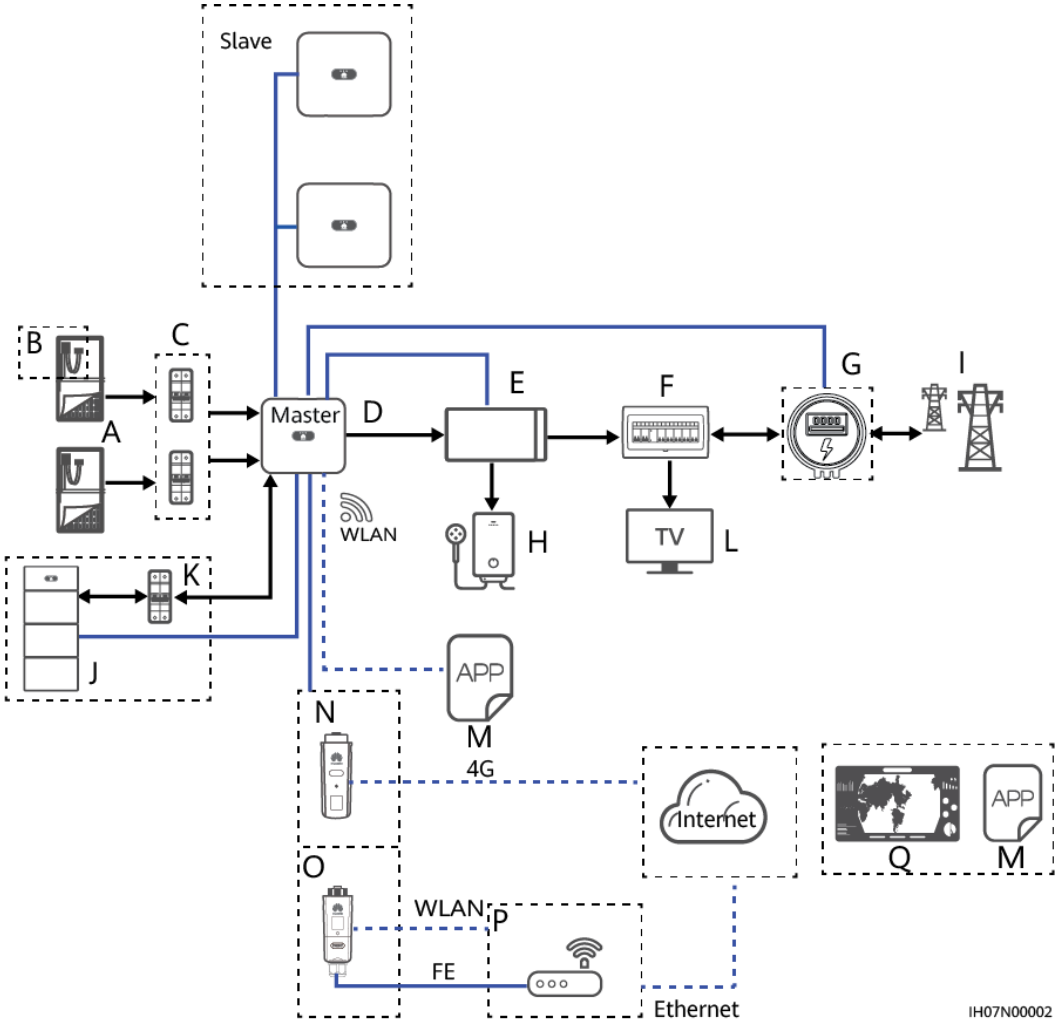

(A) PV string	(B) Smart PV optimizer	(C) DC switch
(D) SUN2000	(E) Backup Box	(F) Residential PDU
(G) Power meter	(H) Critical load	(I) Power grid
(J) Battery	(K) Battery switch	(L) Household load
(M) App	(N) 4G Smart Dongle	(O) WLAN-FE Smart Dongle
(P) Router	(Q) Management System	

NOTE

- → indicates the power flow direction, —— indicates the signal line, and ····· indicates the wireless communication.
- The SUN2000-(2KTL-6KTL)-L1 can connect to only one LUNA2000-S1 ESS in the Smart Dongle networking or inverter WLAN direct connection scenario, and can connect to a maximum of two LUNA2000-S1 ESSs in the SmartAssistant networking scenario. When the inverter is connected to two ESSs, the FE network cable between the ESSs must be connected, and an ESS needs to be connected to the SmartAssistant or router through an FE network cable.
- In the inverter cascading scenario, only one power meter (G in the figure) can be connected to the master inverter.
- In the inverter cascading scenario, the inverters connected to the power grid must meet the local power grid requirements.
- For details about Smart Dongle networking, see **Residential Solution Mapping Relationship and Wiring Guide**.

CAUTION

- The off-grid load output port of the Backup Box cannot be directly connected to the power grid. Otherwise, the off-grid function cannot be used as the Backup Box will shut down due to overload.
- Motor loads are not supported in off-grid operation. The startup power of a motor load is several times its rated power and thus may exceed the load capacity of the inverter, resulting in startup failure.

 Copyright © Huawei Technologies Co., Ltd.

SmartAssistant Networking

Figure 2-4 SmartAssistant networking (the components in dashed boxes are optional)

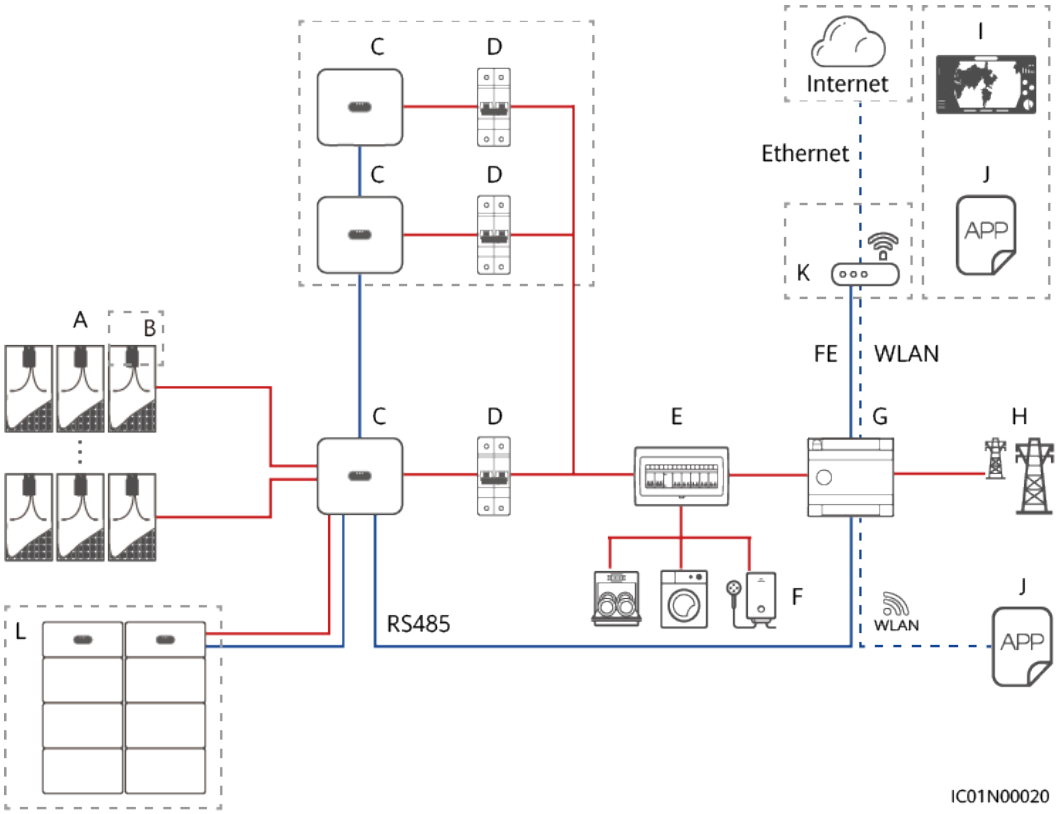

(A) PV string	(B) Smart PV Optimizer	(C) Inverter
(D) AC switch	(E) AC PDU	(F) Load
(G) SmartAssistant	(H) Power grid	(I) Management system
(J) App	(K) Router	(L) Battery

NOTE

- — indicates a power cable, — indicates a signal cable, and - - - indicates wireless communication.
- In the inverter cascading scenario, the inverters connected to the power grid must meet the local power grid requirements.
- For details about SmartAssistant networking, see **Residential Solution Mapping Relationship and Wiring Guide**.

 Copyright © Huawei Technologies Co., Ltd.

NOTICE

The SUN2000-(2KTL-6KTL)-L1 can connect to only one LUNA2000-S1 ESS in the Smart Dongle networking or inverter WLAN direct connection scenario, and can connect to a maximum of two LUNA2000-S1 ESSs in the SmartAssistant networking scenario. When the inverter is connected to two ESSs, the FE network cable between the ESSs must be connected, and an ESS needs to be connected to the SmartAssistant or router through an FE network cable.

Smart Guard Networking

Figure 2-5 Smart Guard networking (the components in dashed boxes are optional)

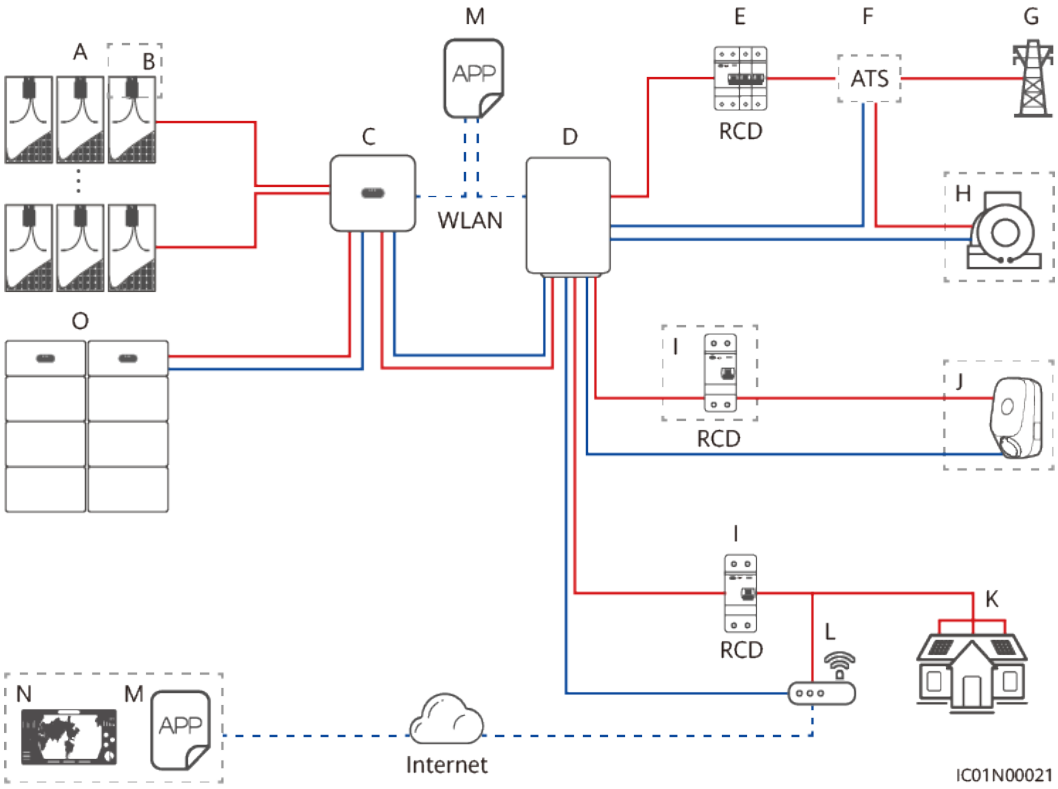

(A) PV string	(B) Smart PV Optimizer	(C) Inverter
(D) Smart Guard	(E) Main circuit breaker (RCD)	(F) ATS
(G) Power grid	(H) Generator	(I) Residual current device (RCD)
(J) Non-backup load	(K) Backup load	(L) Router
(M) App	(N) Management system	(O) Battery

Copyright © Huawei Technologies Co., Ltd.

NOTE

- — indicates a power cable, — indicates a signal cable, and - - - indicates wireless communication.
- For details about Smart Guard networking, see **Residential Solution Mapping Relationship and Wiring Guide**.

NOTE

Inverters cannot be cascaded in the Smart Guard networking.

Compatibility with Third-Party Systems

Huawei inverters are compatible with third-party inverters or third-party energy storage systems (ESSs).

Figure 2-6 Networking with third-party systems

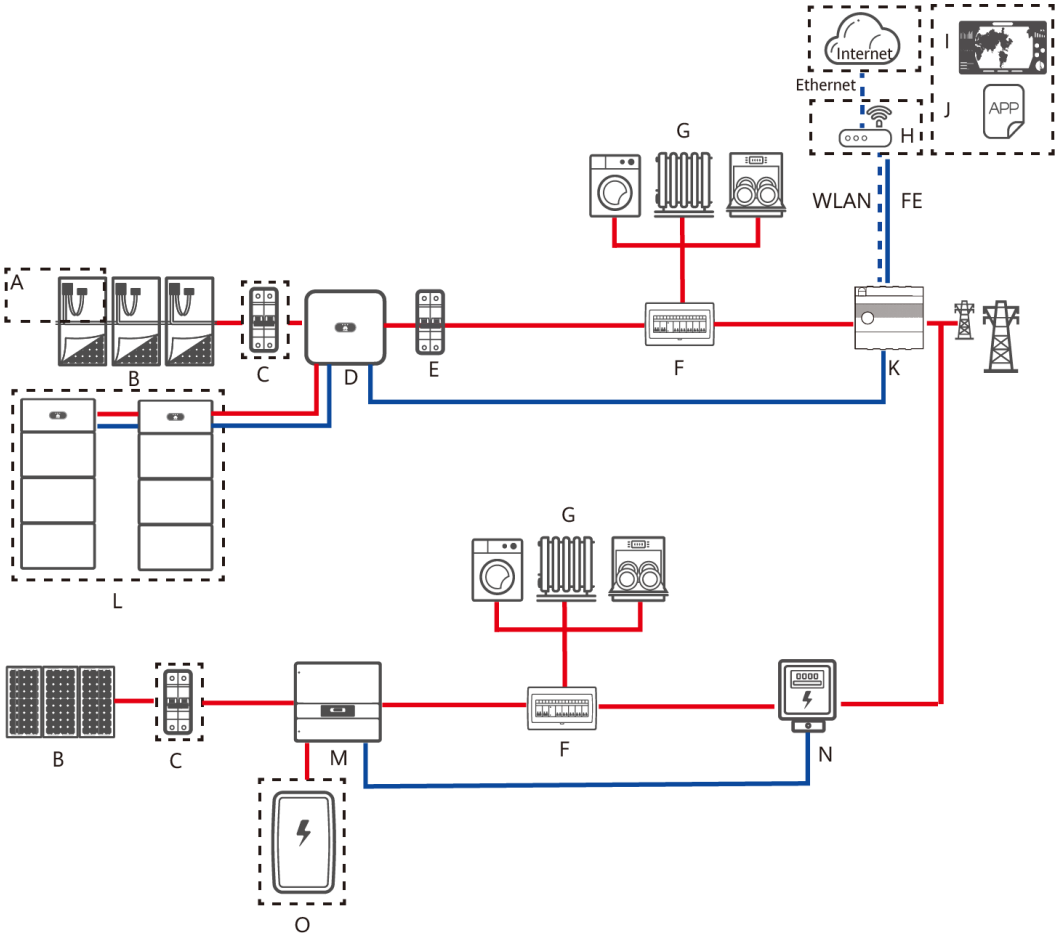

(A) Optimizer	(B) PV string	(C) DC switch
(D) Huawei smart PV inverter	(E) AC switch	(F) AC power distribution unit (PDU)
(G) Load	(H) Router	(I) Management system

(J) App	(K) SmartAssistant	(L) LUNA2000
(M/O) Third-party inverter or third-party ESS	(N) Power meter	

Supported Earthing Systems

The SUN2000 supports the TN-S, TN-C, TN-C-S, and TT earthing systems. In the TT earthing system, the N-to-PE voltage must be less than 30 V.

Figure 2-7 Earthing systems

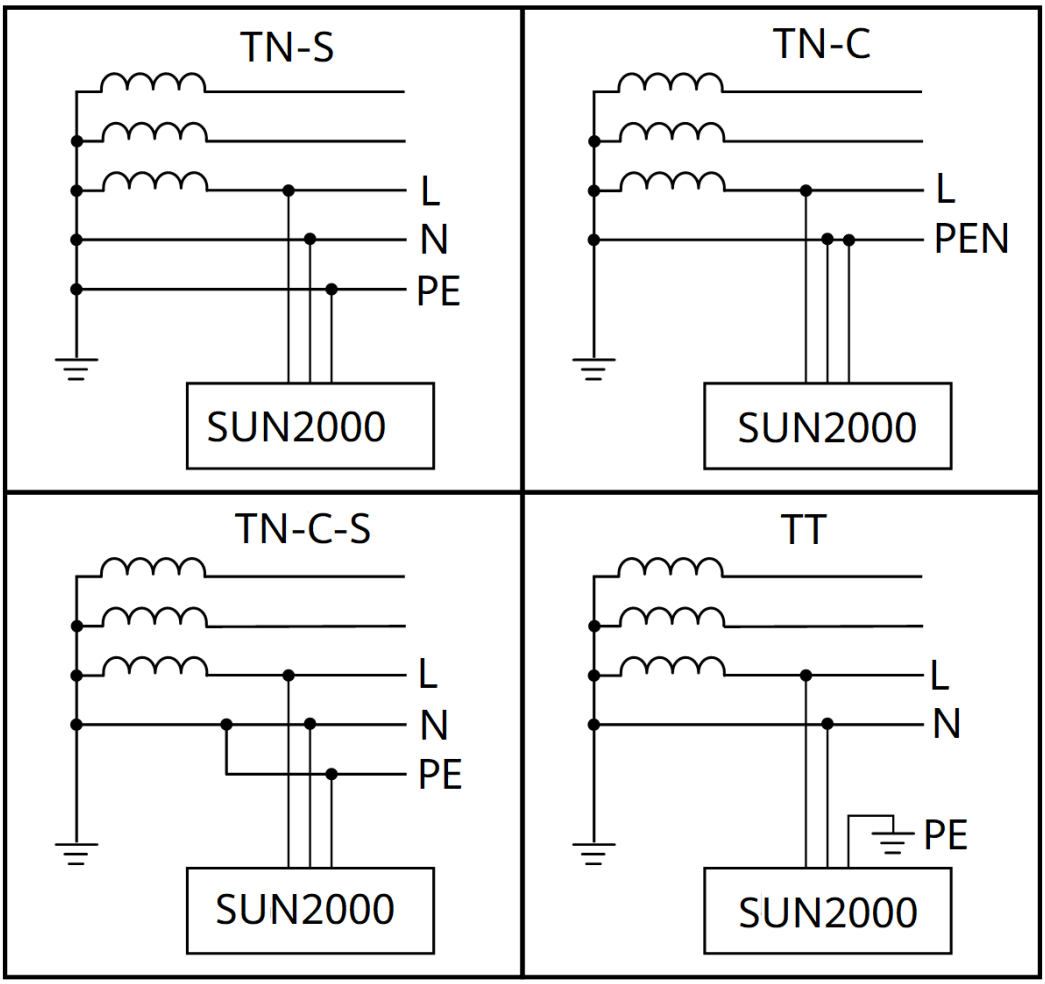

 Copyright © Huawei Technologies Co., Ltd.

2.2 Component Description

Appearance

Figure 2-8 Appearance

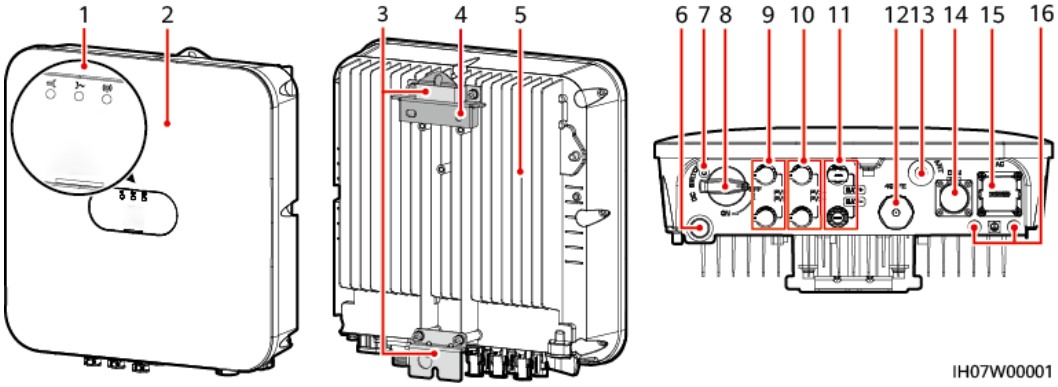

(1) LED indicators	(2) Front panel
(3) Hanging kit	(4) Mounting bracket
(5) Heat sink	(6) Ventilation valve
(7) DC switch locking screw hole[a]	(8) DC switch[b] (DC SWITCH)
(9) DC input terminals (PV1+/PV1–)	(10) DC input terminals (PV2+/PV2–)
(11) Battery terminals (BAT+/BAT–)	(12) Smart Dongle port (4G/FE)
(13) Antenna port (ANT)	(14) Communications port (COM)
(15) AC output port (AC)	(16) Ground point

NOTE

- Note a: The DC switch locking screw is used to lock the DC switch to prevent accidental startup. It is delivered with the inverter.
- Note b: DC input terminals PV1 and PV2 are controlled by the DC switch.

Copyright © Huawei Technologies Co., Ltd.

2.3 Label Description

Enclosure Labels

Table 2-2 Enclosure label description

Icon	Name	Meaning
	Burn warning	Do not touch a running inverter because the enclosure is hot when the inverter is running.
	Delayed discharge	• High voltage exists after the inverter is powered on. Only qualified and trained electrical technicians are allowed to perform operations on the inverter. • Residual voltage exists after the inverter is powered off. It takes 5 minutes for the inverter to discharge to the safe voltage.
	Refer to documentation	Reminds operators to refer to the documents delivered the inverter.
	Grounding	Indicates the position for connecting the protective earthing (PE) cable.
	Operation warning	Do not remove the connector or antenna when the inverter is running.

Copyright © Huawei Technologies Co., Ltd.

Icon	Name	Meaning
WARNING High touch current, earth connection essential before connecting supply. 大接触电流！接通电源前须先接地。	Grounding warning	Ground the inverter before powering it on.
(1P)PN/ITEM:XXXXXXXX Y (32P)Model:XXXXXXXX (S)SN:XXXXXXXXXXXX MADE IN CHINA	Serial number (SN)	Indicates the inverter SN.
MAC: xxxxxxxxxxxx	Media access control (MAC) address	Indicates the MAC address.
	QR code for logging in to the inverter WLAN	Scan the QR code to connect to the Huawei inverter WLAN (Android) or obtain the WLAN login password (iOS).

NOTE

The labels are for reference only.

Nameplate

Figure 2-9 Nameplate (using SUN2000-5KTL-L1 as an example)

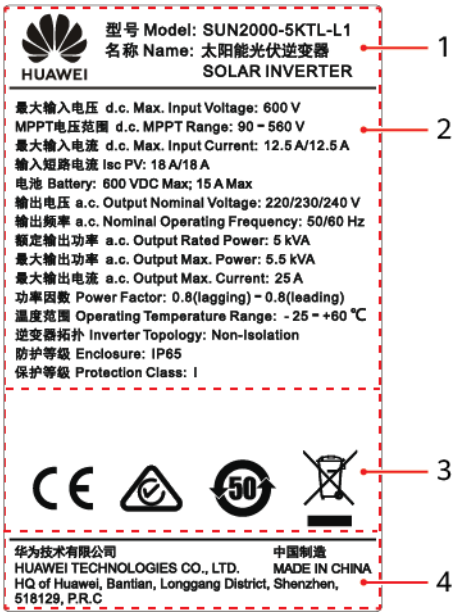

Copyright © Huawei Technologies Co., Ltd.

(1) Trademark and model

(2) Key technical specifications

(3) Compliance symbols

(4) Company name and country of origin

NOTE

The nameplate figure is for reference only.

2.4 Working Principles

Schematic Diagram

The inverter receives inputs from up to two PV strings. Then the inputs are grouped into two MPPT routes inside the inverter to track the maximum power point of the PV strings. The DC power is then converted into single-phase AC power through an inverter circuit. Surge protection is supported on both the DC and AC sides.

The inverter uses a reserved battery port for energy storage expansion. Battery performs charging and discharging operations according to the battery working mode.

Figure 2-10 Schematic diagram

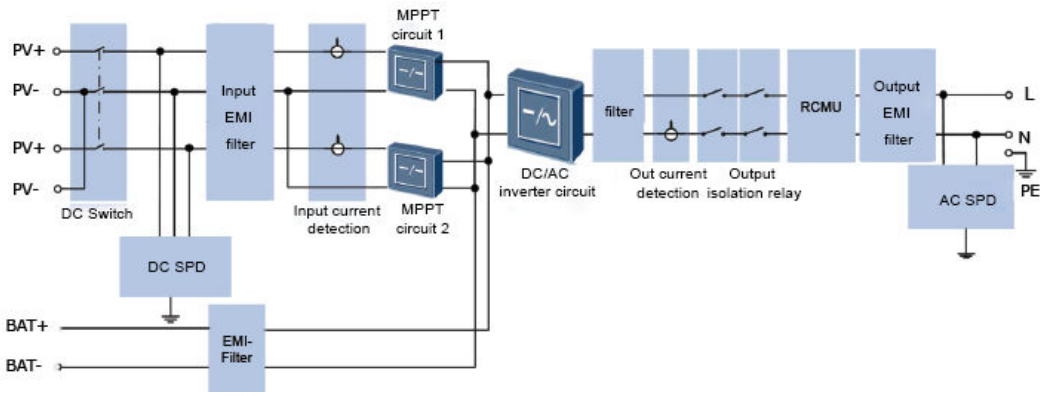

Working Mode

Figure 2-11 Working modes

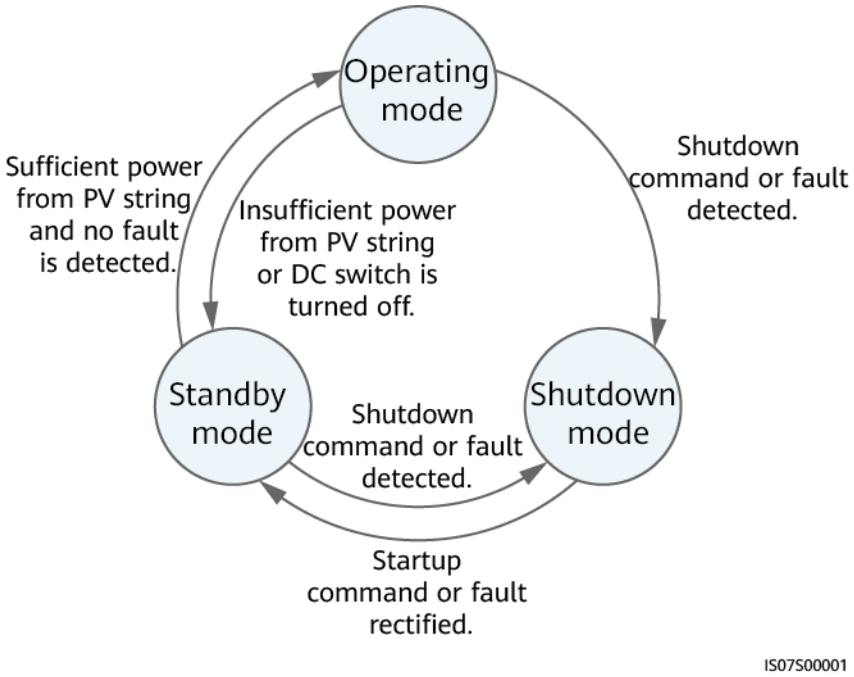

Table 2-3 Working mode description

Working mode	Description
Standby mode	The inverter enters Standby mode when the external environment does not meet the requirements for starting the inverter. In Standby mode: ● The inverter continuously detects its operation status. Once the operating conditions are met, the inverter enters Operating mode. ● If the inverter detects a shutdown command or a fault after startup, it enters Shutdown mode.
Operating mode	In Operating mode: ● The inverter converts DC power from PV strings into AC power and feeds the power to the power grid. ● The inverter tracks the maximum power point to maximize the PV string output power. ● If the inverter detects a shutdown command or a fault, it enters Shutdown mode. ● If the inverter detects that the output power of PV strings does not meet the requirements for grid-tied power generation, it enters Standby mode.

 Copyright © Huawei Technologies Co., Ltd.

Working mode	Description
Shutdown mode	• In Standby or Operating mode, if the inverter detects a shutdown command or a fault, it enters Shutdown mode. • In Shutdown mode, if the inverter detects that the fault is rectified or the startup command is executed, the inverter enters Standby mode.

 Copyright © Huawei Technologies Co., Ltd.

3 Storage Requirements

The following requirements should be met if the inverter is not put into use directly:

- Do not unpack the inverter.
- Keep the storage temperature at –40°C to +70°C and the humidity at 5%–95% RH.
- The product should be stored in a clean and dry place and be protected from dust and water vapor corrosion.
- A maximum of eight inverters can be stacked. To avoid personal injury or device damage, stack inverters with caution to prevent them from falling over.
- During the storage period, check the inverter periodically. (It is recommended that the check is performed every three months.) Replace the packing materials that are damaged by insects or rodents in a timely manner.
- If the inverter has been stored for more than two years, it must be checked and tested by professionals before being put into use.

 Copyright © Huawei Technologies Co., Ltd.

4 System Installation

4.1 Checking Before Installation

Outer Packing Materials

Before unpacking the inverter, check the outer packing materials for damage, such as holes and cracks, and check the inverter model. If any damage is found or the inverter model is not what you requested, do not unpack the package and contact your supplier as soon as possible.

NOTE

You are advised to remove the packing materials within 24 hours before installing the inverter.

Package Contents

NOTICE

- After placing the equipment in the installation position, unpack it with care to prevent scratches. Keep the equipment stable during unpacking.

After unpacking the inverter, check that the contents are intact and complete. If any damage is found or any component is missing, contact your supplier.

NOTE

For details about the number of contents, see the *Packing List* in the packing case.

 Copyright © Huawei Technologies Co., Ltd.

4.2 Preparing Tools and Instruments

Type	Tools and Instruments		
Installation	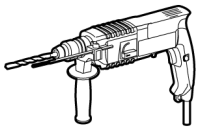 Hammer drill (with a drill bit of 8 mm)	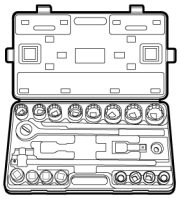 Torque socket wrench	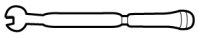 Torque wrench
	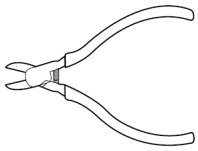 Diagonal pliers	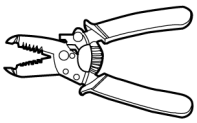 Wire strippers	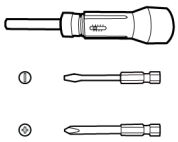 Torque screwdriver
	Rubber mallet	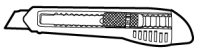 Utility knife	Cable cutter
	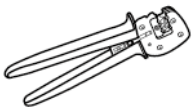 Crimping tool (model: PV-CZM-22100/19100)	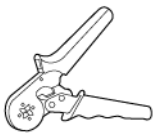 Cord end terminal crimper	Disassembly and Assembly Tool (model: PV-MS-HZ open-end wrench)
	Cable tie	Vacuum cleaner	Multimeter (DC voltage measurement range ≥ 600 V DC)

Copyright © Huawei Technologies Co., Ltd.

Type	Tools and Instruments		
	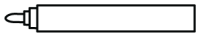 Marker	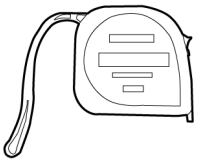 Steel measuring tape	Level
	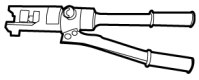 Hydraulic pliers	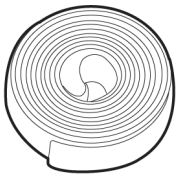 Heat-shrink tubing	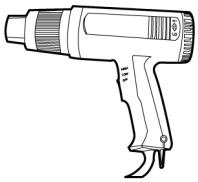 Heat gun
Personal protective equipment (PPE)	Insulated gloves	Protective gloves	Dust mask
	Safety boots	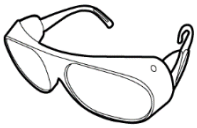 Safety goggles	-

4.3 Determining the Installation Position

Basic Requirements

- The inverter is protected to IP65 and can be installed indoors or outdoors.
- Do not install the inverter in a place where personnel are easy to come into contact with its enclosure and heat sink, because these parts are extremely hot during operation.
- Do not install the inverter near flammable or explosive materials.
- Do not install the inverter at a place within children's reach.
- The inverter will be corroded in salt areas, and the salt corrosion may cause fire. Do not install the inverter outdoors in salt areas. A salt area refers to the region within 500 meters from the coast or prone to sea breeze. The regions

 Copyright © Huawei Technologies Co., Ltd.

prone to sea breeze vary with weather conditions (such as typhoons and monsoons) or terrains (such as dams and hills).

Installation Environment Requirements

- The inverter must be installed in a well-ventilated environment to ensure good heat dissipation.
- When the inverter is installed under direct sunlight, the power may be derated due to the temperature rise.
- You are advised to install the inverter in a sheltered place or install an awning over it.

Mounting Structure Requirements

- The mounting structure where the inverter is installed must be fire resistant.
- Do not install the inverter on flammable building materials.
- Ensure that the installation surface is solid enough to bear the weight of the inverter.
- In residential areas, do not install the inverter on plaster board walls or walls made of similar materials with a weak sound insulation performance because the noise generated by the inverter may interfere with residents.

Installation Angle Requirements

The inverter can be wall-mounted or pole-mounted. The installation angle requirements are as follows:

- Install the inverter vertically or at a maximum back tilt of 15 degrees to facilitate heat dissipation.
- Do not install the inverter at forward tilted, excessive back tilted, side tilted, horizontal, or upside down positions.

 Copyright © Huawei Technologies Co., Ltd.

Figure 4-1 Installation angle

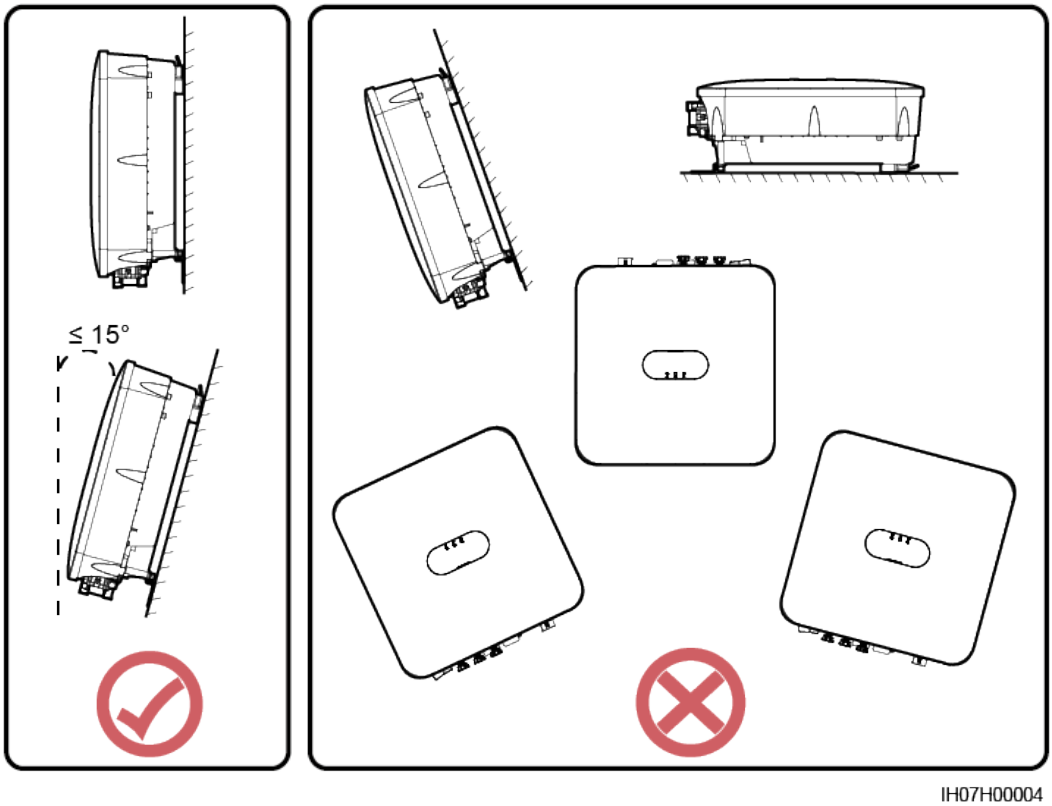

Installation Space Requirements

- Reserve enough clearance around the inverter to ensure sufficient space for installation and heat dissipation.

Figure 4-2 Installation space

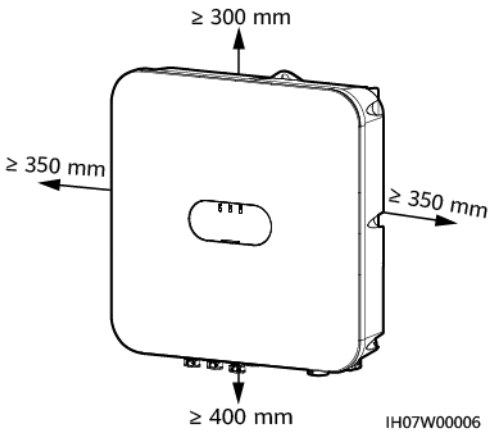

- When installing multiple inverters, install them in horizontal mode if sufficient space is available and install them in triangle mode if no sufficient space is available. Stacked installation is not recommended.

Figure 4-3 Horizontal installation mode (recommended)

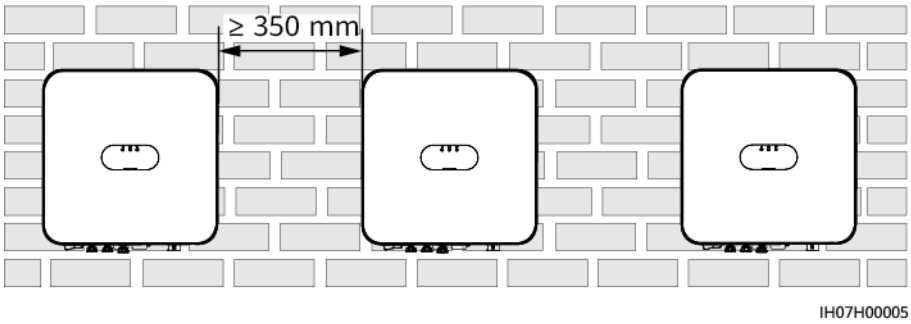

Figure 4-4 Triangle installation mode (recommended)

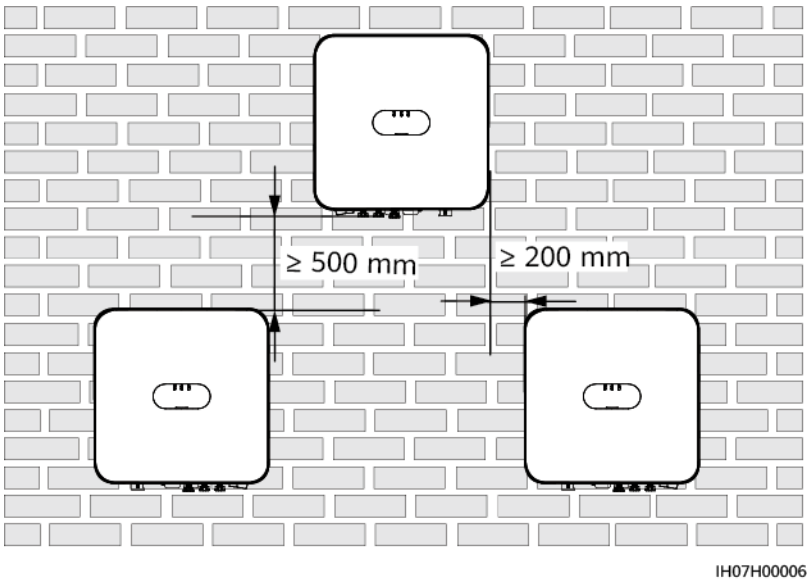

Figure 4-5 Stacked installation mode (not recommended)

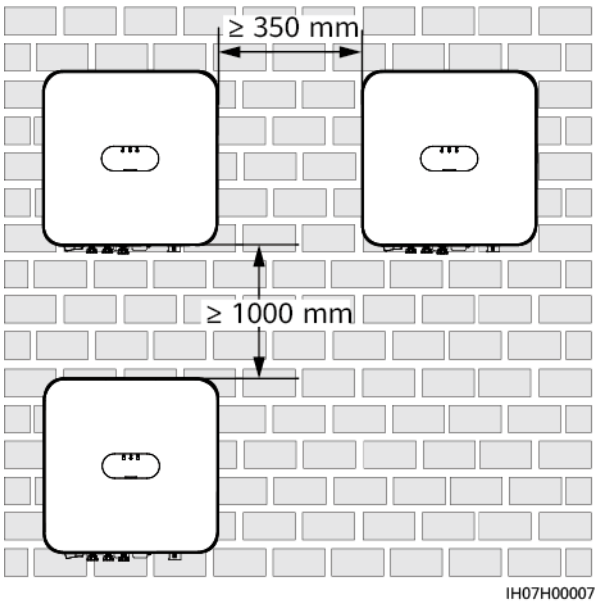

NOTE

The installation figures are for reference only and are irrelevant to the inverter cascading scenario.

4.4 Moving a Inverter

Procedure

Step 1 Hold the handles on both sides of the inverter, lift the inverter from the packing case, and transport it to the installation position.

CAUTION

- Move the inverter with care to prevent device damage and personal injury.
- Do not use the wiring terminals and ports at the bottom to support any weight of the inverter.
- When you need to temporally place the inverter on the ground, use foam, paper, or other protection material to prevent damage to its enclosure.

Figure 4-6 Moving a inverter

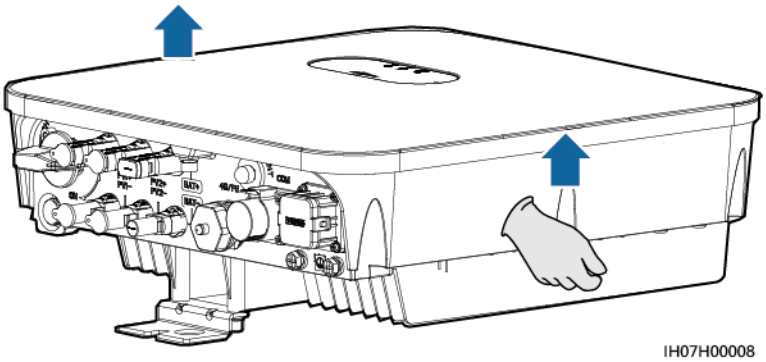

----End

4.5 Installing a Inverter

Installation Precautions

Figure 4-7 shows the dimensions of mounting holes for the Inverter.

Figure 4-7 Mounting bracket dimensions

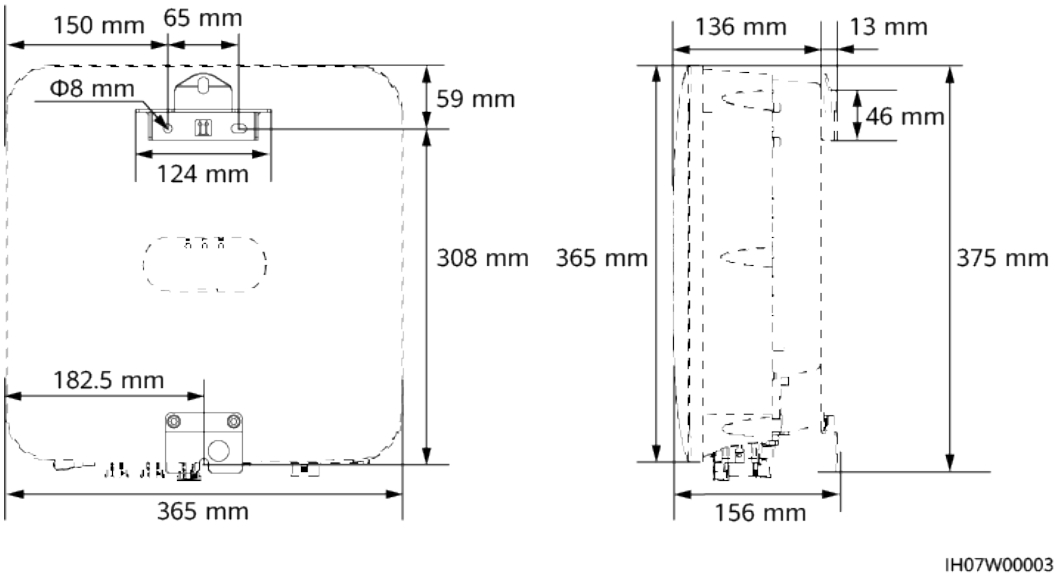

4.5.1 Wall-Mounted Installation

Procedure

Step 1 Determine the positions for drilling holes using the marking-off template. Level the positions of mounting holes using a level, and mark the positions with a marker.

Step 2 Secure the mounting bracket.

DANGER

When drilling holes, avoid the water pipes and power cables buried in the wall.

NOTE

- M6x60 expansion bolts are delivered with the inverter. If the length and amount of the bolts do not meet installation requirements, prepare M6 stainless steel expansion bolts by yourself.
- The expansion bolts delivered with the inverter are used for solid concrete walls. For other types of walls, prepare bolts by yourself and ensure that the wall meets the load bearing requirements of the inverter.

Figure 4-8 Expansion bolt composition

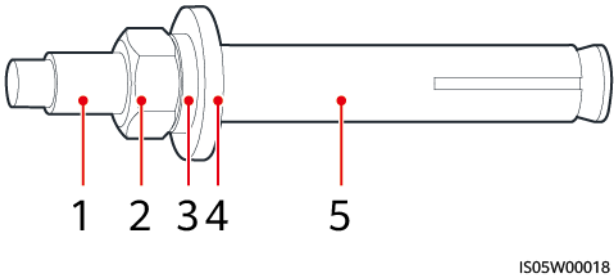

Copyright © Huawei Technologies Co., Ltd.

(1) Bolt (2) Nut (3) Spring washer

(4) Flat washer (5) Expansion sleeve

NOTICE

- To prevent dust inhalation or contact with eyes, wear safety goggles and a dust mask when drilling holes.
- Wipe away any dust in or around the holes and measure the hole distances. If the holes are inaccurately positioned, drill holes again.
- Level the head of the expansion sleeve with the concrete wall after removing the nut, spring washer, and flat washer. Otherwise, the mounting bracket will not be securely installed on the wall.
- Loosen the nut, spring washer, and flat washer of the expansion bolt at the bottom.

Figure 4-9 Installing expansion bolts

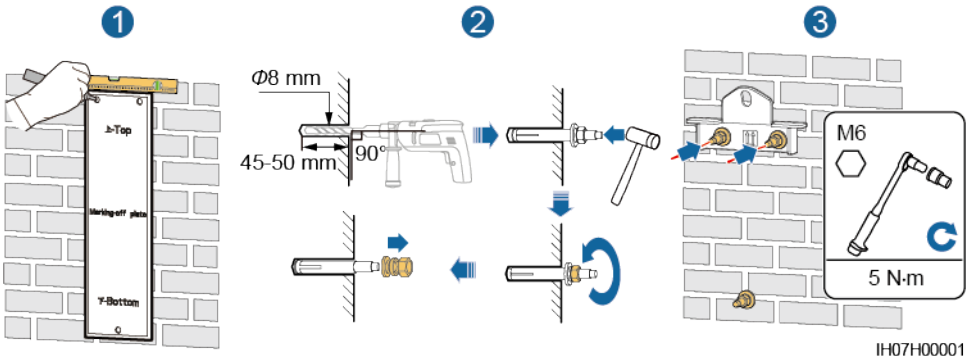

Step 3 (Optional) Install the locking screw for the DC switch.

Figure 4-10 Installing a locking screw for the DC switch

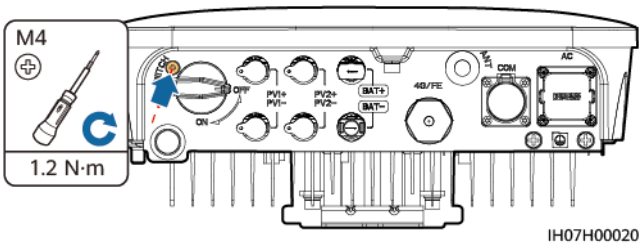

Step 4 Install the inverter on the mounting bracket.

Step 5 Tighten the nuts.

 Copyright © Huawei Technologies Co., Ltd.

Figure 4-11 Tightening nuts

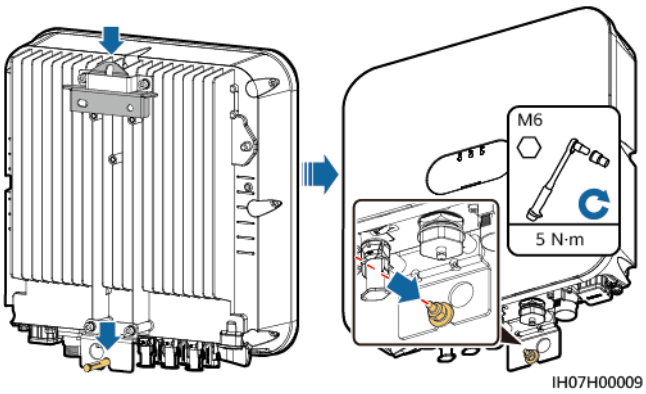

Step 6 (Optional) Install an anti-theft lock.

NOTICE

- Prepare an anti-theft lock suitable for the lock hole diameter (Φ10 mm).
- An outdoor waterproof lock is recommended.
- Keep the key to the anti-theft lock.

Figure 4-12 Installing an anti-theft lock

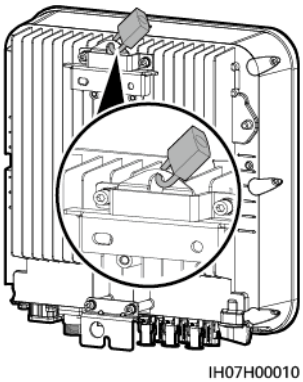

----End

4.5.2 Support-Mounted Installation

Procedure

Step 1 Determine the positions for drilling holes using the marking-off template, and then mark the positions with a marker.

 Copyright © Huawei Technologies Co., Ltd.

Figure 4-13 Determining hole positions

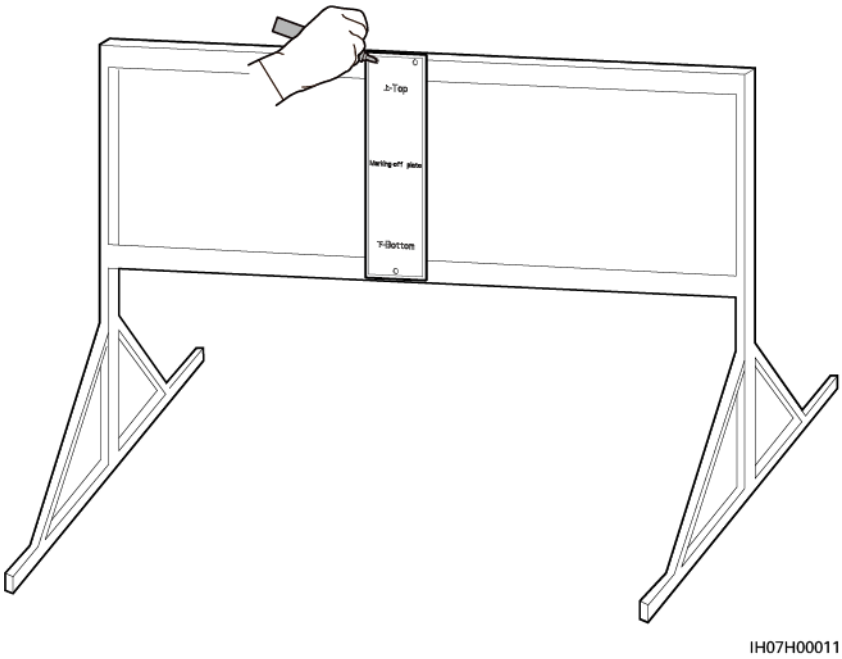

Step 2 Drill holes using a hammer drill.

NOTE

You are advised to apply anti-rust paint on the hole positions for protection.

Figure 4-14 Drilling holes

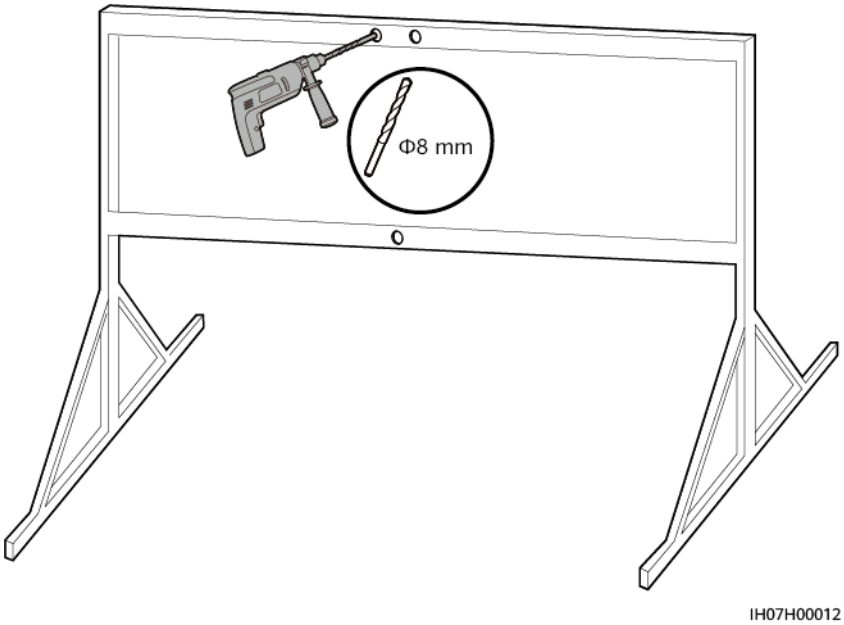

Step 3 Secure the mounting bracket.

Figure 4-15 Secure the mounting bracket

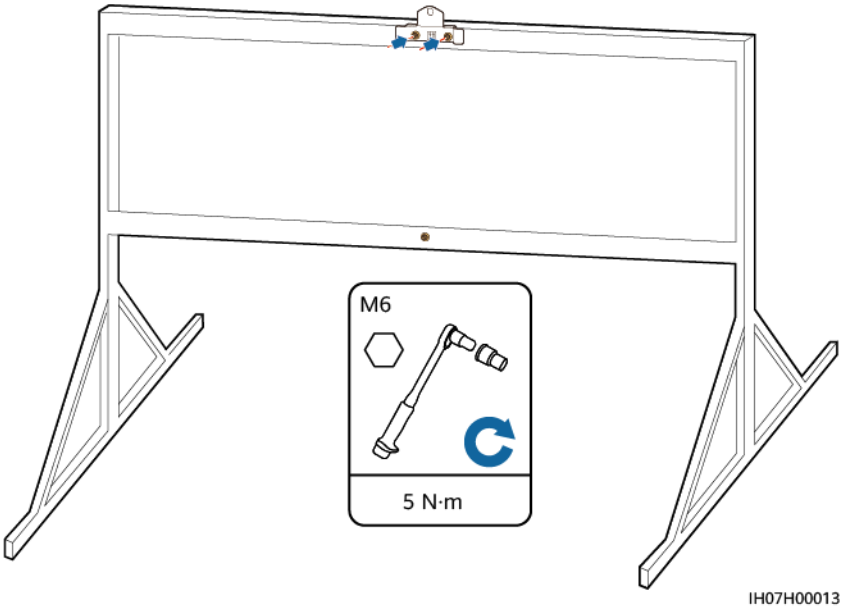

NOTE

Prepare bolt assemblies based on the hole diameter of the mounting bracket.

Step 4 (Optional) Install the locking screw for the DC switch.

Figure 4-16 Installing a locking screw for the DC switch

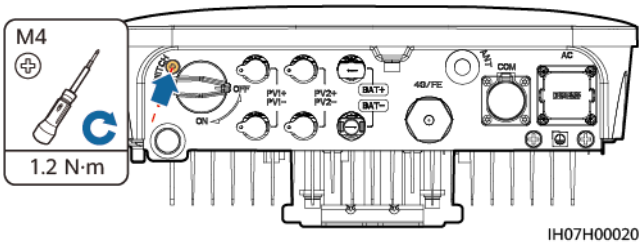

Step 5 Install the inverter on the mounting bracket.

Step 6 Tighten the bolt assemblies.

Figure 4-17 Tightening bolt assemblies

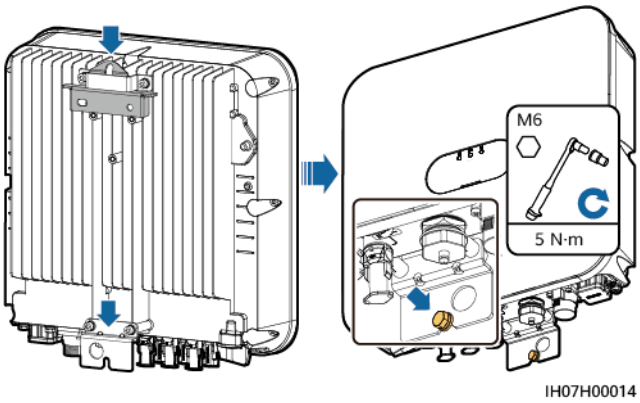

Copyright © Huawei Technologies Co., Ltd.

Step 7 (Optional) Install an anti-theft lock.

NOTICE

- Prepare an anti-theft lock suitable for the lock hole diameter (Φ10 mm).
- An outdoor waterproof lock is recommended.
- Keep the key to the anti-theft lock.

Figure 4-18 Installing an anti-theft lock

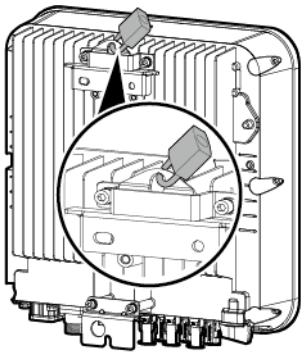

----End

5 Electrical Connection

5.1 Precautions

DANGER

When exposed to sunlight, the PV arrays supply DC voltage to the inverter. Before connecting cables, ensure that all **DC SWITCH** on the inverter are OFF. Otherwise, the high voltage of the inverter may result in electric shocks.

DANGER

- The site must be equipped with qualified fire fighting facilities, such as fire sand and carbon dioxide fire extinguishers.
- Wear personal protective equipment and use dedicated insulated tools to avoid electric shocks or short circuits.

WARNING

- The equipment damage caused by incorrect cable connections is beyond the warranty scope.
- Only certified electrician can perform electrical terminations.
- Operation personnel must wear PPE when connecting cables.
- Before connecting cables to ports, leave enough slack to reduce the tension on the cables and prevent poor cable connections.

 Copyright © Huawei Technologies Co., Ltd.

CAUTION

- Stay away from the equipment when preparing cables to prevent cable scraps from entering the equipment. Cable scraps may cause sparks and result in personal injury and equipment damage.

NOTE

The cable colors shown in the electrical connection diagrams provided in this section are for reference only. Select cables in accordance with local cable specifications (green-and-yellow cables are only used for protective earthing).

5.2 Preparing Cables

Figure 5-1 SUN2000 cable connections (the components in dashed boxes are optional)

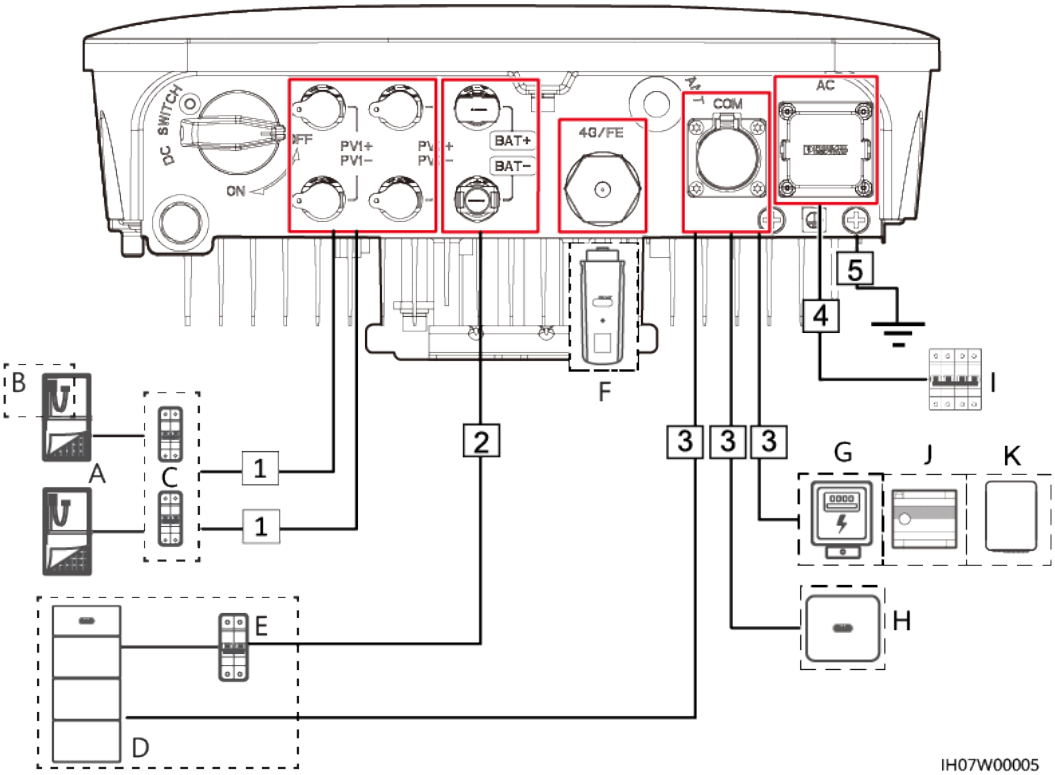

Table 5-1 Component description

No.	Component	Description	Source
A	PV string	• A PV string is composed of the PV modules connected in series and works with an optimizer. • The inverter supports the input from two PV strings.	Prepared by the customer

 Copyright © Huawei Technologies Co., Ltd.

No.	Component	Description	Source
B	Smart PV optimizer	The supported Smart PV optimizer models are SUN2000-(450W-P, 600W-P, 450W-P2) and SUN2000-600W-PA0[d].	Purchased from Huawei
C	DC switch	Recommended: a DC circuit breaker with a rated voltage greater than or equal to 600 V DC and a rated current of 20 A	Prepared by the customer
D	Battery	The inverter can connect to the LUNA2000.	Purchased from Huawei
		The inverter can connect to LG-RESU batteries (LG RESU7H and RESU10H).	Prepared by the customer
E	Battery switch	Recommended: a DC circuit breaker with a rated voltage greater than or equal to 600 V DC and a rated current of 20 A	Prepared by the customer
F	Smart Dongle	Supported models: ● WLAN-FE Smart Dongle: SDongleA-05 ● 4G Smart Dongle: SDongleA-03, SDongleB-06	Purchased from Huawei
G	Power meter[a]	The inverter can connect to the YDS70-C16[b], DDSU666-H, DTSU666-H, DDSU71, DDSU1079-CT, DTSU71, and DHSU1079-CT[c] power meters.	Purchased from Huawei
H	SUN2000	Select a proper model as required.	Purchased from Huawei
I	AC switch	To ensure that the inverter can be safely disconnected from the power grid when an exception occurs, connect an AC switch to the AC side of the inverter. Select an appropriate AC switch in accordance with local industry standards and regulations. Huawei recommends the following switch specifications: A single-phase AC circuit breaker with a rated voltage greater than or equal to 250 V AC and a rated current of: ● 16 A (SUN2000-2KTL-L1) ● 25 A (SUN2000-3KTL-L1 and SUN2000-3.68KTL-L1) ● 32 A (SUN2000-4KTL-L1, SUN2000-4.6KTL-L1, SUN2000-5KTL-L1, and SUN2000-6KTL-L1)	Prepared by the customer

 Copyright © Huawei Technologies Co., Ltd.

No.	Component	Description	Source
J	Smart Assistant	An energy management device used in a residential PV system.	Purchased from Huawei
K	Smart Guard	The single-phase Smart Guard can be used to switch the inverter between on-grid and off-grid states. The models are SmartGuard-63A-S0 and SmartGuard-63A-AUS0.	Purchased from Huawei

- Note a: The Spanish version can use only the DDSU666-H power meter provided by Huawei. For details about how to operate a power meter, see **YDS70-C16 Smart Power Sensor Quick Guide**, **DDSU666-H Smart Power Sensor Quick Guide**, **DTSU666-H and DTSU666-H 250 A (50 mA) Smart Power Sensor Quick Guide**, **DDSU71 Smart Power Sensor Quick Guide**, **DDSU1079-CT Smart Power Sensor Quick Guide**, **DTSU71 Smart Power Sensor Quick Guide**, and **DHSU1079-CT Smart Power Sensor Quick Guide**.
- Note b: SUN2000L V200R001C00SPC127 and later versions can connect to the YDS70-C16 power meter.
- Note c: SUN2000L V200R001C00SPC137 and later versions can connect to the DDSU71, DDSU1079-CT, DTSU71, and DHSU1079-CT power meters.
- Note d:
  - The SUN2000-(450W-P, 600W-P, 450W-P2) and SUN2000-600W-PA0 cannot be used together for the same inverter.
  - The SUN2000-600W-PA0 optimizers apply only to the scenarios where optimizers are configured for all PV modules connected to an inverter or MPPT.

Table 5-2 Cable description

No.	Cable	Type	Recommended Specifications	Source
1	DC input power cable	Common outdoor PV cable in the industry	• Conductor cross-sectional area: 4–6 mm^2 • Cable outer diameter: 5.5–9 mm	Prepared by the customer
2	(Optional) Battery cable	Common outdoor PV cable in the industry	• Conductor cross-sectional area: 4–6 mm^2 • Cable outer diameter: 5.5–9 mm	Prepared by the customer

 Copyright © Huawei Technologies Co., Ltd.

No.	Cable	Type	Recommended Specifications	Source
3	(Optional) Signal cable	Outdoor shielded twisted pair cable	● Conductor cross-sectional area: – Combined crimping of cables on the port: 0.2–0.35 mm^2 – Crimping the cables on the port without combining them: 0.2–1 mm^2 ● Cable outer diameter: – 4-hole rubber plug: 4–8 mm – 2-hole rubber plug: 8–11 mm	Prepared by the customer
4	AC output power cable[a]	● Not using the PE equipotential point at the AC output port: two-core (L and N) outdoor copper cable ● Using the PE equipotential point at the AC output port: three-core (L, N, and PE) outdoor copper cable	● Conductor cross-sectional area: 4–6 mm^2 ● Cable outer diameter: 10–21 mm	Prepared by the customer
5	PE cable	Single-core outdoor copper cable and M6 OT terminal	4–10 mm^2	Prepared by the customer
Note a: The minimum cross-sectional area of the cable should be selected based on the rated value of the AC fuse.				

NOTE

- The minimum cable diameter must comply with local cable standards. Aluminum cables are prohibited.
- The factors that affect cable selection include the rated current, cable type, routing mode, ambient temperature, and maximum expected line loss.

 Copyright © Huawei Technologies Co., Ltd.

5.3 Connecting PE Cables

Precautions

DANGER

- Ensure that the PE cable is securely connected. Otherwise, electric shocks may occur.
- Do not connect the neutral wire to the enclosure as a PE cable. Otherwise, electric shocks may occur.

NOTE

- The PE point at the AC output port is used only as a PE equipotential point, and cannot substitute for the PE point on the enclosure.
- It is recommended that silicone grease or paint be applied around the ground terminal after the PE cable is connected.

Additional Information

The inverter provides the grounding detection function. This function is used to check whether the inverter is properly grounded before the inverter starts, or check whether the ground cable is disconnected when the inverter is running. This function is only available under limited conditions. To ensure the safe operation of the inverter, properly ground the inverter according to the connection requirements of the ground cable. For some power grid types, if the output side of the inverter is connected to an isolation transformer, ensure that the inverter is properly grounded and set **Grounding Exception Detection** to **c** to enable the inverter to run properly. If you are not sure whether the inverter is connected to such a type of power grid, contact your dealer or Huawei technical support for confirmation.

- According to IEC 62109, to ensure the safe operation of the inverter in the case of ground cable damage or disconnection, properly connect the ground cable of the inverter and ensure that it meets at least one of the following requirements before the grounding detection function becomes invalid:
  - If the PE terminal is not connected to the AC connector, use a single-core outdoor copper cable with a conductor cross-sectional area of at least 10 mm^2 as the PE cable on the chassis.
  - Use cables with the same diameter as the AC output power cable and ground the PE terminal on the AC connector and the ground screws on the chassis.
- In some countries and regions, the inverter must have additional ground cables. Use cables with the same diameter as the AC output power cable and ground the PE terminal on the AC connector and the ground screws on the chassis.

Copyright © Huawei Technologies Co., Ltd.

Procedure

Step 1 Crimp an OT terminal.

NOTICE

- Avoid scratching the core wire when stripping a cable.
- The cavity formed after the conductor crimp strip of the OT terminal is crimped must wrap the core wires completely. The core wires must contact the OT terminal closely.
- Wrap the wire crimping area with heat shrink tubing or insulation tape. The heat shrink tubing is used as an example.
- When using a heat gun, protect the equipment from being scorched.

Figure 5-2 Crimping an OT terminal

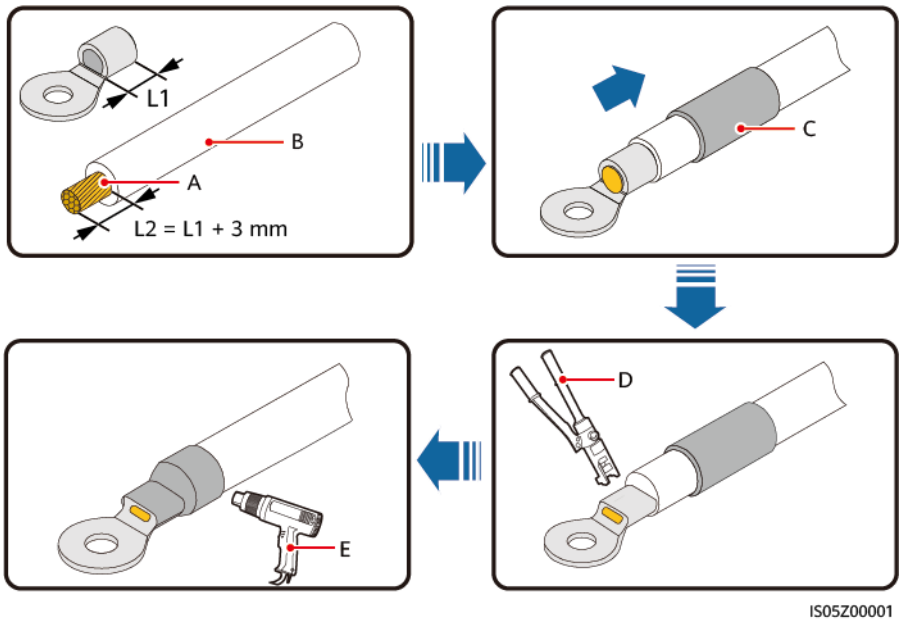

(A) Core wire (B) Insulation layer (C) Heat shrink tubing

(D) Hydraulic pliers (E) Heat gun

Step 2 Connect the PE cable.

NOTICE

- Ensure that the PE cable is connected securely.
- You are advised to use the right ground point and reserve the other ground point for future use.

 Copyright © Huawei Technologies Co., Ltd.

Figure 5-3 Connecting a PE cable

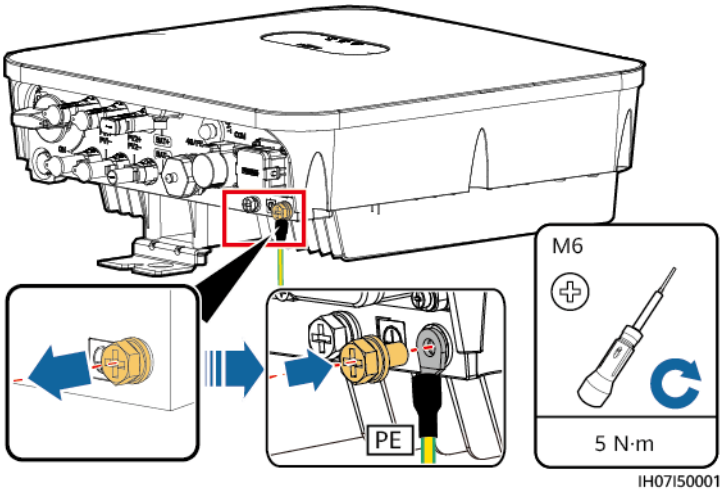

----End

5.4 (Optional) Installing a Smart Dongle

Procedure

NOTE

- You are advised to install the Smart Dongle before installing the WLAN antenna.
- If you prepared a Smart Dongle without a SIM card, you need to prepare a standard SIM card (size: 25 mm x 15 mm) with the capacity greater than or equal to 64 KB.
- When installing the SIM card, determine its installation direction based on the silk screen and arrow on the card slot.
- Press the SIM card in place to lock it, indicating that the SIM card is correctly installed.
- When removing the SIM card, push it inwards to eject it.
- When reinstalling the cover of the Smart Dongle, ensure that the buckles spring back in place with a click sound.

- 4G Smart Dongle (4G Communication)

Figure 5-4 Installing the 4G Smart Dongle (SDongleB-06)

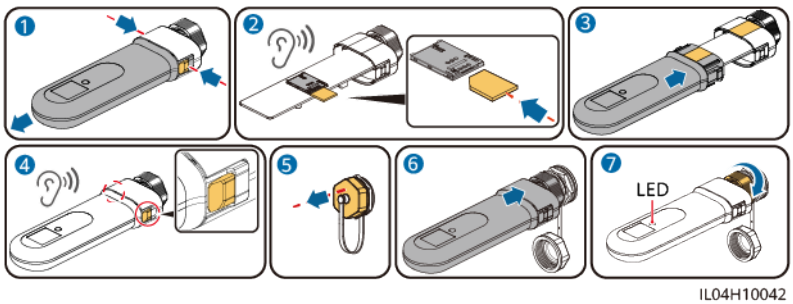

- WLAN-FE Smart Dongle (FE Communication)

  You are advised to use a CAT 5E outdoor shielded network cable (outer diameter < 9 mm; internal resistance ≤ 1.5 ohms/10 m) and shielded RJ45 connectors.

Figure 5-5 Installing the WLAN-FE Smart Dongle (FE communication)

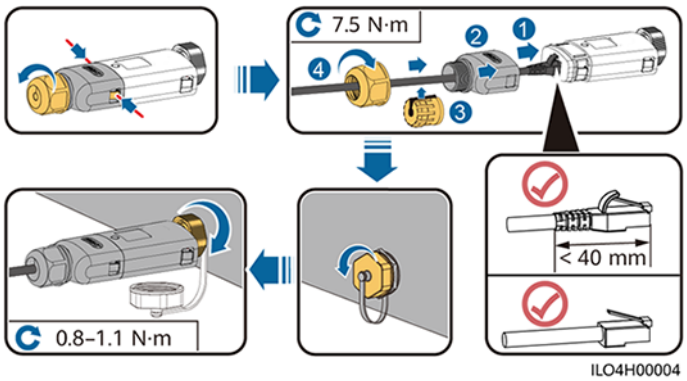

NOTE

There are two types of Smart Dongle:

- For details about how to use the WLAN-FE Smart Dongle SDongleA-05, see the ***SDongleA-05 Quick Guide (WLAN-FE)***. You can also scan the QR code to obtain the document.
- For details about how to use the 4G Smart Dongle SDongleB-06, see the ***SDongleB-06 Smart Dongle Quick Guide (4G)***. You can also scan the QR code to obtain the document.

The quick guide is delivered with the Smart Dongle.

5.5 Installing a WLAN Antenna

Procedure

Step 1 Remove the watertight cap from the ANT port.

Step 2 Install the washer to the ANT port on the chassis.

Step 3 Install the WLAN antenna.

NOTICE

Ensure that the WLAN antenna is installed securely.

 Copyright © Huawei Technologies Co., Ltd.

Figure 5-6 Installing a WLAN antenna

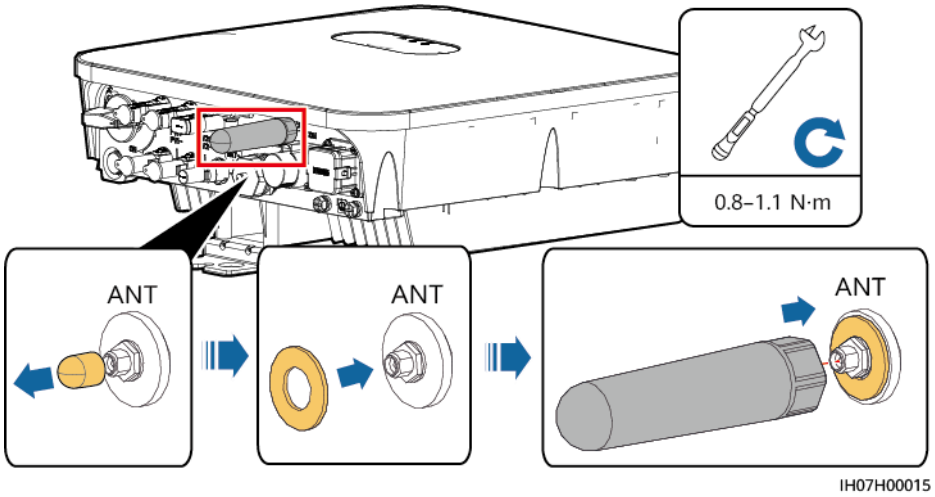

----End

5.6 Connecting an AC Output Power Cable

Precautions

An AC switch must be installed on the AC side of the inverter to ensure that the inverter can be safely disconnected from the power grid.

WARNING

- Do not connect loads between an inverter and an AC switch that directly connects to the inverter. Otherwise, the switch may trip by mistake.
- If an AC switch is used with specifications beyond local standards, regulations, or the Company's recommendations, the switch may fail to turn off in a timely manner in case of exceptions, causing serious faults.

CAUTION

Each inverter shall be equipped with an AC output switch. Multiple inverters shall not connect to the same AC switch.

The inverter is integrated with a comprehensive residual current monitoring unit. Once detecting that the residual current exceeds the threshold, the inverter immediately disconnects itself from the power grid.

Copyright © Huawei Technologies Co., Ltd.

NOTICE

- If the external AC switch provides the leakage protection function, the rated leakage action current should be greater than or equal to 100 mA.
- If multiple inverters connect to the general residual current device (RCD) through their respective external AC switches, the rated leakage action current of the general RCD should be greater than or equal to the number of inverters multiplied by 100 mA.
- A knife switch cannot be used as an AC switch.

Procedure

Step 1 Connect the AC output power cable to the AC connector.

NOTICE

- The PE point at the AC output port is used only as a PE equipotential point, and cannot substitute for the PE point on the enclosure.
- Keep the AC output power cable and the PE cable close to each other.
- Keep the AC output power cable and the DC input power cable close to each other.
- Ensure that the cable jacket is inside the connector.
- Ensure that the exposed core is totally inserted into the cable hole.
- Ensure that AC output cable is secured. Failing to do so may cause device malfunction or damage to its AC connector.
- Ensure that the cable is not twisted.

NOTICE

Strip the insulation layers of the AC output power cable by the recommended length (12–16 mm) to ensure that the cable conductors are completely inside the conductor insertion points and no insulation layer is pressed into the conductor insertion points. Otherwise, the device may fail to run properly or be damaged during operation.

 Copyright © Huawei Technologies Co., Ltd.

Figure 5-7 Assembling an AC connector (three-core wire)

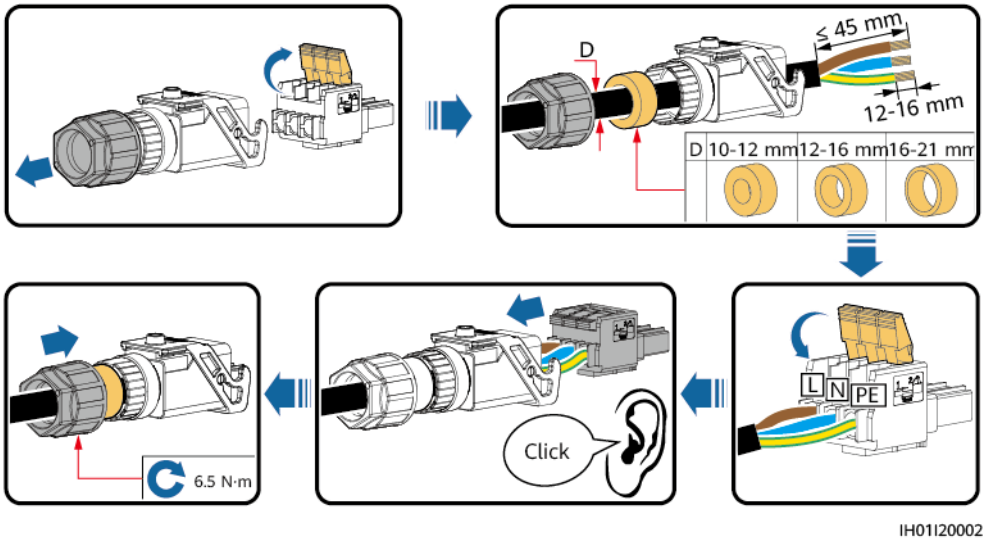

Figure 5-8 Assembling an AC connector (two-core wire)

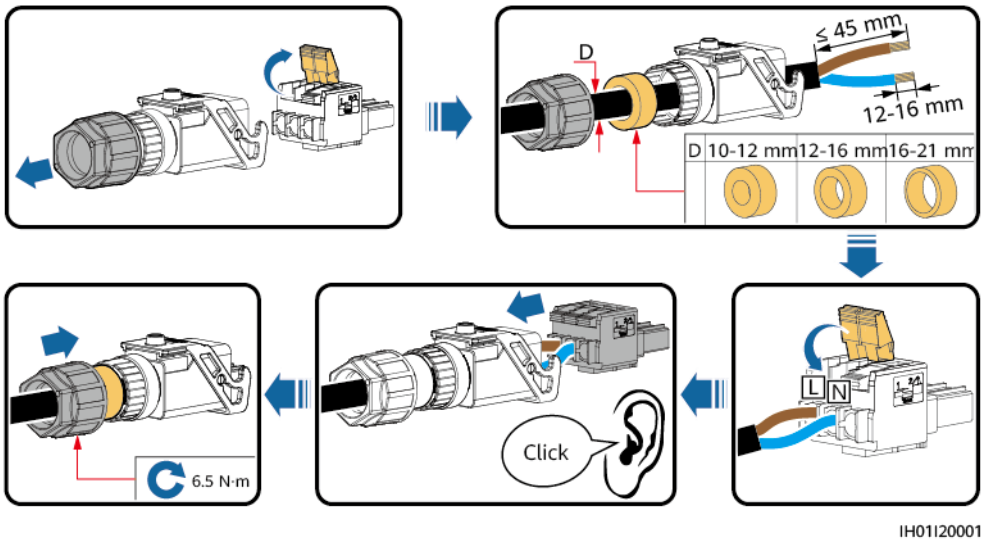

NOTE

- The cable colors shown in the figures are for reference only. Select an appropriate cable according to the local standards.
- For the core installation method and the length for cable stripping, see the instructions on the side of the plug insert.

 Copyright © Huawei Technologies Co., Ltd.

Figure 5-9 Length for cable stripping

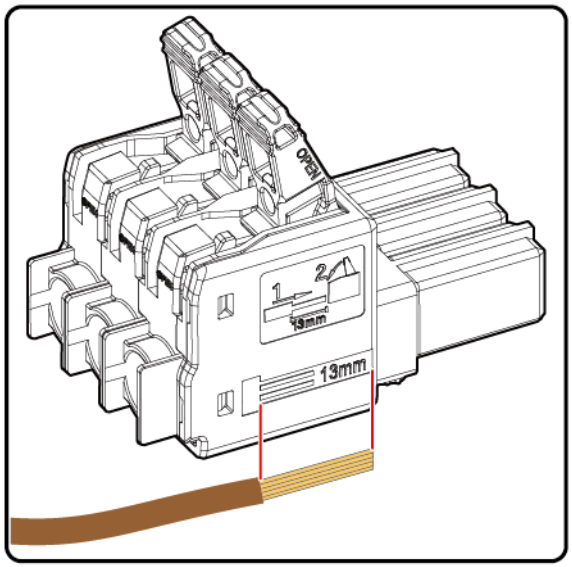

Step 2 Connect the AC connector to the AC output port.

NOTICE

Ensure that the AC connector is connected securely.

Figure 5-10 Securing an AC connector

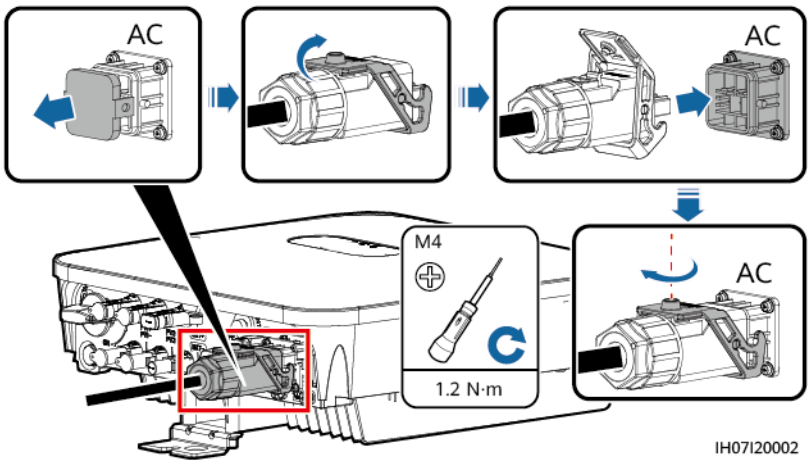

Step 3 Check the route of the AC output power cable.

Copyright © Huawei Technologies Co., Ltd.

Figure 5-11 Cabling requirements

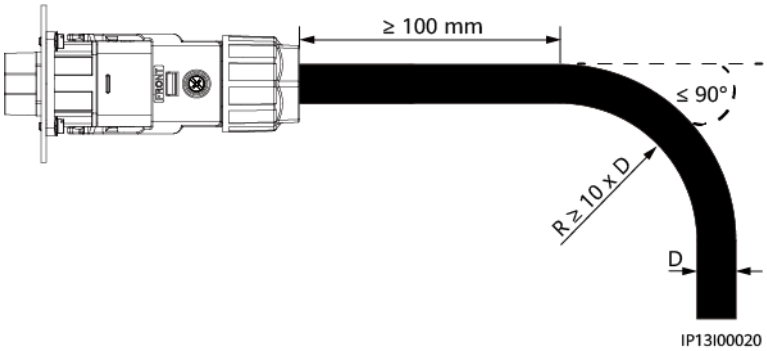

----End

Follow-up Procedure

WARNING

Before removing the AC connector, ensure that the DC switch at the bottom of the inverter and all the switches connected to the inverter are OFF.

To remove the AC connector from the inverter, perform the operations in reverse order.

Figure 5-12 Removing a plug insert

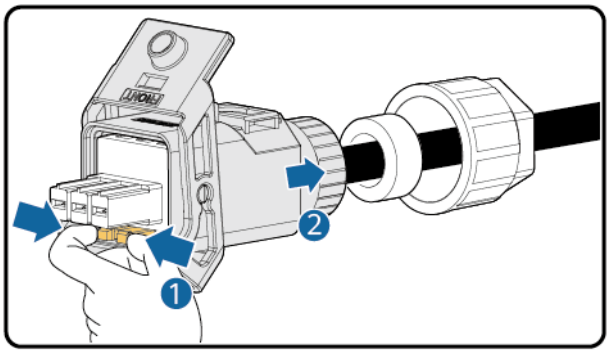

Copyright © Huawei Technologies Co., Ltd.

5.7 Connecting DC Input Power Cables

Precautions

DANGER

- Before connecting the DC input power cables, ensure that the DC voltage is within the safe range (lower than 60 V DC) and that the DC switch on the inverter is OFF. Failing to do so may result in electric shocks.
- When the inverter is running, it is not allowed to work on the DC input power cables, such as connecting or disconnecting a PV string or a PV module in a PV string. Failing to do so may cause electric shocks.
- If no PV string connects to a DC input terminal of the inverter, do not remove the watertight cap from the DC input terminals. Otherwise, the IP rating of the inverter will be affected.

WARNING

Ensure that the following conditions are met. Otherwise, the inverter may be damaged, or even a fire could happen.

- The DC input voltage of the inverter shall not exceed maximum input voltage under any circumstance.
- The polarities of electric connections are correct on the DC input side. The positive and negative terminals of a PV string connect to corresponding positive and negative DC input terminals of the inverter.
- If the DC input power cables are reversely connected, do not operate the DC switch as well as positive and negative connectors immediately. Wait until the night when solar irradiance declines and the PV string current drops to below 0.5 A. Then set the DC switch to the OFF position, remove the positive and negative connectors, and correct the polarities of the DC input power cables.

WARNING

During the installation of PV strings and the inverter, the positive or negative terminals of PV strings may be short-circuited to ground if the power cables are not properly installed or routed. In this case, an AC or DC short circuit may occur and damage the inverter. The resulting device damage is not covered under any warranty.

Copyright © Huawei Technologies Co., Ltd.

NOTICE

Since the output of the PV string connected to the inverter cannot be grounded, ensure that the PV module output is well insulated to ground.

Terminal Description

Figure 5-13 DC input terminals

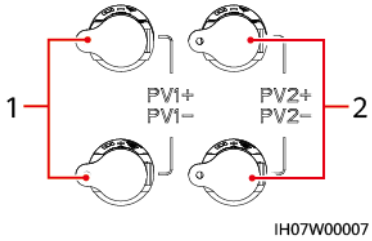

(1) Terminals of DC input 1

(2) Terminals of DC input 2

Procedure

Step 1 Assemble a DC connector.

CAUTION

Use the Staubli MC4 positive and negative metal terminals and DC connectors delivered with the inverter. Using incompatible positive and negative metal terminals and DC connectors may result in serious consequences. The caused device damage is not covered under any warranty or service agreement.

Copyright © Huawei Technologies Co., Ltd.

NOTICE

- Keep the DC input PV+ cable and PV– cable close to each other.
- Cables with high rigidity, such as armored cables, are not recommended as DC input power cables, because poor contact may be caused by the bending of the cables.
- Before assembling DC connectors, label the cable polarities correctly to ensure correct cable connections.
- After crimping the positive and negative metal terminals, pull the DC input power cables back to ensure that they are connected securely.
- Insert the crimped metal terminals of the positive and negative power cables into the appropriate positive and negative connectors. Then pull back the DC input power cables to ensure that they are connected securely.
- During DC input power cabling, leave at least 50 mm of slack. The axial tension on PV connectors must not exceed 80 N. Radial stress or torque must not be generated on PV connectors.

Figure 5-14 Assembling a DC connector

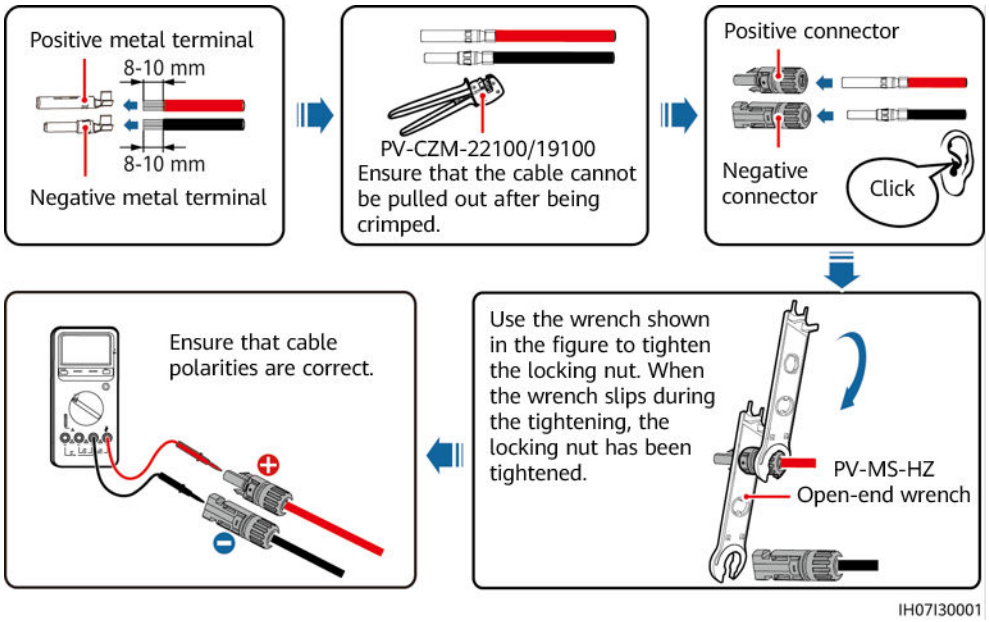

NOTE

- If the PV string is not configured with an optimizer, use a multimeter to measure the voltage at the DC position. The multimeter must have a DC voltage range of at least 600 V. If the voltage is a negative value, the DC input polarity is incorrect and needs correction. If the voltage is greater than 600 V, too many PV modules are configured to the same string. Remove some PV modules.
- If the PV string is configured with an optimizer, check the cable polarity by referring to the Smart PV optimizer quick guide.

 Copyright © Huawei Technologies Co., Ltd.

WARNING

Before performing **Step 2**, ensure that the DC switch is set to OFF.

Step 2 Insert the positive and negative connectors into corresponding DC input terminals on the inverter.

NOTICE

After the positive and negative connectors snap into place, pull the DC input power cables back to ensure that they are connected securely.

Figure 5-15 Connecting DC input power cables

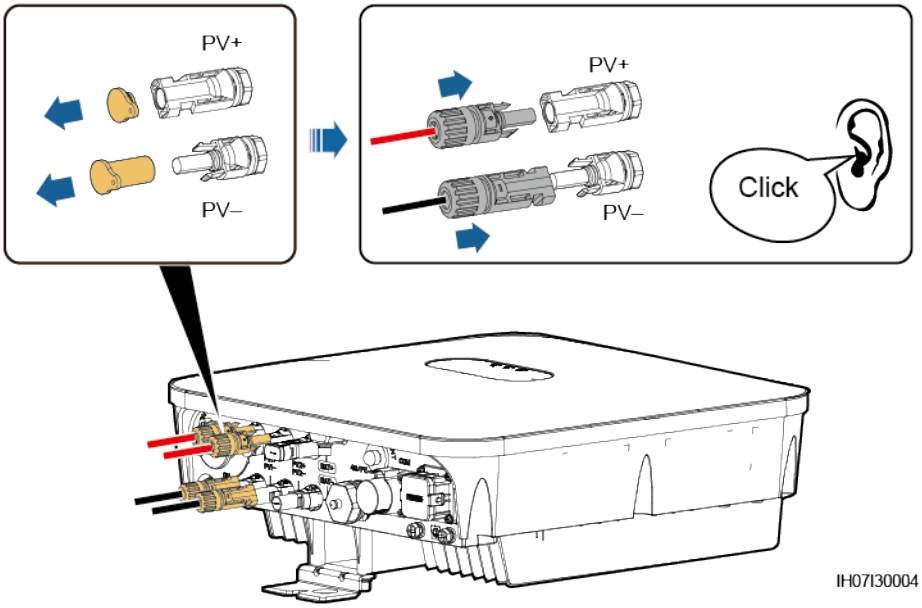

NOTICE

If the DC input power cable is reversely connected and the DC switch is set to ON, do not immediately turn off the DC switch or reconnect the positive and negative connectors. Otherwise, the device may be damaged. The caused device damage is not covered under any warranty or service agreement. Wait until the night when solar irradiance declines and the PV string current drops to below 0.5 A. Then set the DC switch to the OFF position, remove the positive and negative connectors, and correct the polarities of the DC input power cables.

----End

Follow-up Procedure

Copyright © Huawei Technologies Co., Ltd.

WARNING

Before removing the positive and negative connectors, ensure that the DC switch is OFF.

To remove the positive and negative connectors from the inverter, insert a disassembly tool into the notch and press the tool with an appropriate force.

Figure 5-16 Removing a DC connector

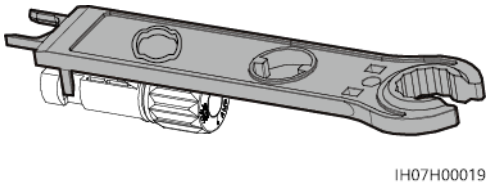

5.8 (Optional) Connecting Battery Cables

Prerequisites

DANGER

- Battery short circuits may cause personal injury. The high transient current generated by a short circuit may release a surge of power and cause fire.
- Do not connect or disconnect the battery cable when the inverter is running. Failing to do so may cause electric shocks.
- Before connecting the battery cables, ensure that the DC switch on the inverter and all the switches connecting to the inverter are OFF, and the inverter has no residual electricity. Otherwise, the high voltage of the inverter and battery may result in electric shocks.
- If no battery connects to the inverter, do not remove the watertight cap from the battery terminal. Otherwise, the IP rating of the inverter will be affected. If a battery connects to the inverter, set aside the watertight cap. Reinstall the watertight cap immediately after removing the connector. The high voltage of the battery terminal may result in electric shocks.

A battery switch can be configured between the inverter and the battery to ensure that the inverter can be safely disconnected from the battery.

WARNING

- Do not connect loads between the inverter and the battery.
- The battery cables should be connected correctly. That is, the positive and negative terminals of the battery connect to the positive and negative battery terminals on the inverter respectively. Otherwise, the inverter may be damaged, or even a fire could happen.

Copyright © Huawei Technologies Co., Ltd.

WARNING

During the installation of the ESS and the inverter, the positive or negative terminal of the ESS may be short-circuited to ground if the power cables are not properly installed or routed. In this case, an AC or DC short circuit may occur and damage the devices. The resulting device damage is not covered under any warranty.

Procedure

Step 1 Assemble the positive and negative connectors by referring to **5.7 Connecting DC Input Power Cables**.

DANGER

- The battery voltage will result in serious injury. Use dedicated insulation tools to connect cables.
- Ensure that cables are correctly connected between the battery terminal and the battery switch, and between the battery switch and the inverter battery terminal.

NOTICE

Cables with high rigidity, such as armored cables, are not recommended as battery cables, because poor contact may be caused by the bending of the cables.

Step 2 Insert the positive and negative connectors into corresponding battery terminals on the inverter.

NOTICE

After the positive and negative connectors snap into place, pull the battery cables back to ensure that they are connected securely.

 Copyright © Huawei Technologies Co., Ltd.

Figure 5-17 Connecting battery cables

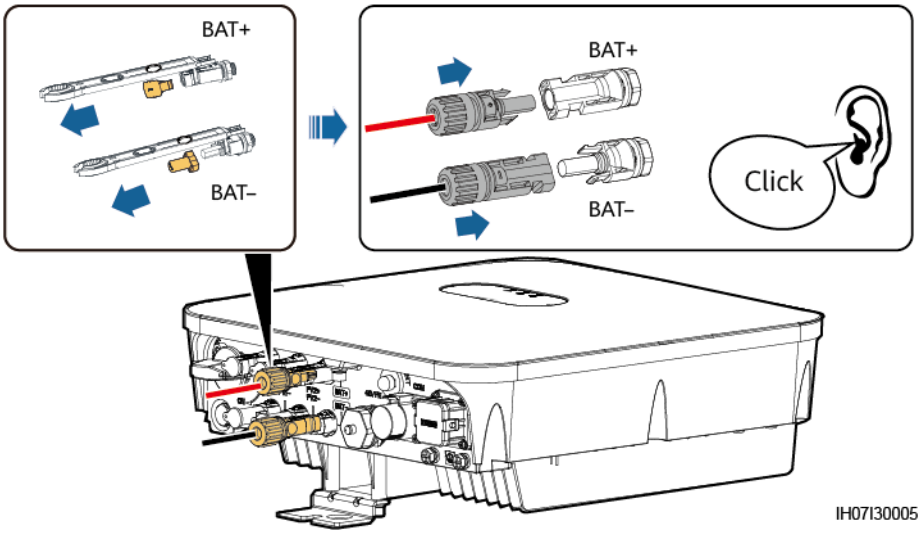

----End

5.9 (Optional) Connecting Signal Cables

Context

NOTICE

When laying out signal cables, separate them from power cables and keep them away from strong interference sources to prevent communication interruption.

Figure 5-18 Signal cable ports

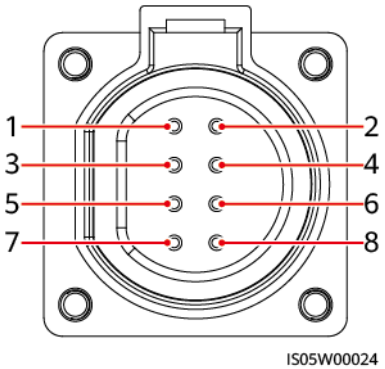

Copyright © Huawei Technologies Co., Ltd.

Table 5-3 COM port definition

No.	Label	Definition	Description
1	485B1	RS485B, RS485 differential signal–	Used for cascading inverters or connecting to the RS485 signal port of the SmartAssistant or Smart Guard. When cascaded inverters and the SmartAssistant coexist, they share the 485B1 and 485A1 ports. **NOTE** Inverters cannot be cascaded in the Smart Guard networking.
2	485A1	RS485A, RS485 differential signal+	
3	485B2	RS485B, RS485 differential signal–	Used to connect to the RS485 signal ports on the batteries or power meters. When batteries and power meters coexist, they share the 485B2 and 485A2 ports.
4	485A2	RS485A, RS485 differential signal+	
5	GND	GND of the enable signal/12V/DI1/DI2	Used to connect to the GND of the enable signal/12V/DI1/DI2 of a battery.
6	EN+	Enable signal+/12V+	Used to connect to the enable signal of a battery and the positive terminal of 12V.
7	DI1	Digital input signal 1+	Used to connect to the DRM0 scheduling signal or serve as the signal port for rapid shutdown or system shutdown via DI.
8	DI2	Digital input signal 2+	It receives feedback signals of the Backup Box or Smart Guard.

NOTE

For details about how to connect signal cables, see **SUN2000L-(2KTL-5KTL) and SUN2000-(2KTL-6KTL)-L1 Battery and Smart Power Sensor Quick Guide**. You can also scan the QR code to obtain the document.

Copyright © Huawei Technologies Co., Ltd.

Communication Networking Mode (Smart Dongle Networking)

NOTE

The power meter and Smart Dongle must be connected to the same inverter.

- Single-inverter scenario

Figure 5-19 Single inverter

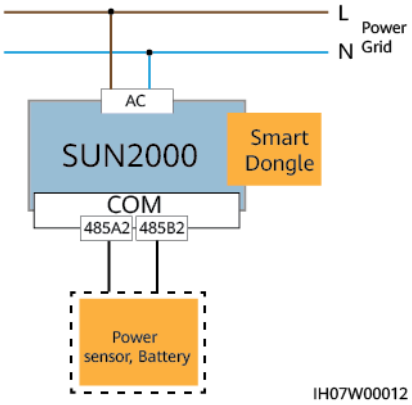

Figure 5-20 Connecting cables to the power meter (single inverter)

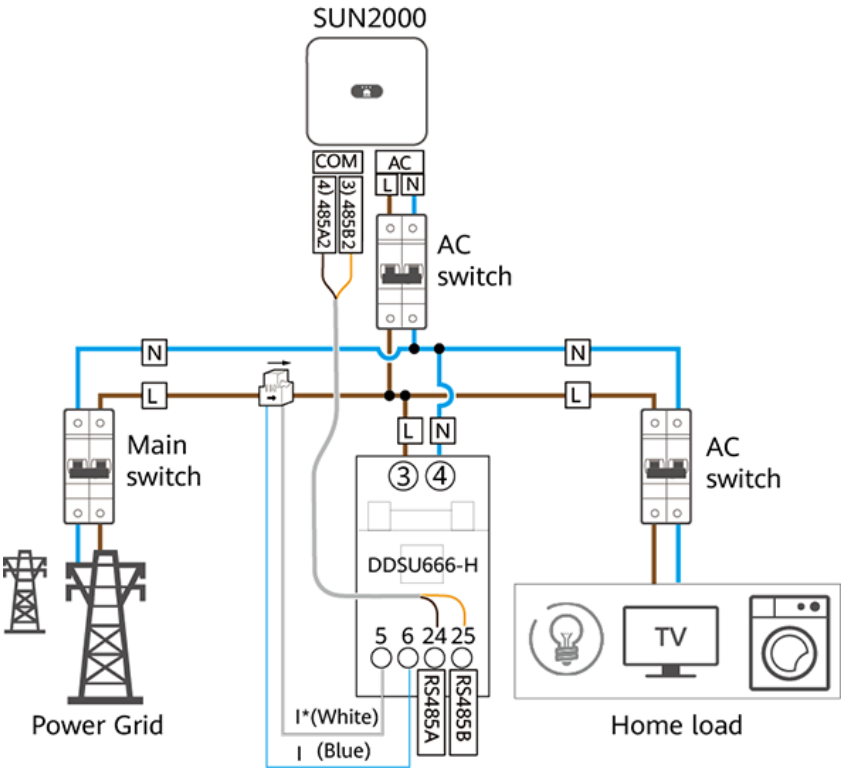

- Inverter cascading scenario
  - In-phase grid connection

Copyright © Huawei Technologies Co., Ltd.

Figure 5-21 In-phase grid connection

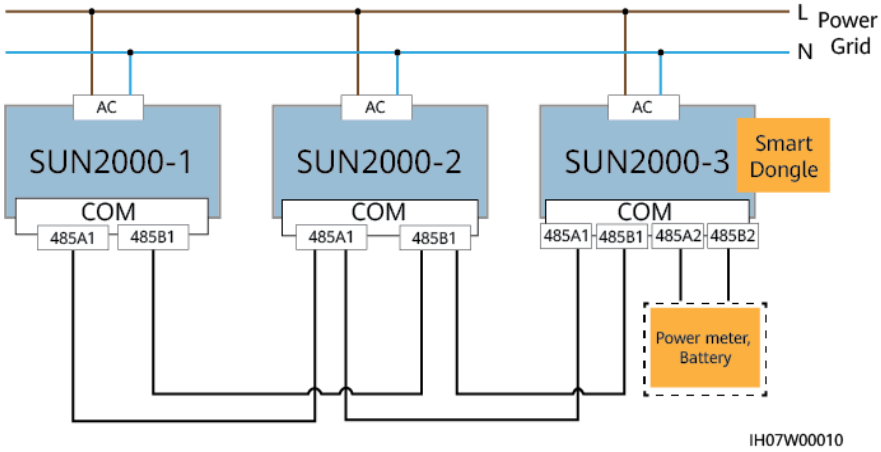

Figure 5-22 Connecting cables to the power meter (in-phase grid connection)

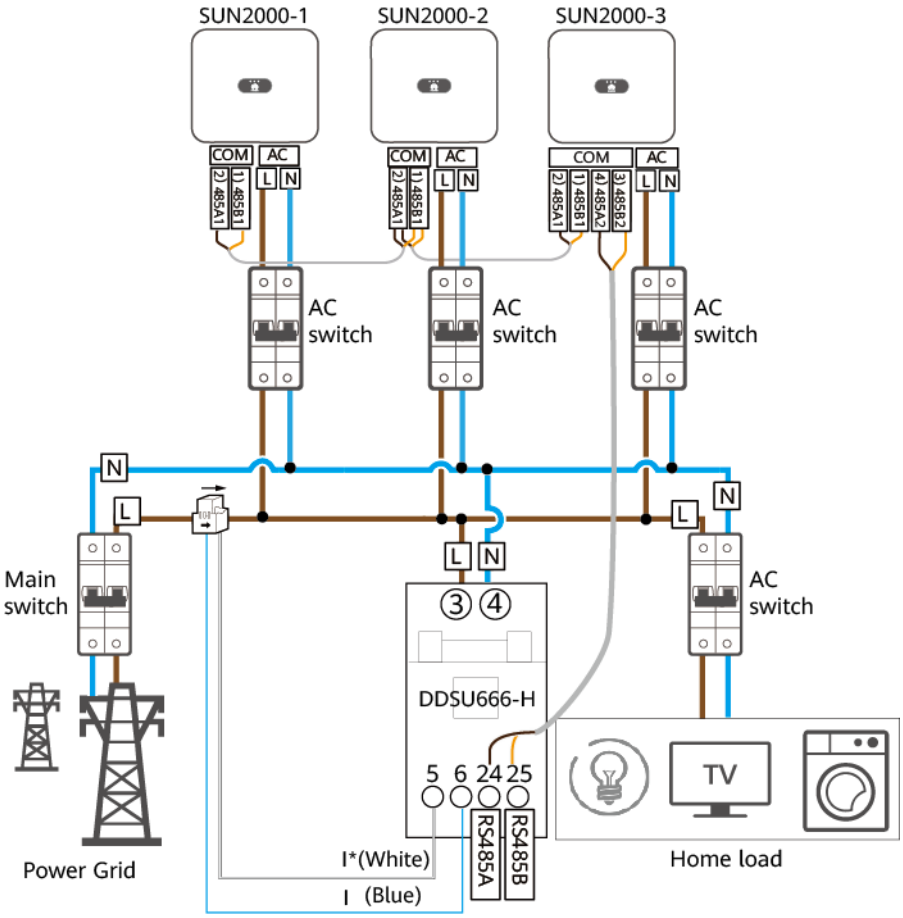

Copyright © Huawei Technologies Co., Ltd.

NOTE

- Retain the default baud rates for the DDSU666-H, YDS70-C16, DDSU71, and DDSU1079-CT power meters. If they are changed, the power meters may go offline, generate alarms, or affect the inverter output power.
- The preceding networking uses DDSU666-H as an example. Cable connections for other meter models may vary.
- In cascading scenarios, the inverters are required to connect to the management system through a Smart Dongle.
- In the preceding networking, the inverters are cascaded and support the grid-tied point control function to achieve zero export.
- If the inverters require the grid-tied point control function, they need to be connected to a power meter.
- A single-phase power meter is recommended for the networking with only single-phase inverters.
- In the PV+ESS scenario, a maximum of three inverters can be cascaded. The inverter connected to the Smart Dongle must be connected to the ESS. Whether other inverters are connected to the ESS is optional.
- If the SUN2000-(2KTL-6KTL)-L1 is cascaded with three-phase inverters, the SUN2000-(2KTL-6KTL)-L1 must be connected to the grid in phase.
- In new deployment and capacity expansion scenarios, it is recommended that multiple single-phase inverters be connected in parallel.
- Only one LG battery is supported, and the LG battery must be connected to the inverter where the Smart Dongle is installed.
- LG batteries cannot be connected in cascading scenarios.

 Copyright © Huawei Technologies Co., Ltd.

Communication Networking Mode (SmartAssistant Networking)

Figure 5-23 Connecting cables to the SmartAssistant

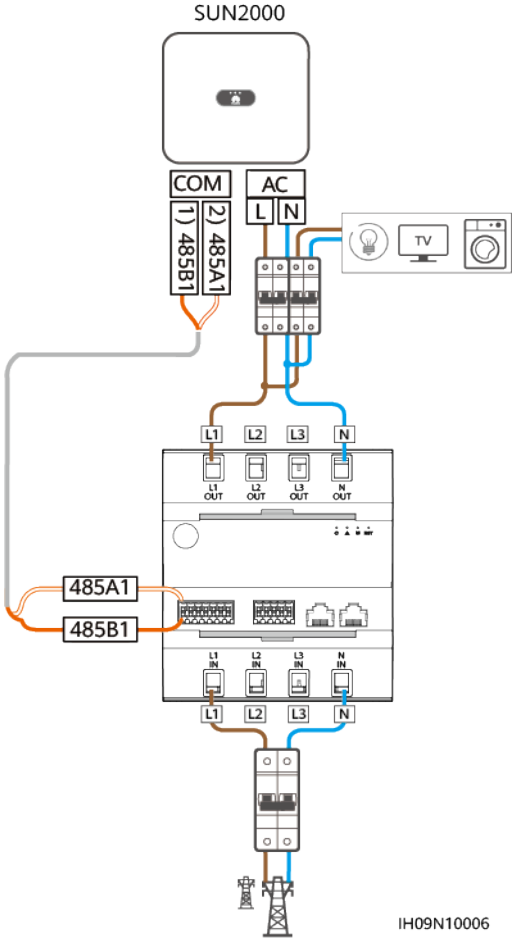

Communication Networking Mode (Smart Guard Networking)

Figure 5-24 Connecting cables to the Smart Guard

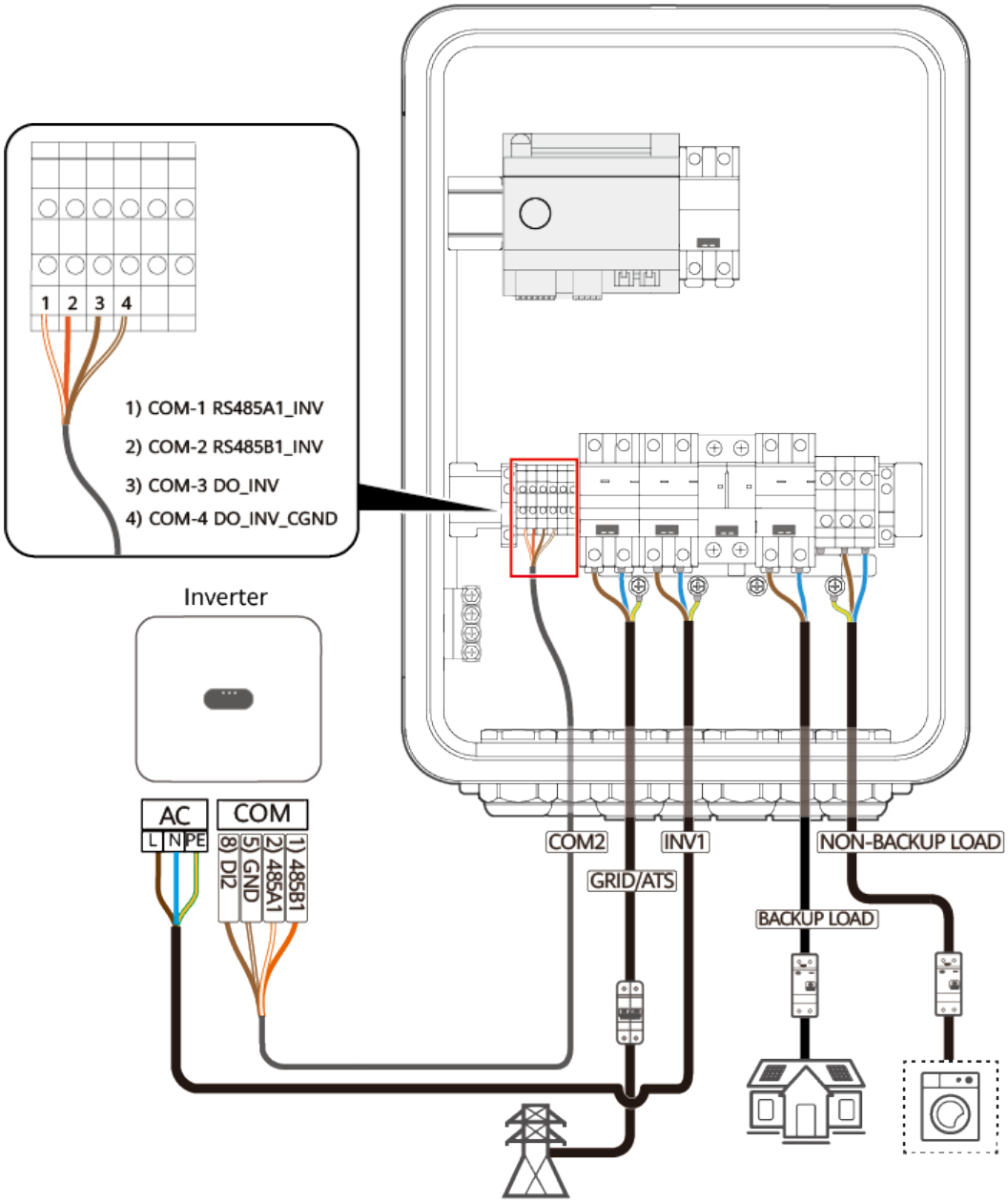

Procedure

Step 1 Connect signal cables to corresponding signal connectors.

Copyright © Huawei Technologies Co., Ltd.

NOTICE

- Ensure that the protection layer of the cable is in the connector. The surplus core should be cut off from the protection layer.
- Ensure that the exposed core is totally inserted into the cable hole.
- Ensure that the signal cables are connected securely.
- Ensure that the cables are not twisted.
- If multiple signal cables need to be connected to a single connector, ensure that the outer diameters of the signal cables are the same.

Figure 5-25 Crimping two signal cables

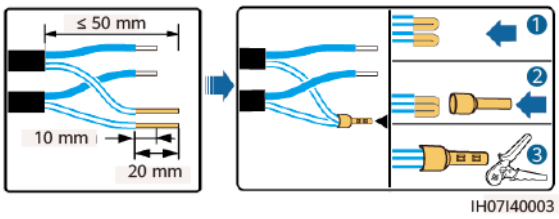

Figure 5-26 Crimping three signal cables

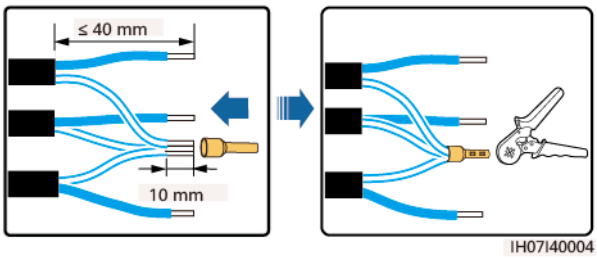

Figure 5-27 Assembling a signal connector (single inverter)

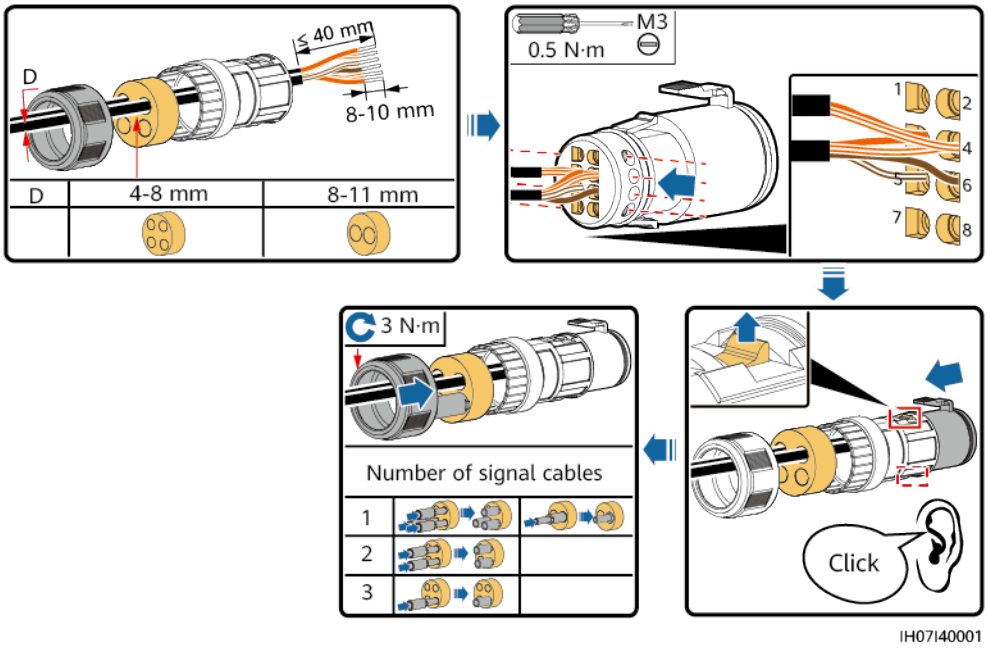

Copyright © Huawei Technologies Co., Ltd.

Figure 5-28 Assembling a signal connector (inverter cascading)

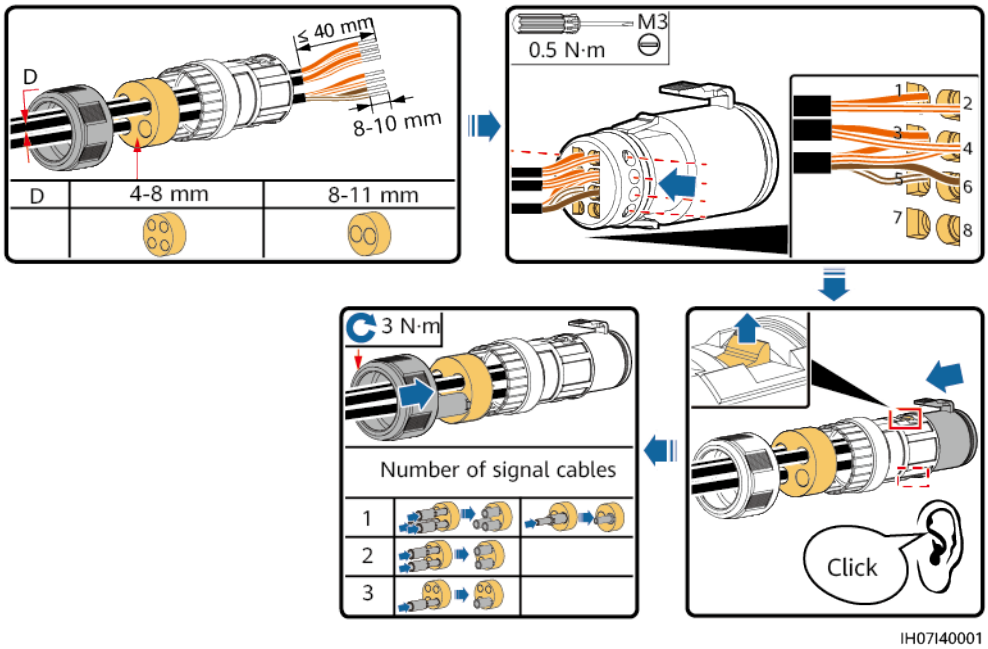

Step 2 Connect the signal connector to the corresponding port.

NOTICE

Ensure that the signal connector is connected securely.

Figure 5-29 Securing a signal connector

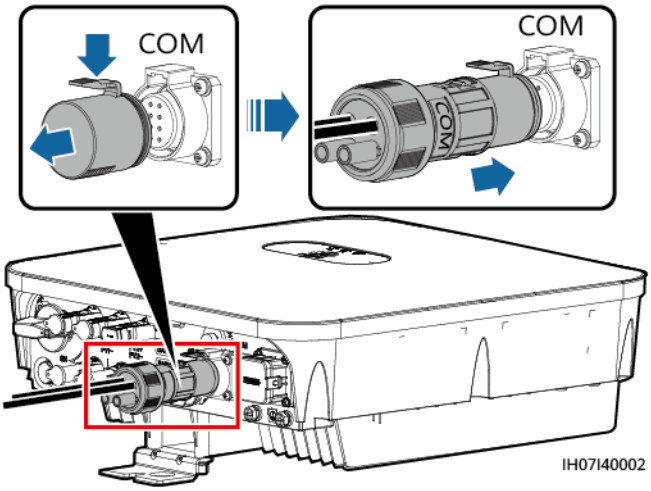

----End

Copyright © Huawei Technologies Co., Ltd.

6 Verification Before Power-On

Table 6-1 Check items and acceptance criteria

No.	Check Item	Acceptance Criteria
1	Inverter	The inverter is installed correctly and securely.
2	WLAN antenna	The WLAN antenna is installed correctly and securely.
3	Cables routing	Cables are routed properly as required by the customer.
4	Cable tie	Cable ties are evenly distributed and no burr exists.
5	Grounding	The PE cable is connected correctly, securely, and reliably.
6	Switch	The DC switch and all the switches connecting to the inverter are OFF.
7	Cable connection	The AC output power cable, DC input power cable, battery cable, and signal cable are connected correctly, securely, and reliably.
8	Unused terminal and port	Unused terminals and ports are locked by watertight caps.
9	Installation environment	The installation space is proper, and the installation environment is clean and tidy.

 Copyright © Huawei Technologies Co., Ltd.

7 Power-On and Commissioning

DANGER

- Wear personal protective equipment and use dedicated insulated tools to avoid electric shocks or short circuits.

7.1 System Power-On

Prerequisites

Before turning on the AC switch between the inverter and the power grid, use a multimeter to check that the AC voltage is within the allowed range.

NOTICE

Before the equipment is put into operation for the first time, ensure that the parameters are set correctly by professional personnel. Incorrect parameter settings may result in noncompliance with local grid connection requirements and affect the normal operations of the equipment.

NOTICE

- If the DC power supply is connected but the AC power supply is disconnected, the inverter will report a **Grid Loss** alarm. The inverter can start properly only after the power grid recovers.
- If the AC power supply is connected but the battery is not connected, the inverter reports a **Battery Abnormal** alarm.
- If the inverter is connected to LG batteries, turn on the DC switch within 1 minute after the AC switch is turned on. Otherwise, the inverter, connected to the power grid, will shut down and start again.

 Copyright © Huawei Technologies Co., Ltd.

Procedure

Step 1 If the battery port of the inverter is connected to a battery, turn on the auxiliary power switch of the battery and then the battery switch.

Step 2 Turn on the AC switch between the inverter and the power grid.

Step 3 (Optional) Remove the locking screw from the DC switch.

Figure 7-1 Removing the locking screw from a DC switch

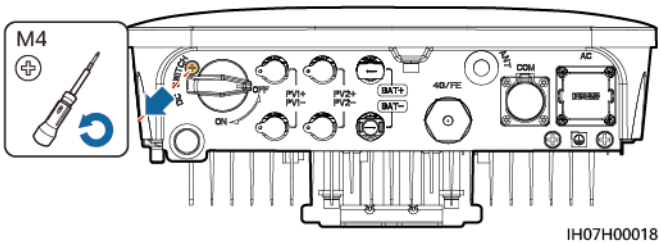

Step 4 Turn on the DC switch between the PV string and the inverter if there is any.

Step 5 Turn on the DC switch at the bottom of the inverter.

Step 6 Observe the LEDs to check the inverter operating status.

Table 7-1 LED indicators 1

Category	Status		Description
Running indicator 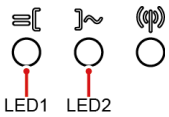	**LED1**	**LED2**	–
	Steady green	Steady green	The inverter is operating in grid-tied mode.
	Blinking green at long intervals (on for 1s and then off for 1s)	Off	The DC is on and the AC is off.
	Blinking green at long intervals (on for 1s and then off for 1s)	Blinking green at long intervals (on for 1s and then off for 1s)	Both the DC and AC are on, and the inverter is not exporting power to the power grid.
	Off	Blinking green at long intervals (on for 1s and then off for 1s)	The DC is off and the AC is on.
	Steady orange	Steady orange	The inverter is operating in the off-grid mode.
	Blinking orange slowly	Off	The DC is on, and the inverter has no output in the off-grid mode.

 Copyright © Huawei Technologies Co., Ltd.

Category	Status		Description
	Blinking orange slowly	Blinking orange slowly	The inverter is operating in the overload in backup mode.
	Off	Off	Both the DC and AC are off.
	Blinking red at short intervals (on for 0.2s and then off for 0.2s)	–	There is a DC environmental alarm, such as an alarm indicating that High String Input Voltage, String Reverse Connection, or Low Insulation Resistance.
	–	Blinking red at short intervals (on for 0.2s and then off for 0.2s)	There is an AC environmental alarm, such as an alarm indicating Grid Undervoltage, Grid Overvoltage, Grid Overfrequency, or Grid Underfrequency.
	Steady red	Steady red	Fault.
Communication indicator 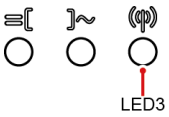	**LED3**		–
	Blinking green at short intervals (on for 0.2s and then off for 0.2s)		Communication is in progress.
	Blinking green at long intervals (on for 1s and then off for 1s)		The mobile phone is connected to the inverter.
	Off		There is no communication.

NOTE

If the off-grid load is overloaded, indicators LED1 and LED2 on the inverter blink orange slowly. Reduce the off-grid load power and manually clear the alarm or until the inverter is recovered. The inverter attempts to restart at an interval of 5 minutes. If the inverter fails to restart for three times, the interval changes to 2 hours. If the inverter is standby in off-grid mode, check the inverter alarms and rectify the fault.

 Copyright © Huawei Technologies Co., Ltd.

Table 7-2 LED indicators 2

Category	Status			Description
Device replacement indication	**LED1**	**LED2**	**LED3**	–
	Steady red	Steady red	Steady red	The inverter hardware is faulty. The inverter needs to be replaced.

----End

7.2 Device Commissioning

Smart Guard Networking

No.	Contents
1	Downloading the App and Registering an Installer Account
2	Quick Settings, Running Information Viewing, and Alarm Management
3	Setting Parameters: Backup Power Parameter Settings, Power Control, and Battery Parameter Settings
4	Connecting to a Plant
5	Registering an Owner Account or Another Installer Account
6	Energy Management: Negative Rate Optimization, Energy Management Assistant, and Intelligent Power Backup

For details about the device commissioning procedure, see the *Smart Guard Networking Commissioning Manual*. The commissioning manual varies depending on the app. Refer to the manual corresponding to the app in use.

SmartAssistant Networking

No.	Contents
1	Downloading the App and Registering an Installer Account
2	Quick Settings
3	Connecting to a Plant, Setting Electricity Prices, and Registering an Account
4	Setting Parameters: Power Control, Battery Parameter Settings, Communication Parameter Settings, and Other Parameter Settings

 Copyright © Huawei Technologies Co., Ltd.

No.	Contents
5	Energy Management: Negative Rate Optimization and Energy Management Assistant
6	Commissioning Smart Appliances and Huawei Chargers

For details about the device commissioning procedure, see the *SmartAssistant Networking Commissioning Manual*. The commissioning manual varies depending on the app. Refer to the manual corresponding to the app in use.

Smart Dongle Networking and Inverter Direct Connection

No.	Contents
1	Downloading the App and Registering an Installer Account
2	Quick Settings
3	Connecting to a Plant and Registering an Account
4	Setting Parameters: Power Control, Battery Parameter Settings, and Other Parameter Settings
5	Energy Management: Negative Rate Optimization and Energy Management Assistant

For details about the device commissioning procedure, see the Smart Dongle Networking and Inverter Direct Connection Commissioning Manual. The commissioning manual varies depending on the app. Refer to the manual corresponding to the app in use.

 Copyright © Huawei Technologies Co., Ltd.

8 System Maintenance

DANGER

- Wear personal protective equipment and use dedicated insulated tools to avoid electric shocks or short circuits.

WARNING

- Before performing maintenance, power off the equipment, follow the instructions on the delayed discharge label, and wait for a period of time as specified to ensure that the equipment is not energized.

8.1 System Power-Off

Precautions

WARNING

After the inverter powers off, the remaining electricity and heat may still cause electric shocks and body burns. Therefore, put on insulated gloves and begin operating the inverter five minutes after the power-off.

Procedure

Step 1 Send a shutdown command on the App.

Step 2 Turn off the AC switch between the inverter and the power grid.

Step 3 Turn off the DC switch at the bottom of the inverter.

Step 4 (Optional) Install the locking screw for the DC switch.

 Copyright © Huawei Technologies Co., Ltd.

Figure 8-1 Installing a locking screw for the DC switch

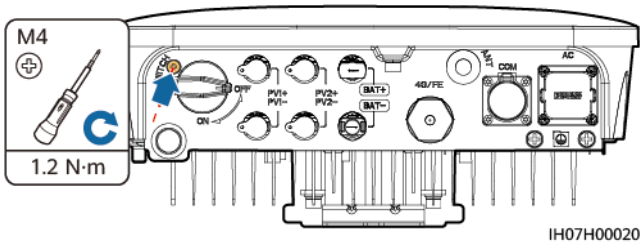

Step 5 Turn off the DC switch between the inverter and PV strings.

Step 6 (Optional) Turn off the battery switch between the inverter and batteries.

----End

8.2 Routine Maintenance

To ensure that the inverter can operate properly for a long term, you are advised to perform routine maintenance on it as described in this chapter.

CAUTION

Before cleaning the inverter, connecting cables, and maintaining the grounding reliability, power off the inverter (see **8.1 System Power-Off** for details).

Table 8-1 Maintenance checklist

Check Item	Check Method	Maintenance Interval
System cleanliness	Check periodically that the heat sinks are free from obstacles and dust.	Once every 6 to 12 months
System running status	• Check that the inverter is not damaged or deformed. • Check that the inverter operates with no abnormal sound. • Check that all inverter parameters are correctly set during operation.	Once every six months
Electrical connection	• Check that cables are secured. • Check that cables are intact, and that in particular, the parts touching the metallic surface are not scratched. • Check that unused DC input terminals, battery terminals, COM ports, ANT ports, and Smart Dongle waterproof covers are locked.	The first inspection is 6 months after the initial commissioning. From then on, the interval can be 6 to 12 months.

 Copyright © Huawei Technologies Co., Ltd.

Check Item	Check Method	Maintenance Interval
Grounding reliability	Check that ground cables are securely connected.	The first inspection is 6 months after the initial commissioning. From then on, the interval can be 6 to 12 months.

8.3 Troubleshooting

For details about alarms, see the **Inverter Alarm Reference**.

 Copyright © Huawei Technologies Co., Ltd.

9 Inverter Disposal

9.1 Removing a Inverter

Procedure

Step 1 Power off the inverter. For details, see **8.1 System Power-Off**.

Step 2 Disconnect all cables from the inverter, including signal cables, DC input power cables, battery cables, AC output power cables, and PE cables.

Step 3 Remove the WLAN antenna or the Smart Dongle from the inverter.

Step 4 Remove the inverter from the mounting bracket.

Step 5 Remove the mounting bracket.

----End

9.2 Packing a Inverter

- If the original packaging is available, put the inverter inside it and then seal it using adhesive tape.
- If the original packaging is unavailable, put the inverter inside a suitable hard carton and seal it properly.

9.3 Disposing a Inverter

If the inverter service life expires, dispose the inverter according to the local disposal rules for electrical equipment and electronic component waste.

 Copyright © Huawei Technologies Co., Ltd.

10 Technical Specifications

Efficiency

Technical Specification	SUN2000-2KTL-L1	SUN2000-3KTL-L1	SUN2000-3.68KTL-L1	SUN2000-4KTL-L1	SUN2000-4.6KTL-L1	SUN2000-5KTL-L1	SUN2000-6KTL-L1
Maximum efficiency	98.2%	98.3%	98.4%	98.4%	98.4%	98.4%	98.4%
European weighted efficiency	96.7%	97.3%	97.3%	97.5%	97.7%	97.8%	97.8%

Input

Technical Specifications	SUN2000-2KTL-L1	SUN2000-3KTL-L1	SUN2000-3.68KTL-L1	SUN2000-4KTL-L1	SUN2000-4.6KTL-L1	SUN2000-5KTL-L1	SUN2000-6KTL-L1
Maximum input voltage[a]	600 V						
Maximum input current (per MPPT)	12.5 A (Subject to the product nameplate)						
Maximum short-circuit current (per MPPT)	18 A (Subject to the product nameplate)						
Operating voltage range	80–600 V						
Startup voltage	100 V						
MPPT voltage range	90–560 V						
Rated input voltage	360 V						

 Copyright © Huawei Technologies Co., Ltd.

Technical Specifications	SUN2000-2KTL-L1	SUN2000-3KTL-L1	SUN2000-3.68KTL-L1	SUN2000-4KTL-L1	SUN2000-4.6KTL-L1	SUN2000-5KTL-L1	SUN2000-6KTL-L1
Power supply	2						
Number of MPPTs	2						
Battery normal voltage	450 Vdc						
Battery voltage range	350-600 Vdc						
Battery maximum current	15 A						
Battery type	Li-ion						
Note a: The maximum input voltage includes the PV input voltage and battery input voltage.							

Output (On grid)

Technical Specifications	SUN2000-2KTL-L1	SUN2000-3KTL-L1	SUN2000-3.68KTL-L1	SUN2000-4KTL-L1	SUN2000-4.6KTL-L1	SUN2000-5KTL-L1	SUN2000-6KTL-L1
Rated output power	2000 W	3000 W	3680 W	4000 W	4600 W	5000 W[a]	6000 W
Maximum apparent power	2200 VA	3300 VA	3680 VA	4400 VA	5000 VA[b]	5500 VA[c]	6000 VA
Rated output voltage	220 V /230 V /240 V	220 V /230 V /240 V	230 V /240 V	220 V /230 V /240 V	220 V /230 V /240 V	220 V /230 V /240 V	220 V /230 V /240 V
Rated power grid frequency	50 Hz/60 Hz						
Maximum output current	10 A	15 A	16 A	20 A	23 A	25 A	27.3 A
Rated output current	9.1 A /8.7 A /8.3 A	13.6 A /13.0 A /12.5 A	16.0 A /15.3 A	18.2 A /17.4 A /16.7 A	20.9 A /20.0 A /19.2 A	22.7 A /21.7 A /20.8 A	27.3 A /26.1 A /25.0 A
Rated apparent power	2 kVA	3 kVA	3.68 kVA	4 kVA	4.6 kVA	5 kVA	6 kVA
Inrush current	10 A	15 A	16 A	20 A	23 A	25 A	27.3 A

 Copyright © Huawei Technologies Co., Ltd.

Technical Specifications	SUN2000-2KTL-L1	SUN2000-3KTL-L1	SUN2000-3.68KTL-L1	SUN2000-4KTL-L1	SUN2000-4.6KTL-L1	SUN2000-5KTL-L1	SUN2000-6KTL-L1
Max output fault current	30.12 A	45.18 A	55.42 A	60.24 A	69.28 A	75.3 A	90.37 A
Max output overcurrent protection	12 A	18 A	19.2 A	24 A	27.6 A	30 A	32.76 A
Power factor	0.8 leading and 0.8 lagging						
Maximum total harmonic distortion (rated power)	≤ 3%						
Note a: The rated output power is 5000 W for the AS4777 grid code. Note b: The maximum apparent power is 4600 VA for the VDE-AR-N 4105 grid code, and 5000 VA for the AS4777 grid code. Note c: The maximum apparent power is 5000 VA for the AS4777 grid code.							

Output (Off grid)

Technical Specifications	SUN2000-2KTL-L1	SUN2000-3KTL-L1	SUN2000-3.68KTL-L1	SUN2000-4KTL-L1	SUN2000-4.6KTL-L1	SUN2000-5KTL-L1	SUN2000-6KTL-L1
Rated apparent power	2000 VA	3000 VA	3680 VA	4000 VA	4600 VA	5000 VA	5000 VA
Peak apparent power	110%, 10 s						

Protection

Technical Specifications	SUN2000-2KTL-L1	SUN2000-3KTL-L1	SUN2000-3.68KTL-L1	SUN2000-4KTL-L1	SUN2000-4.6KTL-L1	SUN2000-5KTL-L1	SUN2000-6KTL-L1
Anti-islanding protection	Supported						
DC reverse polarity protection	Supported						
Insulation resistance detection	Supported						

 Copyright © Huawei Technologies Co., Ltd.

Technical Specifications	SUN2000-2KTL-L1	SUN2000-3KTL-L1	SUN2000-3.68KTL-L1	SUN2000-4KTL-L1	SUN2000-4.6KTL-L1	SUN2000-5KTL-L1	SUN2000-6KTL-L1
Residual current monitoring unit (RCMU)	Supported						
AC short-circuit protection	Supported						
AC overcurrent protection	Supported						
Overtemperature protection	Supported						
DC surge protection	Supported						
AC surge protection	Supported						
AC overvoltage protection	Supported						
Arc fault protection	Supported						
AFCI	Supported						
Active anti-islanding method	AFD						
Protection class	I						
Overvoltage category	II(DC)/III(AC)						
PV and AC port	DVCC						
Communication port	DVCA						

Communications

Technical Specifications	SUN2000-2KTL-L1	SUN2000-3KTL-L1	SUN2000-3.68KTL-L1	SUN2000-4KTL-L1	SUN2000-4.6KTL-L1	SUN2000-5KTL-L1	SUN2000-6KTL-L1
Display	LED indicators; WLAN+App						
WLAN	Supported						
RS485	Supported						
Maximum RS485 communication distance	1000 m						

 Copyright © Huawei Technologies Co., Ltd.

Technical Specifications	SUN2000-2KTL-L1	SUN2000-3KTL-L1	SUN2000-3.68KTL-L1	SUN2000-4KTL-L1	SUN2000-4.6KTL-L1	SUN2000-5KTL-L1	SUN2000-6KTL-L1
Communications expansion module	WLAN-FE (optional)/4G (optional)						

Common Parameters

Technical Specification	SUN2000-2KTL-L1	SUN2000-3KTL-L1	SUN2000-3.68KTL-L1	SUN2000-4KTL-L1	SUN2000-4.6KTL-L1	SUN2000-5KTL-L1	SUN2000-6KTL-L1
Topology	Non-Isolation						
IP rating	IP65						
Cooling mode	Natural cooling						
Dimensions (W x H x D)	365 mm x 375 mm x 156 mm (including the mounting bracket)						
Weight	12 kg						
Operating temperature	–25°C to +60°C (derated when the temperature is higher than +45°C)						–25°C to +60°C (derated when the temperature is higher than +40°C)
Humidity	0–100% RH						
Operating altitude	0–4000 m (derated above 2000 m)						

 Copyright © Huawei Technologies Co., Ltd.

Wireless Communication Parameters

Specifications	Inverter Built-in WiFi	WLAN-FE Smart Dongle	4G Smart Dongle
Frequency	2400–2483.5 MHz	SDongleA-05: 2400–2483.5 MHz	SDongleA-03-EU: ● Supports LTE-FDD: B1/B3/B7/B8/B20. ● Supports LTE-TDD: B38/B40. ● Supports WCDMA/HSDPA/HSUPA/HSPA+: B1/B8. ● Supports GSM/GPRS/EDGE: 900 MHz/1800 MHz. SDongleB-06-EU (WiFi): 2400–2483.5 MHz SDongleB-06-EU (4G): ● Supports LTE-FDD: B1/B3/B5/B8. ● Supports LTE-TDD: B7/B20/B28/B38/B40/B41. ● Supports GSM/GPRS/EDGE: 900 MHz/1800 MHz.
Protocol standard	WLAN 802.11b/g/n	SDongleA-05: WLAN 802.11b/g/n	SDongleA-03-EU: ● Supports LTE-FDD (with receive diversity): B1/B3/B7/B8/B20/B28. ● Supports LTE-FDD (with receive diversity): B38/B40/B41. ● Supports WCDMA: B1/B8. ● Supports GSM: 900 MHz/1800 MHz. ● Supports digital audio. SDongleB-06-EU (WiFi): WLAN 802.11b/g/n SDongleB-06-EU (4G): ● Supports LTE FDD (with receive diversity): B1/B3/B5/B8. ● Supports LTE-TDD (with receive diversity): B7/B20/B28/B38/B40/B41. ● Supports GSM: 900 MHz/1800 MHz. ● Supports digital audio.

 Copyright © Huawei Technologies Co., Ltd.

Specifications	Inverter Built-in WiFi	WLAN-FE Smart Dongle	4G Smart Dongle
Bandwidth	20 MHz/40 MHz (optional)	20 MHz/40 MHz (optional)	LTE features: ● Supports a maximum of 3GPP R8 non-CA Cat 4 FDD and TDD. ● Supports 1.4 MHz/3 MHz/5 MHz/10 MHz/15 MHz/20 MHz RF bandwidth. ● Supports MIMO in the downlink. ● LTE-FDD: maximum downlink rate of 150 Mbit/s and maximum uplink rate of 50 Mbit/s ● LTE-TDD: maximum downlink rate of 130 Mbit/s and maximum uplink rate of 30 Mbit/s UMTS features: ● Supports 3GPP R7 HSDPA+, HSDPA, HSUPA, and WCDMA. ● Supports QPSK and 16QAM modulation. ● HSDPA+: maximum downlink rate of 21 Mbit/s ● HSUPA: maximum uplink rate of 5.76 Mbit/s ● WCDMA: maximum downlink rate of 384 kbit/s and maximum uplink rate of 384 kbit/s GSM features: GPRS: ● Supports GPRS multislot class 12. ● Coding schemes: CS-1, CS-2, CS-3, and CS-4 ● Maximum downlink rate: 85.6 kbit/s; maximum uplink rate: 85.6 kbit/s EDGE: ● Supports EDGE multislot class 12. ● Supports GMSK and 8-PSK modulation and coding schemes. ● Downlink coding format: MCS 1–9 ● Uplink coding format: MCS 1–9 ● Maximum downlink rate: 236.8 kbit/s; maximum uplink rate: 236.8 kbit/s SDongleB-06-EU (WiFi): 20 MHz/40 MHz (optional)

 Copyright © Huawei Technologies Co., Ltd.

Specifications	Inverter Built-in WiFi	WLAN-FE Smart Dongle	4G Smart Dongle
Maximum transmit power	≤ 20 dBm EIRP	≤ 20 dBm EIRP	• Class 4 (33 dBm±2 dB), EGSM900 frequency band • Class 1 (30 dBm±2 dB), DCS1800 frequency band • Class E2 (27 dBm±3 dB), EGSM900 8-PSK • Class E2 (26 dBm±3 dB), DCS1800 8-PSK • Class 3 (24 dBm+1/–3 dB), WCDMA frequency band • Class 3 (23 dBm±2 dB), LTE-FDD frequency band • Class 3 (23 dBm±2 dB), LTE-TDD frequency band SDongleB-06-EU (WiFi): ≤ 20 dBm EIRP

NOTE

The SDongleA-03 will no longer be placed on the market.

 Copyright © Huawei Technologies Co., Ltd.

A Grid Code

NOTE

The grid codes are subject to change. The listed codes are for reference only.

Table A-1 Grid Code

National/ Regional Grid Code	Description	SUN2000-2KTL-L1	SUN2000-3KTL-L1	SUN2000-3.68KTL-L1	SUN2000-4KTL-L1	SUN2000-4.6KTL-L1	SUN2000-5KTL-L1	SUN2000-6KTL-L1
VDE-AR-N-4105	Germany LV power grid	Supported	Supported	Supported	Supported	Supported	-	-
UTE C 15-712-1(A)	France mainland power grid	Supported	Supported	Supported	Supported	Supported	Supported	Supported
UTE C 15-712-1(B)	France island power grid	Supported	Supported	Supported	Supported	Supported	Supported	Supported
UTE C 15-712-1(C)	France island power grid	Supported	Supported	Supported	Supported	Supported	Supported	Supported
FRANCE-EN50549-230	France FDC11-519-11	Supported	Supported	Supported	Supported	Supported	Supported	Supported

 Copyright © Huawei Technologies Co., Ltd.

National/ Regional Grid Code	Description	SUN2000-2KTL-L1	SUN2000-3KTL-L1	SUN2000-3.68KTL-L1	SUN2000-4KTL-L1	SUN2000-4.6KTL-L1	SUN2000-5KTL-L1	SUN2000-6KTL-L1
CEI0-21	Italy power grid	Supported	Supported	Supported	Supported	Supported	Supported	Supported
NTS	Spain power grid	Supported	Supported	Supported	Supported	Supported	Supported	Supported
RD1699/661	Spain LV power grid	Supported	Supported	Supported	Supported	Supported	Supported	Supported
PO12.3	Spain LV power grid	Supported	Supported	Supported	Supported	Supported	Supported	Supported
C10/11	Belgium power grid	Supported	Supported	Supported	Supported	Supported	Supported	-
IEC61727	IEC 61727 LV (50 Hz)	Supported	Supported	Supported	Supported	Supported	Supported	Supported
IEC61727-60Hz	IEC 61727 LV (60 Hz)	Supported	Supported	Supported	Supported	Supported	Supported	Supported
TAI-PEA	Thailand grid-tied standard power grid	-	Supported	-	-	-	Supported	-
TAI-MEA	Thailand grid-tied standard power grid	-	Supported	-	-	-	Supported	-
EN50549-LV	Ireland power grid	Supported	Supported	Supported	Supported	Supported	Supported	Supported
EN50549-SE	Sweden LV	Supported	Supported	Supported	Supported	Supported	Supported	Supported

 Copyright © Huawei Technologies Co., Ltd.

National/ Regional Grid Code	Description	SUN2000-2KTL-L1	SUN2000-3KTL-L1	SUN2000-3.68KTL-L1	SUN2000-4KTL-L1	SUN2000-4.6KTL-L1	SUN2000-5KTL-L1	SUN2000-6KTL-L1
EN50549-PL	Polish power grid	Supported	Supported	Supported	Supported	Supported	Supported	Supported
ABNT NBR 16149	Brazil power grid	Supported	Supported	-	Supported	-	Supported	Supported
Fuel-Engine-Grid	Diesel generator hybrid power grid	Supported	Supported	Supported	Supported	Supported	Supported	Supported
Fuel-Engine-Grid-60Hz	Diesel generator hybrid power grid	Supported	Supported	Supported	Supported	Supported	Supported	Supported
Austria	Austrian power grid	Supported	Supported	Supported	-	-	-	-
G98	UK G98 power grid	Supported	Supported	Supported	Supported	-	-	-
G99-TYPEA-LV	UK G99_TypeA_LV power grid	Supported	Supported	Supported	Supported	Supported	Supported	Supported
NRS-097-2-1	South Africa Power Grid	Supported	Supported	Supported	Supported	Supported	Supported	Supported
SWITZERLAND-NA/EEA:2020-LV230	Switzerland	Supported	Supported	Supported	Supported	Supported	Supported	Supported
HONGKONG	Hong Kong LV power grid	Supported	Supported	Supported	Supported	Supported	Supported	Supported

 Copyright © Huawei Technologies Co., Ltd.

National/ Regional Grid Code	Description	SUN2000-2KTL-L1	SUN2000-3KTL-L1	SUN2000-3.68KTL-L1	SUN2000-4KTL-L1	SUN2000-4.6KTL-L1	SUN2000-5KTL-L1	SUN2000-6KTL-L1
DUBAI	DUBAI LV power grid	Supported	Supported	Supported	Supported	-	Supported	Supported
SINGAPORE	Singapore LV power grid	Supported	Supported	Supported	Supported	Supported	Supported	Supported
Island-Grid	Off-grid grid code	Supported	Supported	Supported	Supported	Supported	Supported	Supported
DENMARK-EN50549-DK1-LV230	Denmark power grid	Supported	Supported	Supported	Supported	Supported	Supported	Supported
DENMARK-EN50549-DK2-LV230	Denmark power grid	Supported	Supported	Supported	Supported	Supported	Supported	Supported
AS4777	Australia power grid	Supported	Supported	-	Supported	Supported	Supported	Supported
AS4777-WP	Australia power grid	Supported	Supported	-	Supported	Supported	Supported	Supported
AS4777_ACT	Australia power grid	Supported	Supported	-	Supported	Supported	Supported	Supported
AS4777_NSW_ESS	Australia power grid	Supported	Supported	-	Supported	Supported	Supported	Supported
AS4777_NSW_AG	Australia power grid	Supported	Supported	-	Supported	Supported	Supported	Supported
AS4777_QLD	Australia power grid	Supported	Supported	-	Supported	Supported	Supported	Supported

 Copyright © Huawei Technologies Co., Ltd.

National/ Regional Grid Code	Description	SUN2000-2KTL-L1	SUN2000-3KTL-L1	SUN2000-3.68KTL-L1	SUN2000-4KTL-L1	SUN2000-4.6KTL-L1	SUN2000-5KTL-L1	SUN2000-6KTL-L1
AS4777_SA	Australia power grid	Supported	Supported	-	Supported	Supported	Supported	Supported
AS4777_VIC	Australia power grid	Supported	Supported	-	Supported	Supported	Supported	Supported
AUSTRALIA-AS4777_A-LV230	Australia power grid	Supported	Supported	-	Supported	Supported	Supported	Supported
AUSTRALIA-AS4777_B-LV230	Australia power grid	Supported	Supported	-	Supported	Supported	Supported	Supported
AUSTRALIA-AS4777_C-LV230	Australia power grid	Supported	Supported	-	Supported	Supported	Supported	Supported
AUSTRALIA-AS4777_NZ-LV230	Australia power grid	Supported	Supported	-	Supported	Supported	Supported	Supported
OMAN	Oman low-voltage power grid	Supported	Supported	Supported	Supported	Supported	Supported	Supported
ANRE	Romania low-voltage power grid	Supported	Supported	Supported	Supported	Supported	Supported	Supported
FINLAND-EN50549-LV230	Finland power grid	Supported	Supported	Supported	Supported	Supported	Supported	Supported

 Copyright © Huawei Technologies Co., Ltd.

National/ Regional Grid Code	Description	SUN2000-2KTL-L1	SUN2000-3KTL-L1	SUN2000-3.68KTL-L1	SUN2000-4KTL-L1	SUN2000-4.6KTL-L1	SUN2000-5KTL-L1	SUN2000-6KTL-L1
Philippines	Philippines low-voltage power grid	Supported	Supported	Supported	Supported	Supported	Supported	Supported
NC2022	New Caledonia power grid	-	Supported	-	-	-	Supported	Supported
NEW CALEDONIA-LV230	New Caledonia power grid	-	Supported	-	-	-	Supported	Supported
CZECH-EN50549-LV230	Czech power grid	Supported	Supported	Supported	-	-	-	-
BRAZIL-P140-LV220	Brazil P140 power grid	Supported	Supported	-	Supported	-	Supported	Supported

 Copyright © Huawei Technologies Co., Ltd.

B Resetting Password

Step 1 Check that the AC and DC sides of the inverter are both powered on, and indicators and are steady green or blinking slowly for more than 3 minutes.

Step 2 Complete the following operations within 4 minutes:

Turn off the AC switch and set **DC SWITCH** to **OFF** at the bottom of the inverter. If the inverter is connected to a battery, turn off the battery switch. Wait until all LED indicators on the inverter panel turn off.

Turn on the AC switch and set **DC SWITCH** to **ON**. Wait about 90s and check that indicator is blinking green slowly.

Turn off the AC switch and set **DC SWITCH** to **OFF**. Wait until all LED indicators on the inverter panel turn off.

Turn on the AC switch and set **DC SWITCH** to **ON**. Wait until all LED indicators on the inverter panel blink and then turn off after 30s.

Step 3 Reset the password within 10 minutes. (If no operation is performed within 10 minutes, all parameters of the inverter remain unchanged.)

1. Wait until indicator blinks green slowly.
2. Connect to the app using the initial WLAN hotspot name (SSID) and initial password (PSW), which can be obtained from the label on the side of the inverter.
3. On the login screen, set a new password and log in to the app.

Step 4 Set router and management system parameters to implement remote management.

----End

 Copyright © Huawei Technologies Co., Ltd.

C Rapid Shutdown

When all PV modules connected to the solar inverter are configured with optimizers, the PV system shuts down quickly and reduces the output voltage of the PV string to below 30 V within 30 seconds. If optimizers are configured for some PV modules, the rapid shutdown function is not supported.

Perform the following step to trigger rapid shutdown:

- Method 1: Use the rapid shutdown function. Set **Dry contact function** to **DI Rapid Shutdown**. Connect the access switch to pins 7 and 5 of the inverter communications terminal. The switch is turned off by default. When the switch is turned on, rapid shutdown is triggered.
- Method 2: Turn off the AC switch between the solar inverter and the power grid. (If the inverter supports the off-grid function and **Off-grid mode** is enabled by choosing **Settings > Feature parameters** on the home screen, turning off the AC switch will not trigger a rapid shutdown.)
- Method 3: Turn off the DC switch at the bottom of the inverter. (If an extra DC switch is connected to the input side of the inverter, turning off this DC switch will not trigger rapid shutdown.)
- Method 4: If **AFCI** is enabled, the inverter automatically detects arc faults, triggering a rapid shutdown.

 Copyright © Huawei Technologies Co., Ltd.

D System Shutdown via DI

Function

If the **Shut down system via DI** function is enabled, the inverter works properly when the switch is on and can be shut down within 5 seconds after the switch is turned off.

Procedure

Step 1 Connect pins 5 and 7 of the inverter communications terminal to the switch.

Step 2 Choose **Settings** > **Feature parameters** > **Dry contact function** and set **Dry contact function** to **Shut down system via DI**.

----End

 Copyright © Huawei Technologies Co., Ltd.

E Locating Insulation Resistance Faults

If the ground resistance of a PV string connected to a solar inverter is too low, the solar inverter generates a **Low Insulation Resistance** alarm.

To locate the fault, connect each PV string to a solar inverter, power on and check the solar inverter, and locate the fault based on the alarm information reported by the App. If a system is not configured with any optimizer, skip the corresponding operations. Perform the following steps to locate an insulation resistance fault.

NOTICE

If two or more ground insulation faults occur in a single PV string, the following method cannot locate the fault. You need to check the PV modules one by one.

Step 1 The AC power supply is connected, and set the DC switch at the bottom of the solar inverter to OFF. If the solar inverter connects to batteries, wait for 1 minute, and turn off the battery switch and then the auxiliary power switch of the battery.

Step 2 Connect each PV string to the solar inverter and set the DC switch to ON. If the solar inverter status is **Shutdown: Command**, choose **Device Commissioning** > **Maintenance** > **Inverter ON/OFF** on the App and send a startup command.

Step 3 Log in to the App and choose **My** > **Device Commissioning**. On the **Device Commissioning** screen, connect and log in to the solar inverter, and access the **Alarm management** screen. Check whether the **Low Insulation Resistance** alarm is reported.

- If the **Low Insulation Resistance** alarm is not reported one minute after the DC is supplied, choose **Device Commissioning** > **Maintenance** > **Inverter ON/OFF** on the App and send a shutdown command. Set the DC switch to OFF and go to **Step 2** to connect another PV string to the solar inverter for a check.
- If a **Low Insulation Resistance** alarm is still reported one minute after the DC is supplied, check the percentage for possible short-circuit positions on the **Alarm details** page and go to **Step 4**.

 Copyright © Huawei Technologies Co., Ltd.

Figure E-1 Alarm details

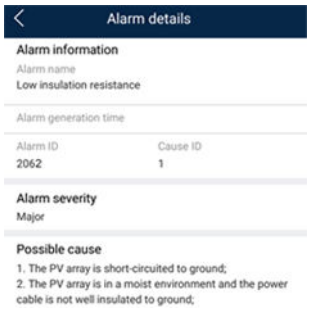

NOTE

- The positive and negative terminals of a PV string are connected to the PV+ and PV– terminals of the solar inverter. The PV– terminal represents a possibility of 0% for the short-circuit position and the PV+ terminal represents a possibility of 100% for the short-circuit position. Other percentages indicate that the fault occurs on a PV module or cable in the PV string.
- Possible fault position = Total number of PV modules in a PV string x Percentage of possible short-circuit positions. For example, if a PV string consists of 14 PV modules and the percentage of the possible short-circuit position is 34%, the possible fault position is 4.76 (14 x 34%), indicating that the fault is located near PV module 4, including the previous and the next PV modules and the cables of PV module 4. The solar inverter has a detection precision of ±1 PV module.

Figure E-2 Definition of the percentage of the short-circuit position

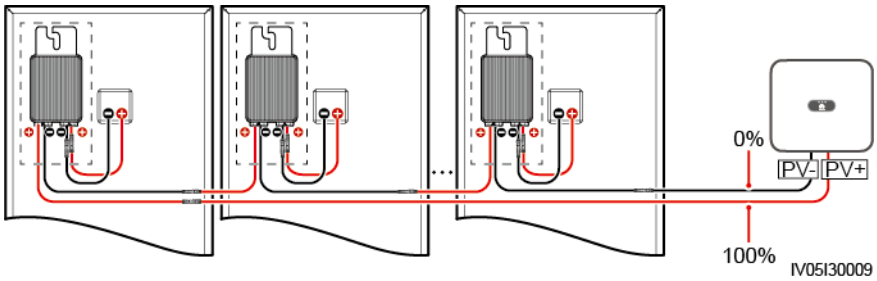

Step 4 Set the DC switch to OFF and check whether the connector or DC cable between the possible faulty PV modules and the corresponding optimizers, or those between the adjacent PV modules and the corresponding optimizers are damaged.

- If yes, replace the damaged connector or DC cable, set the DC switch to ON, and view the alarm information.
  - If the **Low Insulation Resistance** alarm is not reported one minute after the DC is supplied, the inspection on the PV string is complete. Choose **Device Commissioning** > **Maintenance** > **Inverter ON/OFF** on the App and send a shutdown command. Set the DC switch to OFF. Go to **Step 2** to check other PV strings. Then go to **Step 8**.
  - If the **Low Insulation Resistance** alarm is still reported one minute after the DC is supplied, go to **Step 5**.
- If not, go to **Step 5**.

Step 5 Set the DC switch to OFF, disconnect the possible faulty PV modules and corresponding optimizers from the PV string, and connect a DC extension cable with an MC4 connector to the adjacent PV modules or optimizers. Set the DC switch to ON and view the alarm information.

 Copyright © Huawei Technologies Co., Ltd.

- If the **Low Insulation Resistance** alarm is not reported one minute after the DC is supplied, the fault occurs on the disconnected PV module and optimizer. Choose **Device Commissioning** > **Maintenance** > **Inverter ON/OFF** on the App and send a shutdown command. Go to **Step 7**.
- If the **Low Insulation Resistance** alarm is still reported one minute after the DC is supplied, the fault does not occur on the disconnected PV module or optimizer. Go to **Step 6**.

Step 6 Set the DC switch to OFF, reconnect the removed PV module and optimizer, and repeat **Step 5** to check the adjacent PV modules and optimizers.

Step 7 Determine the position of the ground insulation fault.

1. Disconnect the possible faulty PV module from the optimizer.
2. Set the DC switch to OFF.
3. Connect the possible faulty optimizer to the PV string.
4. Set the DC switch to ON. If the solar inverter status is **Shutdown: Command**, choose **Device Commissioning** > **Maintenance** > **Inverter ON/OFF** on the App and send a startup command. Check whether the **Low Insulation Resistance** alarm is reported.
   - If the **Low Insulation Resistance** alarm is not reported one minute after the solar inverter is powered on, the PV module is faulty. Choose **Device Commissioning** > **Maintenance** > **Inverter ON/OFF** on the App and send a shutdown command.
   - If the **Low Insulation Resistance** alarm is still reported one minute after the solar inverter is powered on, the optimizer is faulty.
5. Set the DC switch to OFF. Replace the faulty component to rectify the insulation resistance fault. Go to **Step 2** to check other PV strings. Then go to **Step 8**.

Step 8 If the solar inverter connects to batteries, turn on the auxiliary power switch of the battery and then the battery switch. Set the DC switch to ON. If the solar inverter status is **Shutdown: Command**, choose **Device Commissioning** > **Maintenance** > **Inverter ON/OFF** on the App and send a startup command.

----End

 Copyright © Huawei Technologies Co., Ltd.

F Contact Information

If you have any questions about this product, please contact us.

https://digitalpower.huawei.com

Path: **About Us** > **Contact Us** > **Global Service Hotlines**

To ensure faster and better services, we kindly request your assistance in providing the following information:

- Model
- Serial number (SN)
- Software version
- Alarm ID or name
- Brief description of the fault symptom

 Copyright © Huawei Technologies Co., Ltd.

NOTE

EU Representative Information: Huawei Technologies Hungary Kft.
Add.: HU-1133 Budapest, Váci út 116-118., 1. Building, 6. floor.
Email: hungary.reception@huawei.com

 Copyright © Huawei Technologies Co., Ltd.

G Certificate Management and Maintenance

G.1 Initial Certificate Risk Disclaimer

Huawei's initial certificates are mandatory identity credentials for Huawei devices before delivery. The disclaimer statements for using the certificates are as follows:

1. Huawei's initial certificates are used only to establish initial security channels for devices to access the customer network during deployment.
2. Initial certificates have a validity period. The validity period of Huawei's root certificates expires in 2041 and 2099, respectively, and the validity period of identity certificates expires earlier than that of root certificates.
3. After devices access the customer network, the management responsibilities of the devices and digital certificates are transferred to the customer. Huawei recommends that the customer replace the initial certificates used by devices on the live network with customer's own certificates, and use certificates with a short validity period and periodically replace the certificates in accordance with industry best practices. This helps mitigate the risk of private key leakage of digital certificates and prevent service interruption caused by certificate expiration.

For details about the rights and responsibilities related to initial certificates, see **Rights and Responsibilities of Initial Digital Certificates on Huawei Devices**.

G.2 Application Scenarios of Initial Certificates

Table G-1 Certificate list

Usage	Scenario	Replacement Guide
Management system certificate	Authenticates the validity of the inverter when the inverter connects to and communicates with the management system through Modbus-TCP.	**G.3 Updating a Certificate**

 Copyright © Huawei Technologies Co., Ltd.

Usage	Scenario	Replacement Guide
App communication certificate	Authenticates the validity of the inverter when the mobile app connects to and communicates with the inverter through Modbus-TCP.	

G.3 Updating a Certificate

Initial certificates are used only for commissioning and are not for commercial use. Replace the initial certificates with new ones to improve communication security. To prevent security risks caused by expired certificates, you are advised to periodically update certificates.

Prerequisites

You have applied for a new certificate from the CA and have obtained the new certificate files. **Table G-2** lists the certificate requirements.

Table G-2 Certificate requirements

Parameter	Requirement
Certificate signature algorithm	Use industry-leading security algorithms, such as sha256WithRSAEncryption or sha256ECDSA.
Key length	• For keys encrypted using RSA, the recommended length is 3072 bits or longer. • For keys encrypted using ECDSA, the length can be 256 or 384 bits. **NOTE** RSA keys shorter than 2048 bits or ECDSA keys shorter than 256 bits are insecure. For security purposes, ensure that the private key of the ER certificate is an RSA key of 3072 bits or longer or an ECDSA key of 256 bits or longer.
Certificate storage format	.crt and .cer are supported. The certificate in .crt format must be encoded using Base64. • The certificate file in .crt format is as follows: – **client.crt**: identity certificate file – **client_key.pem**: private key of the identity certificate • The certificate file in .cer format is as follows: – **client.cer**: identity certificate file – **client_key.pem**: private key of the identity certificate.
Private key file format	PKCS#8 format.

 Copyright © Huawei Technologies Co., Ltd.

Parameter	Requirement
Password complexity of the private key file	Contain 8 to 64 characters, including at least two types of the following: ● Uppercase letters ● Lowercase letters ● Digits ● Special characters (excluding <>;+&/\\|%(),`$)

Procedure

1. Log in to the app using an installer account and use the app to locally scan the QR code to connect to the inverter.
2. Choose **Set** > **Communication configuration** > **Certificate management**.
3. Select the certificate to be replaced, upload the corresponding certificates (root certificate, customer certificate, and key file), and enter the key password to replace the certificate.
4. After the replacement is complete, tap **Replace current certificate**.

 Copyright © Huawei Technologies Co., Ltd.

H Acronyms and Abbreviations

A	
AC	alternating current
D	
DC	direct current
DCI	direct current identification
F	
FRT	fault ride through
H	
HVRT	high voltage ride-through
I	
ID	identifier
L	
LED	light emitting diode
LVRT	low voltage ride-through
M	
MAC	Media Access Control
MPPT	maximum power point tracking
P	
PE	protective earthing

 Copyright © Huawei Technologies Co., Ltd.

PV	photovoltaic
R	
RCMU	residual current monitoring unit
RH	relative humidity
S	
SN	serial number

 Copyright © Huawei Technologies Co., Ltd.