SmartLogger3000

User Manual

Issue	31
Date	2026-01-20

HUAWEI TECHNOLOGIES CO., LTD.

Copyright © Huawei Technologies Co., Ltd. 2026. All rights reserved.

No part of this document may be reproduced or transmitted in any form or by any means without prior written consent of Huawei Technologies Co., Ltd.

Trademarks and Permissions

HUAWEI and other Huawei trademarks are trademarks of Huawei Technologies Co., Ltd.
All other trademarks and trade names mentioned in this document are the property of their respective holders.

Notice

The purchased products, services and features are stipulated by the contract made between Huawei and the customer. All or part of the products, services and features described in this document may not be within the purchase scope or the usage scope. Unless otherwise specified in the contract, all statements, information, and recommendations in this document are provided "AS IS" without warranties, guarantees or representations of any kind, either express or implied.

The information in this document is subject to change without notice. Every effort has been made in the preparation of this document to ensure accuracy of the contents, but all statements, information, and recommendations in this document do not constitute a warranty of any kind, express or implied.

Huawei Technologies Co., Ltd.

Address: Huawei Industrial Base
Bantian, Longgang
Shenzhen 518129
People's Republic of China

Website: https://e.huawei.com

About This Document

Purpose

This document introduces the SmartLogger3000 (SmartLogger for short) and SmartModule1000 (SmartModule for short) in terms of installation, electrical connections, system operation and maintenance, and troubleshooting. Understand the SmartLogger and SmartModule features, functions, and safety precautions provided in this document before installing and operating the SmartLogger and SmartModule.

Statement

In this document, LUNA only refers to specific models of Huawei Smart String Grid Forming ESS and Smart PCS.

Intended Audience

This document is intended for operating personnel and qualified electricians of photovoltaic (PV) and energy storage plants.

Symbol Conventions

The symbols that may be found in this document are defined as follows:

Symbol	Description
DANGER	Indicates a hazard with a high level of risk which, if not avoided, will result in death or serious injury.
WARNING	Indicates a hazard with a medium level of risk which, if not avoided, could result in death or serious injury.
CAUTION	Indicates a hazard with a low level of risk which, if not avoided, could result in minor or moderate injury.

 Copyright © Huawei Technologies Co., Ltd.

Symbol	Description
NOTICE	Indicates a potentially hazardous situation which, if not avoided, could result in equipment damage, data loss, performance deterioration, or unanticipated results. NOTICE is used to address practices not related to personal injury.
NOTE	Supplements the important information in the main text. NOTE is used to address information not related to personal injury, equipment damage, and environment deterioration.

Change History

Changes between document issues are cumulative. The latest document issue contains all the changes made in earlier issues.

Issue 31 (2026-01-20)

Updated **4.1.11 Installing a SIM Card and a 4G Antenna**.

Updated **6.2.1 Preparations and WebUI Login**.

Updated **6.3.2 Setting Parameters for Connecting to the Management System**.

Updated **6.3.11 Setting PCS Parameters (213KTL-H0)**.

Updated **6.3.14 Setting ESS Parameters (Model 3)**.

Added **6.3.23 Setting Echonet**.

Added **E EMC Information**.

Issue 30 (2025-12-20)

Updated **6.1 Introduction to WebUI**.

Updated **6.2.2 Commissioning Using the Deployment Wizard**.

Updated **6.3.2 Setting Parameters for Connecting to the Management System**.

Updated **6.3.4 Setting SPPC Communications Parameters**.

Updated **6.3.9.1 Running Parameters**.

Updated **6.7 Setting Feature Parameters**.

Updated **9.1 Technical Specifications of the SmartLogger**.

 Copyright © Huawei Technologies Co., Ltd.

Issue 29 (2025-10-30)

Updated **4.1.4 Connecting an MBUS Cable**.

Updated **6.3.10 Setting PCS Parameters (100KTL and 200KTL Series)**.

Updated **6.3.11 Setting PCS Parameters (213KTL-H0)**.

Updated **6.4 Setting Battery Control Parameters**.

Updated **6.6.1 On-grid/Off-grid (PQ/VSG)**.

Updated **6.6.2 On-grid/Off-grid (VSG)**.

Updated **6.6.3 Off-Grid**.

Issue 28 (2025-09-25)

Updated **6.2.1 Preparations and WebUI Login**.

Updated **6.4 Setting Battery Control Parameters**.

Updated **8.13 Which Models of Power Meters and EMIs Are Supported by the SmartLogger?**.

Updated **9.1 Technical Specifications of the SmartLogger**.

Issue 27 (2025-08-25)

Updated **2.2.2 Networking**.

Updated **6.4 Setting Battery Control Parameters**.

Updated **D Certificate Management and Maintenance**.

Issue 26 (2025-06-30)

Updated **6.2.2 Commissioning Using the Deployment Wizard**.

Updated **6.3.10.1 Running Parameters**.

Updated **6.4 Setting Battery Control Parameters**.

Updated **6.6.3 Off-Grid**.

Updated **7.4.11 Force Start**.

Updated **7.5.2 Exporting Configuration Files from the SUN2000 App**.

Updated **8.1 How Do I Connect the SmartLogger to the SUN2000 App or FusionSolar App?**

Updated **8.4 How Do I Change the SSID and Password of the Built-in WLAN?**

Updated **9.1 Technical Specifications of the SmartLogger**.

Issue 25 (2025-04-20)

Updated **4.2.9 Connecting the PT Signal Cable**.

Updated **6.1.2 Permission Description**.

 Copyright © Huawei Technologies Co., Ltd.

Updated **6.2.2 Commissioning Using the Deployment Wizard**.

Updated **6.8.3 Setting Reactive Power Control**.

Issue 24 (2025-03-30)

Updated **4.1.11 Installing a SIM Card and a 4G Antenna**.

Updated **6.3 Parameter Settings**.

Updated **6.3.7 Setting GOOSE Communications Parameters**.

Updated **6.3.9.1 Running Parameters**.

Updated **6.3.11 Setting PCS Parameters (213KTL-H0)**.

Updated **6.3.13 Setting ESS Parameters (Model 2)**.

Updated **6.4 Setting Battery Control Parameters**.

Updated **6.6.2 On-grid/Off-grid (VSG)**.

Updated **6.8.2 Setting Active Power Control**.

Updated **7.4.6 License Management**.

Updated **7.4.12 Device Replacement**.

Updated **8.1 How Do I Connect the SmartLogger to the SUN2000 App or FusionSolar App?**

Issue 23 (2024-12-30)

Updated **4.1.11 Installing a SIM Card and a 4G Antenna**.

Updated **4.1.4 Connecting an MBUS Cable**.

Updated **4.2.3 Connecting the Ethernet Cable**.

Updated **6.2.2 Commissioning Using the Deployment Wizard**.

Updated **6.3.2 Setting Parameters for Connecting to the Management System**.

Updated **6.3.5 Setting Parameters for the Slave SmartLogger**.

Updated **6.3.6 Setting HTTPS Parameters**.

Updated **6.3.7 Setting GOOSE Communications Parameters**.

Updated **6.3.10 Setting PCS Parameters (100KTL and 200KTL Series)**.

Updated **6.3.18 Setting STS Parameters**.

Updated **6.6.1 On-grid/Off-grid (PQ/VSG)**.

Updated **6.6.2 On-grid/Off-grid (VSG)**.

Updated **6.6.3 Off-Grid**.

Updated **6.8.2 Setting Active Power Control**.

Updated **7.4.14 SOC One-Click Balancing**.

Updated **7.4.15 Wire Sequence Detection**.

Updated **7.4.5 Onsite Test**.

Updated **7.4.6 License Management**.

Updated **7.4.16 Batch Startup/Shutdown**.

Updated **7.4.17 IEC104 Test**.

Issue 22 (2024-09-30)

Updated **4.1.4 Connecting an MBUS Cable**.

Updated **6.1.2 Permission Description**.

Updated **6.2.2 Commissioning Using the Deployment Wizard**.

Updated **6.3.9.1 Running Parameters**.

Updated **6.3.11 Setting PCS Parameters (213KTL-H0)**.

Updated **6.3.14 Setting ESS Parameters (Model 3)**.

Updated Setting IEC103 Device Parameters.

Deleted section "Setting IEC 104 Device Parameters."

Updated **6.4 Setting Battery Control Parameters**.

Updated **6.6.1 On-grid/Off-grid (PQ/VSG)**.

Updated **6.6.2 On-grid/Off-grid (VSG)**.

Updated **6.6.3 Off-Grid**.

Updated **6.8.2 Setting Active Power Control**.

Updated **7.4.4 Device Log**.

Updated **7.4.6 License Management**.

Added **7.4.14 SOC One-Click Balancing**.

Updated **8.13 Which Models of Power Meters and EMIs Are Supported by the SmartLogger?**

Updated **8.15 How Do I Use Mobile Network Sharing?**

Updated **C Port Number List**.

Issue 21 (2024-07-30)

Updated **6.1.2 Permission Description**.

Updated **6.2.2 Commissioning Using the Deployment Wizard**.

Added **6.3.11 Setting PCS Parameters (213KTL-H0)**.

Added **6.3.13 Setting ESS Parameters (Model 2)**.

Updated **6.3.15 Setting PID Module Parameters**.

Updated **6.3.21 Setting IMD Parameters**.

Updated **7.4.1 Software Upgrade**.

Updated **7.4.2 Security Settings**.

Updated **7.4.4 Device Log**.

Updated **7.4.10 Adjusting the Total Energy Yield**.

Updated **D Certificate Management and Maintenance**.

Issue 20 (2024-04-15)

Updated **2.1.1 Model**.

Updated **6.1.1 WebUI Layout**.

Updated **6.1.2 Permission Description**.

Updated **6.2.2 Commissioning Using the Deployment Wizard**.

Updated **6.3.2 Setting Parameters for Connecting to the Management System**.

Updated **6.3.9.1 Running Parameters**.

Updated **6.3.9.3 Characteristic Curves**.

Updated **6.3.10.1 Running Parameters**.

Updated **6.3.12.4 Setting ESR Parameters**.

Added **6.3.22 Setting Relay Parameters**.

Updated **6.4 Setting Battery Control Parameters**.

Updated **6.6.1 On-grid/Off-grid (PQ/VSG)**.

Added **6.6.2 On-grid/Off-grid (VSG)**.

Updated **6.6.3 Off-Grid**.

Updated **6.6.4 Black Start**.

Updated **6.8.9 Setting Feed-in at Limited Current**.

Updated **7.4.4 Device Log**.

Updated **7.4.11 Force Start**.

Updated **7.4.2 Security Settings**.

Updated **7.4.3 System Maintenance**.

Added **7.4.13 Communication Records**.

Updated **8.13 Which Models of Power Meters and EMIs Are Supported by the SmartLogger?**.

Issue 19 (2024-02-23)

Updated **6.4 Setting Battery Control Parameters**.

Issue 18 (2024-01-30)

Updated **6.1.2 Permission Description**.

Updated **6.3.12.5 Setting HVAC Parameters**.

Added **6.8.9 Setting Feed-in at Limited Current**.

Updated **7.4.4 Device Log**.

Issue 17 (2023-12-15)

Updated **6.2.2 Commissioning Using the Deployment Wizard**.

Updated **6.3.9.1 Running Parameters**.

Updated **6.3.16 Setting Meter Parameters**.

Added **6.6 Setting Microgrid Control Parameters**.

Issue 16 (2023-11-07)

Updated **4.1.11 Installing a SIM Card and a 4G Antenna**.

Updated **6.2.1 Preparations and WebUI Login**.

Updated **6.2.2 Commissioning Using the Deployment Wizard**.

Updated **6.3.8.1 Setting Parameters for a Built-in MBUS Module**.

Updated **6.3.8.2.1 Setting SmartMBUS CCO01A Parameters**.

Updated **6.3.10 Setting PCS Parameters (100KTL and 200KTL Series)**.

Updated **6.3.12.1 Setting CMU Parameters**.

Added **6.3.21 Setting IMD Parameters**.

Updated **6.4 Setting Battery Control Parameters**.

Updated **6.7 Setting Feature Parameters**.

Updated **7.4.6 License Management**.

Updated **7.4.11 Force Start**.

Updated **A Product User Lists**.

Added **F Contact Information**.

Added **G Digital Power Customer Service**.

Issue 15 (2023-10-11)

Updated **6.3.16 Setting Meter Parameters**.

Updated **6.4 Setting Battery Control Parameters**.

Updated **6.8.7 Setting DRM Parameters**.

Added **7.4.12 Device Replacement**.

Issue 14 (2023-08-18)

Updated **2.1.2 Networking**.

Updated **6.2.2 Commissioning Using the Deployment Wizard**.

Added **6.3.4 Setting SPPC Communications Parameters**.

Updated **6.3.15 Setting PID Module Parameters**.

Updated **6.3.15.2 Setting SmartPID2000 Parameters**.

Updated **6.4 Setting Battery Control Parameters**.

Updated **6.7 Setting Feature Parameters**.

Updated **6.8.6 Setting Parameters for Smart Reactive Power Compensation**.

Updated **6.8.7 Setting DRM Parameters**.

Updated **7.4.6 License Management**.

Updated **8.3 How Do I Set Email Parameters?**

Updated **9.1 Technical Specifications of the SmartLogger**.

Issue 13 (2023-06-12)

Updated **2.1.3 Appearance**.

Updated **2.2.3 Appearance**.

Updated **6.2.1 Preparations and WebUI Login**.

Updated **6.3.2 Setting Parameters for Connecting to the Management System**.

Updated **6.3.8 Setting MBUS Parameters**.

Updated **6.8.2 Setting Active Power Control**.

Issue 12 (2023-04-20)

Updated **2.1.2 Networking**.

Updated **4.1.10 Connecting Fiber Jumpers**.

Updated **6.2.2 Commissioning Using the Deployment Wizard**.

Updated **6.3.2 Setting Parameters for Connecting to the Management System**.

Updated **6.3.8 Setting MBUS Parameters**.

Updated **6.3.15 Setting PID Module Parameters**.

Deleted "Setting Capacity Limit".

Updated **6.4 Setting Battery Control Parameters**.

Updated **6.5 Setting EMS Control Parameters**.

Added **6.7 Setting Feature Parameters**.

Issue 11 (2023-01-20)

Updated **1 Safety Information**.

Updated **6.3.12.2 Setting ESU Parameters**.

Updated **6.3.16 Setting Meter Parameters**.

Updated **6.4 Setting Battery Control Parameters**.

Updated **6.8.8.2 Setting NS Protection Remote Shutdown**.

Updated **7.4.11 Force Start**.

Updated **7.5 Device Replacement**.

Added **8.18 Resetting Password**.

Updated **8.13 Which Models of Power Meters and EMIs Are Supported by the SmartLogger?**

Updated **H Acronyms and Abbreviations**.

Issue 10 (2022-08-20)

Updated **6.1.2 Permission Description**.

Updated **6.2.1 Preparations and WebUI Login**.

Added **6.2.2 Commissioning Using the Deployment Wizard**.

Updated **6.3.5 Setting Parameters for the Slave SmartLogger**.

Added **6.3.7 Setting GOOSE Communications Parameters**.

Updated **6.3.9 Setting Inverter Parameters**.

Updated **6.3.10 Setting PCS Parameters (100KTL and 200KTL Series)**.

Updated **6.3.12.1 Setting CMU Parameters**.

Updated **6.3.12.2 Setting ESU Parameters**.

Updated **6.3.12.5 Setting HVAC Parameters**.

Updated **6.4 Setting Battery Control Parameters**.

Updated **6.3.18 Setting STS Parameters**.

Updated **6.8.2 Setting Active Power Control**.

Updated **6.8.3 Setting Reactive Power Control**.

Updated **7.3 Alarm Reference**.

Updated **7.4.4 Device Log**.

Added **7.4.11 Force Start**.

Issue 09 (2022-01-07)

Updated **2.1.2 Networking**.

Updated **2.2.2 Networking**.

Updated **6.1.1 WebUI Layout**.

Updated **6.1.2 Permission Description**.

Added **6.3.2 Setting Parameters for Connecting to the Management System**.

Updated **6.3.10 Setting PCS Parameters (100KTL and 200KTL Series)**.

Updated **6.3.12.1 Setting CMU Parameters**.

Updated **6.3.12.2 Setting ESU Parameters**.

Updated **6.3.12.5 Setting HVAC Parameters**.

Updated **6.4 Setting Battery Control Parameters**.

Added "Setting Capacity Limit".

Updated **6.5 Setting EMS Control Parameters**.

Updated **6.8.2 Setting Active Power Control**.

Updated **6.8.3 Setting Reactive Power Control**.

Updated **6.8.5 Setting Export Limitation Parameters**.

Updated **7.4.1 Software Upgrade**.

Updated **7.4.3 System Maintenance**.

Updated **7.4.4 Device Log**.

Added **7.4.8 Managing Users**.

Updated **7.4.9 Collecting Performance Data**.

Updated **7.4.10 Adjusting the Total Energy Yield**.

Updated **8.13 Which Models of Power Meters and EMIs Are Supported by the SmartLogger?**.

Issue 08 (2021-10-15)

Updated **2.1.2 Networking**.

Updated **2.2.2 Networking**.

Updated **6.1.1 WebUI Layout**.

Updated **6.1.2 Permission Description**.

Updated **6.2 Device Commissioning**.

Updated **6.2.1 Preparations and WebUI Login**.

Added Commissioning Using Deployment Wizard (V800R021C10).

Updated **6.3.1 Setting User Parameters**.

Updated Setting Parameters for Connecting to the Management System (V300R001C00).

Added **6.3.10 Setting PCS Parameters (100KTL and 200KTL Series)**.

Added **6.3.12.1 Setting CMU Parameters**.

Added **6.3.12.2 Setting ESU Parameters**.

Added **6.3.12.3 Setting ESC Parameters**.

Added **6.3.12.4 Setting ESR Parameters**.

Added **6.3.12.5 Setting HVAC Parameters**.

Added **6.4 Setting Battery Control Parameters**.

Updated **6.8.2 Setting Active Power Control**.

Updated **6.8.5 Setting Export Limitation Parameters**.

Updated **7.2 Troubleshooting**.

Updated **7.3 Alarm Reference**.

Updated **7.4.1 Software Upgrade**.

Updated **7.4.4 Device Log**.

Updated **C Port Number List**.

Updated **H Acronyms and Abbreviations**.

Issue 07 (2021-06-30)

Updated **6.1 Introduction to WebUI**.

Updated **6.1.2 Permission Description**.

Updated **6.3.9.1 Running Parameters**.

Added **6.3.9.4 Battery**.

Added **6.5 Setting EMS Control Parameters**.

Updated **6.8.2 Setting Active Power Control**.

Updated **7.4.4 Device Log**.

Updated **7.4.5 Onsite Test**.

Updated **8.13 Which Models of Power Meters and EMIs Are Supported by the SmartLogger?**.

Issue 06 (2021-03-20)

Updated Setting Parameters for Connecting to the Management System (V300R001C00).

Updated **6.3.9.1 Running Parameters**.

Updated **6.3.9.2 Tracking System**.

Updated **6.3.16.1 Setting DL/T645 Meter Parameters**.

Updated **6.3.16.2 Setting Modbus-RTU Meter Parameters**.

Updated **6.3.17.1 Setting Modbus-RTU EMI Parameters**.

Added **6.3.20 Smart Tracking Algorithm**.

Updated **6.8.2 Setting Active Power Control**.

Updated **6.8.5 Setting Export Limitation Parameters**.

Updated **6.8.6 Setting Parameters for Smart Reactive Power Compensation**.

Added **6.8.8 Setting Remote Shutdown**.

Updated **6.8.8.1 Setting Dry Contact Remote Shutdown**.

Added **6.8.8.2 Setting NS Protection Remote Shutdown**.

Added **7.4.3.1 Exporting Full Configuration Files**.

Added **7.4.3.2 Importing Full Configuration Files**.

Updated **8.15 How Do I Use Mobile Network Sharing?**

Added **8.16 WebUI Allows Login Only in Chinese or Prompts to Switch to Chinese After Login**.

Issue 05 (2020-09-30)

Updated Setting Parameters for Connecting to the Management System (V300R001C00).

Updated **6.3.8 Setting MBUS Parameters**.

Added **8.15 How Do I Use Mobile Network Sharing?**

Added **C Port Number List**.

Issue 04 (2020-03-11)

Updated **6.2.1 Preparations and WebUI Login**.

Issue 03 (2020-01-10)

Added the description about the SmartModule.

Issue 02 (2019-12-18)

Updated **6 WebUI Operations**.

Updated **9.1 Technical Specifications of the SmartLogger**.

Issue 01 (2019-09-24)

This issue is used for first office application (FOA).

Contents

About This Document ii

1 Safety Information 1

1.1 Personal Safety 2
1.2 Electrical Safety 4
1.3 Environment Requirements 6
1.4 Mechanical Safety 7

2 Product Overview 9

2.1 SmartLogger 9
2.1.1 Model 9
2.1.2 Networking 11
2.1.3 Appearance 17
2.2 SmartModule 23
2.2.1 Model 24
2.2.2 Networking 25
2.2.3 Appearance 26

3 Device Installation 32

3.1 Checking Before Installation 32
3.2 Tools 32
3.3 Installation Requirements 33
3.4 Installing the SmartLogger 34
3.5 Installing the SmartLogger and SmartModule 36
3.6 Installing a Power Adapter 39

4 Cable Connections 42

4.1 Connecting Cables to the SmartLogger 42
4.1.1 Preparing Cables 42
4.1.2 Connecting a PE Cable 43
4.1.3 Connecting an RS485 Communications Cable 43
4.1.4 Connecting an MBUS Cable 45
4.1.5 Connecting a DI Signal Cable 49
4.1.6 Connecting the Output Power Cable 50
4.1.7 Connecting the AI Signal Cable 50
4.1.8 Connecting the DO Signal Cable 51

4.1.9 Connecting the Ethernet Cable....52
4.1.10 Connecting Fiber Jumpers....53
4.1.11 Installing a SIM Card and a 4G Antenna....54
4.1.12 Connecting the 24 V Input Power Cable....57
4.2 Connecting Cables to the SmartModule....58
4.2.1 Preparing Cables....58
4.2.2 Connecting the PE Cable....58
4.2.3 Connecting the Ethernet Cable....59
4.2.4 Connecting the 12 V Input Power Cable....60
4.2.5 Connecting the RS485 Communications Cable....61
4.2.6 Connecting the DI Signal Cable....62
4.2.7 Connecting the Output Power Cable....63
4.2.8 Connecting the AI Signal Cable....64
4.2.9 Connecting the PT Signal Cable....65
4.2.10 Connecting the 24 V Input Power Cable....66

5 System Operation....68

5.1 Check Before Power-On....68
5.2 Powering On the System....68

6 WebUI Operations....70

6.1 Introduction to WebUI....70
6.1.1 WebUI Layout....71
6.1.2 Permission Description....72
6.2 Device Commissioning....72
6.2.1 Preparations and WebUI Login....73
6.2.2 Commissioning Using the Deployment Wizard....76
6.3 Parameter Settings....102
6.3.1 Setting User Parameters....102
6.3.2 Setting Parameters for Connecting to the Management System....104
6.3.3 Setting RS485 Communications Parameters....114
6.3.4 Setting SPPC Communications Parameters....116
6.3.5 Setting Parameters for the Slave SmartLogger....117
6.3.6 Setting HTTPS Parameters....119
6.3.7 Setting GOOSE Communications Parameters....119
6.3.8 Setting MBUS Parameters....122
6.3.8.1 Setting Parameters for a Built-in MBUS Module....122
6.3.8.2 Setting Parameters for an External MBUS Module....125
6.3.8.2.1 Setting SmartMBUS CCO01A Parameters....126
6.3.8.2.2 Setting SmartMBUS CCO01B Parameters....129
6.3.9 Setting Inverter Parameters....132
6.3.9.1 Running Parameters....133
6.3.9.2 Tracking System....154
6.3.9.3 Characteristic Curves....157

6.3.9.4 Battery 159
6.3.10 Setting PCS Parameters (100KTL and 200KTL Series) 162
6.3.10.1 Running Parameters 162
6.3.10.2 Characteristic Curve 181
6.3.11 Setting PCS Parameters (213KTL-H0) 182
6.3.12 Setting ESS Parameters (Model 1) 210
6.3.12.1 Setting CMU Parameters 211
6.3.12.2 Setting ESU Parameters 213
6.3.12.3 Setting ESC Parameters 213
6.3.12.4 Setting ESR Parameters 214
6.3.12.5 Setting HVAC Parameters 215
6.3.13 Setting ESS Parameters (Model 2) 217
6.3.14 Setting ESS Parameters (Model 3) 237
6.3.14.1 Setting ESR Parameters 244
6.3.15 Setting PID Module Parameters 245
6.3.15.1 Setting PID01 Parameters 247
6.3.15.1.1 PID Module Running Parameters 247
6.3.15.1.2 PID-PVBOX Running Parameters 250
6.3.15.1.3 PID-SSC Running Parameters 251
6.3.15.2 Setting SmartPID2000 Parameters 251
6.3.16 Setting Meter Parameters 256
6.3.16.1 Setting DL/T645 Meter Parameters 256
6.3.16.2 Setting Modbus-RTU Meter Parameters 259
6.3.17 Setting EMI Parameters 262
6.3.17.1 Setting Modbus-RTU EMI Parameters 262
6.3.17.2 Setting AI EMI Parameters 266
6.3.18 Setting STS Parameters 267
6.3.19 Setting Custom Device Parameters 270
6.3.20 Smart Tracking Algorithm 272
6.3.21 Setting IMD Parameters 273
6.3.22 Setting Relay Parameters 273
6.3.23 Setting Echonet 275
6.4 Setting Battery Control Parameters 275
6.5 Setting EMS Control Parameters 290
6.6 Setting Microgrid Control Parameters 293
6.6.1 On-grid/Off-grid (PQ/VSG) 294
6.6.2 On-grid/Off-grid (VSG) 298
6.6.3 Off-Grid 302
6.6.4 Black Start 305
6.7 Setting Feature Parameters 307
6.8 Power Grid Scheduling 308
6.8.1 Power Adjustment Description 308

6.8.2 Setting Active Power Control ... 309
6.8.3 Setting Reactive Power Control ... 318
6.8.4 Setting Parameters for Shutdown at High Feed-in Power ... 330
6.8.5 Setting Export Limitation Parameters ... 331
6.8.6 Setting Parameters for Smart Reactive Power Compensation ... 333
6.8.7 Setting DRM Parameters ... 335
6.8.8 Setting Remote Shutdown ... 337
6.8.8.1 Setting Dry Contact Remote Shutdown ... 337
6.8.8.2 Setting NS Protection Remote Shutdown ... 339
6.8.9 Setting Feed-in at Limited Current ... 341

7 Device Maintenance ... 343
7.1 Routine Maintenance ... 343
7.2 Troubleshooting ... 343
7.3 Alarm Reference ... 347
7.4 WebUI Maintenance Operations ... 347
7.4.1 Software Upgrade ... 347
7.4.2 Security Settings ... 348
7.4.3 System Maintenance ... 350
7.4.3.1 Exporting Full Configuration Files ... 351
7.4.3.2 Importing Full Configuration Files ... 352
7.4.4 Device Log ... 353
7.4.5 Onsite Test ... 353
7.4.6 License Management ... 355
7.4.7 Managing the SmartModule ... 357
7.4.8 Managing Users ... 357
7.4.9 Collecting Performance Data ... 358
7.4.10 Adjusting the Total Energy Yield ... 359
7.4.11 Force Start ... 359
7.4.12 Device Replacement ... 360
7.4.12.1 Device Replacement (V300R023C10) ... 361
7.4.12.2 Device Replacement (V300R024C00 and Later Versions) ... 362
7.4.13 Communication Records ... 363
7.4.14 SOC One-Click Balancing ... 364
7.4.15 Wire Sequence Detection ... 367
7.4.16 Batch Startup/Shutdown ... 368
7.4.17 IEC104 Test ... 368
7.5 Device Replacement ... 369
7.5.1 Exporting Configuration Files from the SmartLogger WebUI ... 370
7.5.2 Exporting Configuration Files from the SUN2000 App ... 370
7.6 Device Disposal ... 372

8 FAQ ... 373
8.1 How Do I Connect the SmartLogger to the SUN2000 App or FusionSolar App? ... 373

8.2 How Do I Set FTP Parameters? 375
8.3 How Do I Set Email Parameters? 378
8.4 How Do I Change the SSID and Password of the Built-in WLAN? 380
8.5 How Do I Use DI Ports? 381
8.6 How Do I Use DO Ports? 382
8.7 How Do I Use the USB Port? 384
8.8 How Do I Change a Device Name? 386
8.9 How Do I Change the Communications Address? 386
8.10 How Do I Export Inverter Parameters? 387
8.11 How Do I Clear Alarms? 388
8.12 How Do I Enable the AI1 Port to Detect SPD Alarms? 388
8.13 Which Models of Power Meters and EMIs Are Supported by the SmartLogger? 389
8.14 How Do I Check the SIM Card Status? 395
8.15 How Do I Use Mobile Network Sharing? 396
8.16 WebUI Allows Login Only in Chinese or Prompts to Switch to Chinese After Login 398
8.17 How Do I Identify the Meter Wiring Direction on the SmartLogger? 399
8.18 Resetting Password 399

9 Technical Specifications 400
9.1 Technical Specifications of the SmartLogger 400
9.2 Technical Specifications of the SmartModule 405

A Product User Lists 407

B Domain Name List of Management Systems 409

C Port Number List 410

D Certificate Management and Maintenance 412
D.1 Initial Certificate Risk Disclaimer 412
D.2 Application Scenarios of Initial Certificates 412

E EMC Information 415

F Contact Information 417

G Digital Power Customer Service 419

H Acronyms and Abbreviations 420

1 Safety Information

Statement

Before transporting, storing, installing, operating, using, and/or maintaining the equipment, read this document, strictly follow the instructions provided herein, and follow all the safety instructions on the equipment and in this document. In this document, "equipment" refers to the products, software, components, spare parts, and/or services related to this document; "the Company" refers to the manufacturer (producer), seller, and/or service provider of the equipment; "you" refers to the entity that transports, stores, installs, operates, uses, and/or maintains the equipment.

The **Danger**, **Warning**, **Caution**, and **Notice** statements described in this document do not cover all the safety precautions. You also need to comply with relevant international, national, or regional standards and industry practices. **The Company shall not be liable for any consequences that may arise due to violations of safety requirements or safety standards concerning the design, production, and usage of the equipment.**

The equipment shall be used in an environment that meets the design specifications. Otherwise, the equipment may be faulty, malfunctioning, or damaged, which is not covered under the warranty. The Company shall not be liable for any property loss, personal injury, or even death caused thereby.

Comply with applicable laws, regulations, standards, and specifications during transportation, storage, installation, operation, use, and maintenance.

Do not perform reverse engineering, decompilation, disassembly, adaptation, implantation, or other derivative operations on the equipment software. Do not study the internal implementation logic of the equipment, obtain the source code of the equipment software, violate intellectual property rights, or disclose any of the performance test results of the equipment software.

The Company shall not be liable for any of the following circumstances or their consequences:

- The equipment is damaged due to force majeure such as earthquakes, floods, volcanic eruptions, debris flows, lightning strikes, fires, wars, armed conflicts, typhoons, hurricanes, tornadoes, and other extreme weather conditions.
- The equipment is operated beyond the conditions specified in this document.

 Copyright © Huawei Technologies Co., Ltd.

- The equipment is installed or used in environments that do not comply with international, national, or regional standards.
- The equipment is installed or used by unqualified personnel.
- You fail to follow the operation instructions and safety precautions on the product and in the document.
- You remove or modify the product or modify the software code without authorization.
- You or a third party authorized by you cause the equipment damage during transportation.
- The equipment is damaged due to storage conditions that do not meet the requirements specified in the product document.
- You fail to prepare materials and tools that comply with local laws, regulations, and related standards.
- The equipment is damaged due to your or a third party's negligence, intentional breach, gross negligence, or improper operations, or other reasons not related to the Company.

1.1 Personal Safety

DANGER

Ensure that power is off during installation. Do not install or remove a cable with power on. Transient contact between the core of the cable and the conductor will generate electric arcs or sparks, which may cause a fire or personal injury.

DANGER

Non-standard and improper operations on the energized equipment may cause fire, electric shocks, or explosion, resulting in property damage, personal injury, or even death.

DANGER

Before operations, remove conductive objects such as watches, bracelets, bangles, rings, and necklaces to prevent electric shocks.

DANGER

During operations, use dedicated insulated tools to prevent electric shocks or short circuits. The dielectric withstanding voltage level must comply with local laws, regulations, standards, and specifications.

 Copyright © Huawei Technologies Co., Ltd.

Figure 1-1 Personal protective equipment

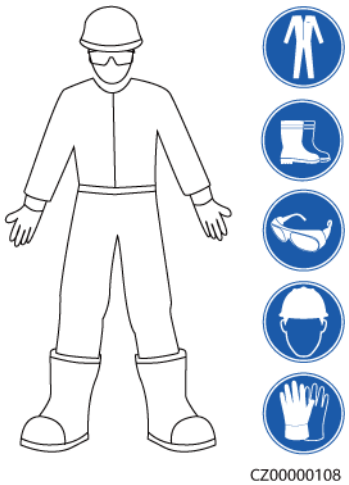

General Requirements

- Do not stop protective devices. Pay attention to the warnings, cautions, and related precautionary measures in this document and on the equipment.
- If there is a likelihood of personal injury or equipment damage during operations, immediately stop, report the case to the supervisor, and take feasible protective measures.
- Do not power on the equipment before it is installed or confirmed by professionals.
- In the case of a fire, immediately leave the building or the equipment area and activate the fire alarm or call emergency services. Do not enter the affected building or equipment area under any circumstances.

Personnel Requirements

- Only professionals and trained personnel are allowed to operate the equipment.
  - Professionals: personnel who are familiar with the working principles and structure of the equipment, trained or experienced in equipment operations and are clear of the sources and degree of various potential hazards in equipment installation, operation, maintenance
  - Trained personnel: personnel who are trained in technology and safety, have required experience, are aware of possible hazards on themselves in certain operations, and are able to take protective measures to minimize the hazards on themselves and other people
- Personnel who plan to install or maintain the equipment must receive adequate training, be able to correctly perform all operations, and understand all necessary safety precautions and local relevant standards.
- Only qualified professionals or trained personnel are allowed to install, operate, and maintain the equipment.
- Only qualified professionals are allowed to remove safety facilities and inspect the equipment.
- Personnel who will perform special tasks such as electrical operations, working at heights, and operations of special equipment must possess the required local qualifications.

 Copyright © Huawei Technologies Co., Ltd.

- Only authorized professionals are allowed to replace the equipment or components (including software).
- Only personnel who need to work on the equipment are allowed to access the equipment.

1.2 Electrical Safety

DANGER

Non-standard and improper operations may result in fire or electric shocks.

DANGER

Prevent foreign matter from entering the equipment during operations. Otherwise, equipment short-circuits or damage, load power derating, power failure, or personal injury may occur.

WARNING

For the equipment that needs to be grounded, install the ground cable first when installing the equipment and remove the ground cable last when removing the equipment.

General Requirements

- Follow the procedures described in the document for installation, operation, and maintenance. Do not reconstruct or alter the equipment, add components, or change the installation sequence without permission.
- Obtain approval from the national or local electric utility company before connecting the equipment to the grid.
- Before installing or removing power cables, turn off the switches of the equipment and its upstream and downstream switches.
- If any liquid is detected inside the equipment, disconnect the power supply immediately and do not use the equipment.
- Before performing operations on the equipment, check that all tools meet the requirements and record the tools. After the operations are complete, collect all of the tools to prevent them from being left inside the equipment.
- Before installing power cables, check that cable labels are correct and cable terminals are insulated.
- When installing the equipment, use a torque tool of a proper measurement range to tighten the screws. When using a wrench to tighten the screws, ensure that the wrench does not tilt and the torque error does not exceed 10% of the specified value.

 Copyright © Huawei Technologies Co., Ltd.

- If the equipment has multiple inputs, disconnect all the inputs and wait until the equipment is completely powered off before performing operations on the equipment.
- Check equipment connections periodically, ensuring that all screws are securely tightened.
- Only qualified professionals can replace a damaged cable.
- Do not scrawl, damage, or block any labels or nameplates on the equipment. Promptly replace labels that have worn out.
- Do not use solvents such as water, alcohol, or oil to clean electrical components inside or outside of the equipment.

Grounding

- Ensure that the grounding impedance of the equipment complies with local electrical standards.
- Ensure that the equipment is connected permanently to the protective ground. Before operating the equipment, check its electrical connection to ensure that it is reliably grounded.
- Do not work on the equipment in the absence of a properly installed ground conductor.
- Do not damage the ground conductor.
- For the equipment that uses a three-pin socket, ensure that the ground terminal in the socket is connected to the protective ground point.
- If high touch current may occur on the equipment, ground the protective ground terminal on the equipment enclosure before connecting the power supply; otherwise, electric shock as a result of touch current may occur.

Cabling Requirements

- When selecting, installing, and routing cables, follow local safety regulations and rules.
- When routing power cables, ensure that there is no coiling or twisting. Do not join or weld power cables. If necessary, use a longer cable.
- Ensure that all cables are properly connected and insulated, and meet specifications.
- Ensure that the slots and holes for routing cables are free from sharp edges, and that the positions where cables are routed through pipes or cable holes are equipped with cushion materials to prevent the cables from being damaged by sharp edges or burrs.
- Ensure that cables of the same type are bound together neatly and straight and that the cable sheath is intact. When routing cables of different types, ensure that they are away from each other without entanglement and overlapping.

 Copyright © Huawei Technologies Co., Ltd.

1.3 Environment Requirements

DANGER

Do not expose the equipment to flammable or explosive gas or smoke. Do not perform any operation on the equipment in such environments.

DANGER

Do not place the equipment near heat sources or fire sources, such as smoke, candles, heaters, or other heating devices. Overheat may damage the equipment or cause a fire.

WARNING

Install the equipment in an area far away from liquids. Do not install it under areas prone to condensation, such as under water pipes and air exhaust vents, or areas prone to water leakage, such as air conditioner vents, ventilation vents, or feeder windows of the equipment room. Ensure that no liquid enters the equipment to prevent faults or short circuits.

General Requirements

- Ensure that the equipment is stored in a clean, dry, and well ventilated area with proper temperature and humidity and is protected from dust and condensation.
- Keep the installation and operating environments of the equipment within the allowed ranges. Otherwise, its performance and safety will be compromised.
- Do not install, use, or operate outdoor equipment and cables (including but not limited to moving equipment, operating equipment and cables, inserting connectors to or removing connectors from signal ports connected to outdoor facilities, working at heights, performing outdoor installation, and opening doors) in harsh weather conditions such as lightning, rain, snow, and level 6 or stronger wind.
- Do not install the equipment in an environment with direct sunlight, dust, smoke, volatile or corrosive gases, infrared and other radiations, organic solvents, or salty air.
- Do not install the equipment in an environment with conductive metal or magnetic dust.
- Do not install the equipment in an area conducive to the growth of microorganisms such as fungus or mildew.
- Do not install the equipment in an area with strong vibration, noise, or electromagnetic interference.

 Copyright © Huawei Technologies Co., Ltd.

- After installing the equipment, remove the packing materials such as cartons, foam, plastics, and cable ties from the equipment area.

1.4 Mechanical Safety

DANGER

When working at heights, wear a safety helmet and safety harness or waist belt and fasten it to a solid structure. Do not mount it on an insecure moveable object or metal object with sharp edges. Make sure that the hooks will not slide off.

WARNING

Ensure that all necessary tools are ready and inspected by a professional organization. Do not use tools that have signs of scratches or fail to pass the inspection or whose inspection validity period has expired. Ensure that the tools are secure and not overloaded.

WARNING

Do not drill holes into the equipment. Doing so may affect the sealing performance and electromagnetic containment of the equipment and damage components or cables inside. Metal shavings from drilling may short-circuit boards inside the equipment.

General Requirements

- Do not perform operations such as arc welding and cutting on the equipment without evaluation by the Company.
- Do not install other devices on the top of the equipment without evaluation by the Company.
- Use correct tools and operate them in the correct way.

Moving Heavy Objects

- Be cautious to prevent injury when moving heavy objects.

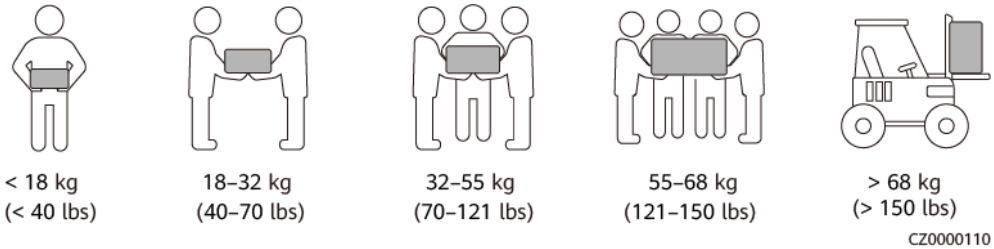

- If multiple persons need to move a heavy object together, determine the manpower and work division with consideration of height and other conditions to ensure that the weight is equally distributed.

 Copyright © Huawei Technologies Co., Ltd.

- If two persons or more move a heavy object together, ensure that the object is lifted and landed simultaneously and moved at a uniform pace under the supervision of one person.
- Wear personal protective gears such as protective gloves and shoes when manually moving the equipment.
- To move an object by hand, approach to the object, squat down, and then lift the object gently and stably by the force of the legs instead of your back. Do not lift it suddenly or turn your body around.
- Move or lift the equipment by holding its handles or lower edges. Do not hold the handles of modules that are installed in the equipment.
- Do not quickly lift a heavy object above your waist. Place the object on a workbench that is half-waist high or any other appropriate place, adjust the positions of your palms, and then lift it.
- Move a heavy object stably with balanced force at an even and low speed. Put down the object stably and slowly to prevent any collision or drop from scratching the surface of the equipment or damaging the components and cables.
- When moving a heavy object, be aware of the workbench, slope, staircase, and slippery places. When moving a heavy object through a door, ensure that the door is wide enough to move the object and avoid bumping or injury.
- When transferring a heavy object, move your feet instead of turning your waist around. When lifting and transferring a heavy object, ensure that your feet point to the target direction of movement.

 Copyright © Huawei Technologies Co., Ltd.

2 Product Overview

2.1 SmartLogger

2.1.1 Model

Model Description

This document covers the following SmartLogger models:

- SmartLogger3000A01CN
- SmartLogger3000B01CN
- SmartLogger3000B03CN
- SmartLogger3000A01EU
- SmartLogger3000A03EU
- SmartLogger3000B02EU
- SmartLogger3000A01NH
- SmartLogger3000B00NH
- SmartLogger3000A01KR
- SmartLogger3000A01AU
- SmartLogger3000A00GL
- SmartLogger3000C01

Figure 2-1 Model

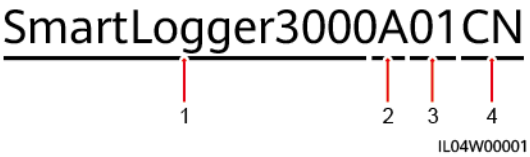

 Copyright © Huawei Technologies Co., Ltd.

Table 2-1 Model description

No.	Meaning	Description
1	Product family	SmartLogger3000: data collector
2	Hardware ID	● A: does not support fiber networking and can connect to a maximum of 80 solar inverters. ● B: supports fiber networking and a maximum of 150 solar inverters. ● C: does not support fiber networking; supports microgrid control based on the SmartLogger.
3	Feature ID	● 00: does not support 4G networking or MBUS communication. ● 01: supports 4G networking, but not MBUS communication. ● 02: supports MBUS communication, but not 4G networking. ● 03: supports 4G networking and MBUS communication.
4	Region	● CN: China ● EU: Europe ● NH: Japan ● KR: South Korea ● AU: Australia ● GL: Global

Model Identification

You can view the SmartLogger model and communication mode on the nameplate.

 Copyright © Huawei Technologies Co., Ltd.

Figure 2-2 Nameplate

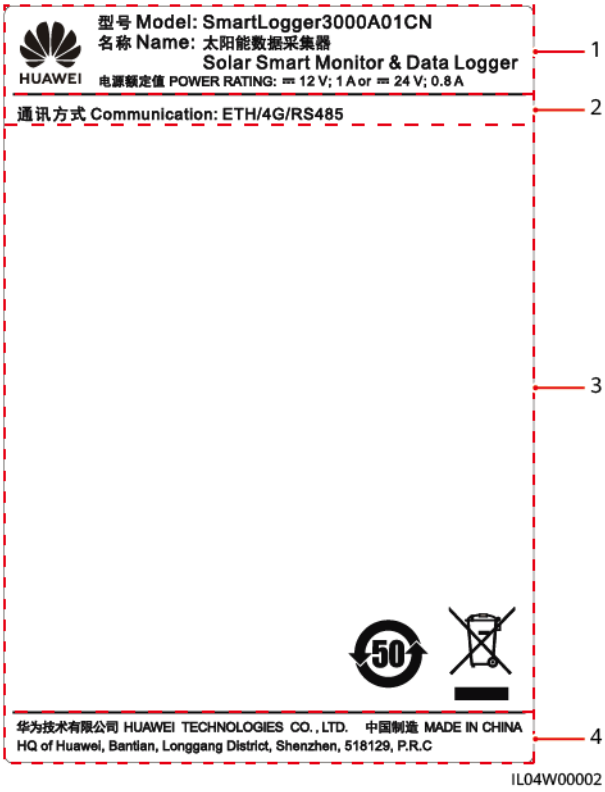

(1) Trademark, product model, and power rating

(2) Communications mode

(3) Compliance symbols

(4) Company name and place of manufacture

NOTE

The nameplate figure is for reference only.

2.1.2 Networking

Functions

The SmartLogger monitors and manages PV systems and energy storage systems (ESSs). It converges all ports, converts protocols, collects and stores data, and centrally monitors and maintains the devices in the systems.

Networking Application

The SmartLogger is applicable to PV systems and ESSs. It supports the following:

- Local operations on the SmartLogger using the mobile app through the built-in WLAN.
- RS485 networking, which enables the SmartLogger to connect to:
  - Devices such as Huawei inverters and PID modules.

 Copyright © Huawei Technologies Co., Ltd.

  - Third-party inverters, environment monitoring instruments (EMIs), Smart Transformer Stations (STSs), and power meters that use the Modbus RTU protocol.
  - Power meters that use the DL/T645 protocol.
- Ethernet networking, which enables the SmartLogger to connect to the inverters, Smart Power Control System (Smart PCS), Smart String Grid Forming ESSs, MBUS CCO, and STSs.
- MBUS networking, which enables the SmartLogger to connect to Huawei inverters and PID-PVBOXs that support MBUS communication.
- Dual-plane redundancy networking to provide reliable transmission.
- Connection to management systems:
  - Connects to a management system or third-party device that uses the Modbus TCP protocol over a wired or wireless network.
  - Connects to a management system or a third-party device that uses the IEC 104 protocol in the LAN over a wired network.
  - Connects to a management system or a third-party device that uses the GOOSE protocol over a wired network.

NOTE

- The SmartLogger cannot be connected to a management system that uses the IEC 104 protocol over a 4G/3G/2G or LTE dedicated network.
- The power meter needs to be connected over a separate RS485 communication line and is not connected to other devices in series.

Typical Networking Scenarios

- The SmartLogger supports the following northbound wired networks: fiber ring network, fiber star network, and Ethernet star network.

 Copyright © Huawei Technologies Co., Ltd.

Figure 2-3 Fiber ring network

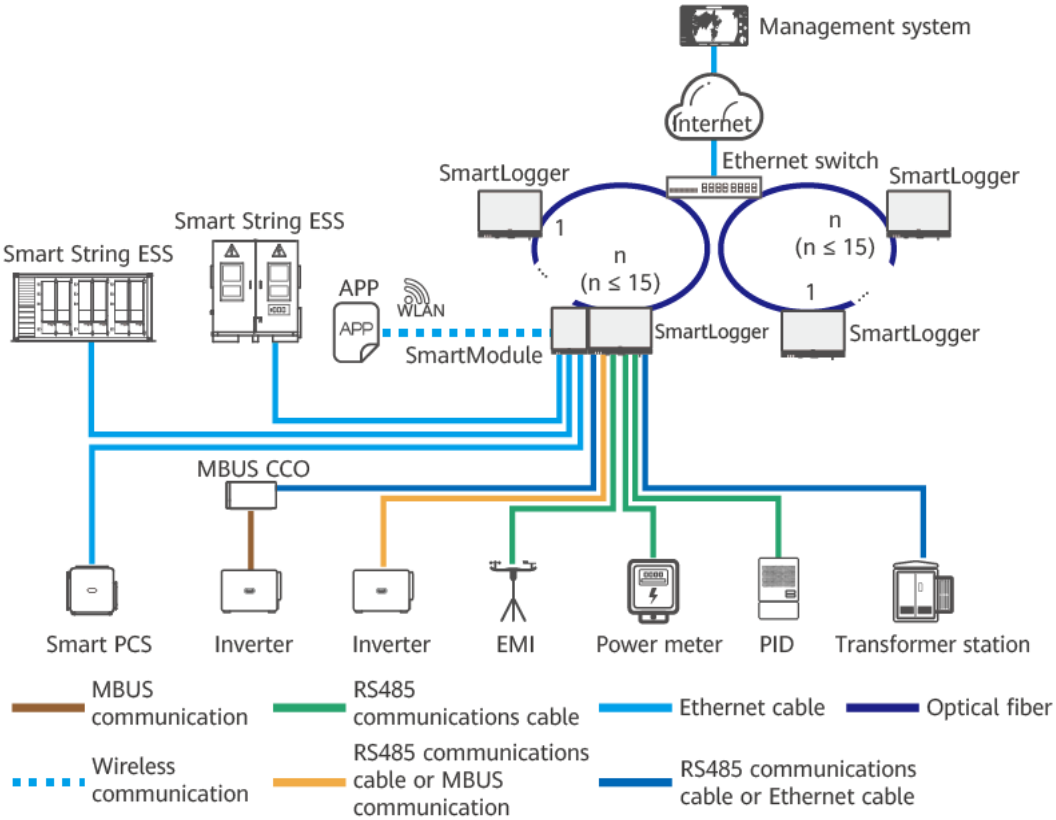

NOTE

- A maximum of 15 SmartLoggers can be connected to form a fiber ring network. Each SmartLogger can connect to devices such as inverters, EMIs, and power meters.
- The fiber channel switch must support and enable the standard RSTP, and the bridge priority of the switch must be higher than 0x8000 of the SmartLogger (recommended value: 0x7000; a smaller value indicates a higher bridge priority). For details about how to configure the RSTP and bridge priority of the switch, contact the vendor. If the switch does not support the RSTP, the fiber ring topology must be changed to a chain or star topology.
- Multiple fiber ring networks can be connected to the management system over Ethernet switches.

 Copyright © Huawei Technologies Co., Ltd.

Figure 2-4 Fiber or Ethernet star network

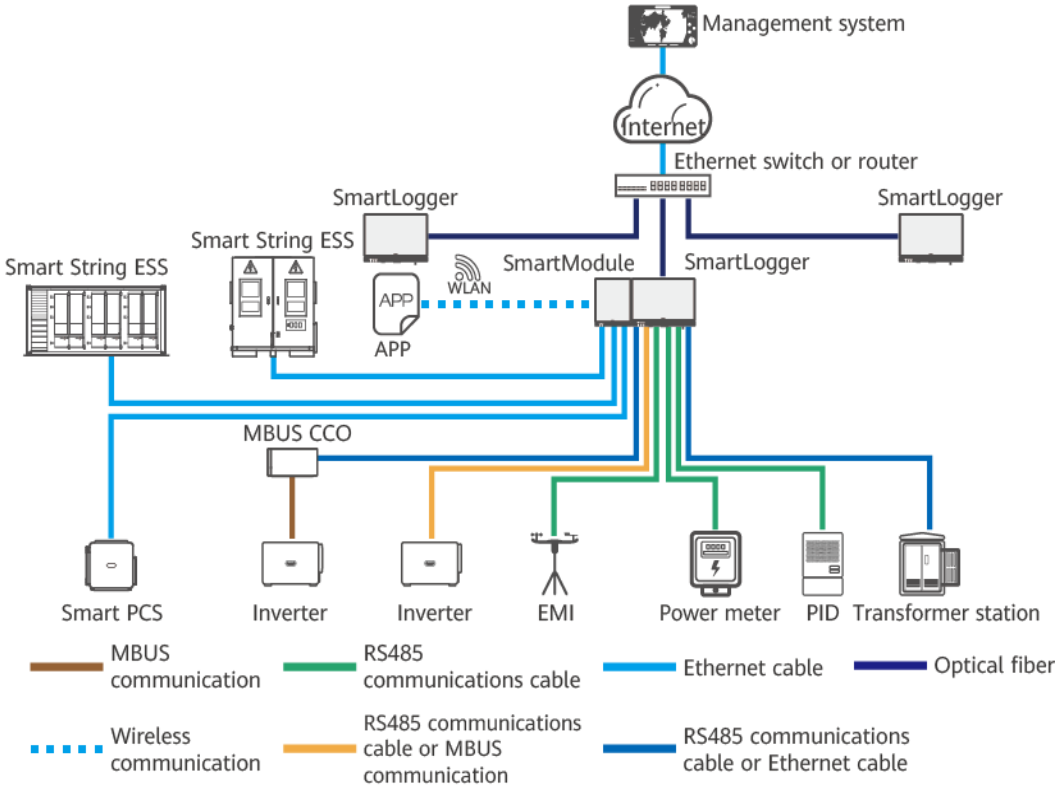

NOTE

- Multiple SmartLoggers can be connected to the management system over Ethernet switches.
- When the SmartLogger connects to an Ethernet switch over optical fibers, the maximum communication distance is 12 km (with the 100M optical module) or 10 km (with the 1000M optical module). The maximum communication distance is 100 m when an Ethernet cable is used for connection.

- The SmartLogger supports the following wireless networks: 4G/3G/2G networking and LTE dedicated networking.

 Copyright © Huawei Technologies Co., Ltd.

Figure 2-5 4G networking

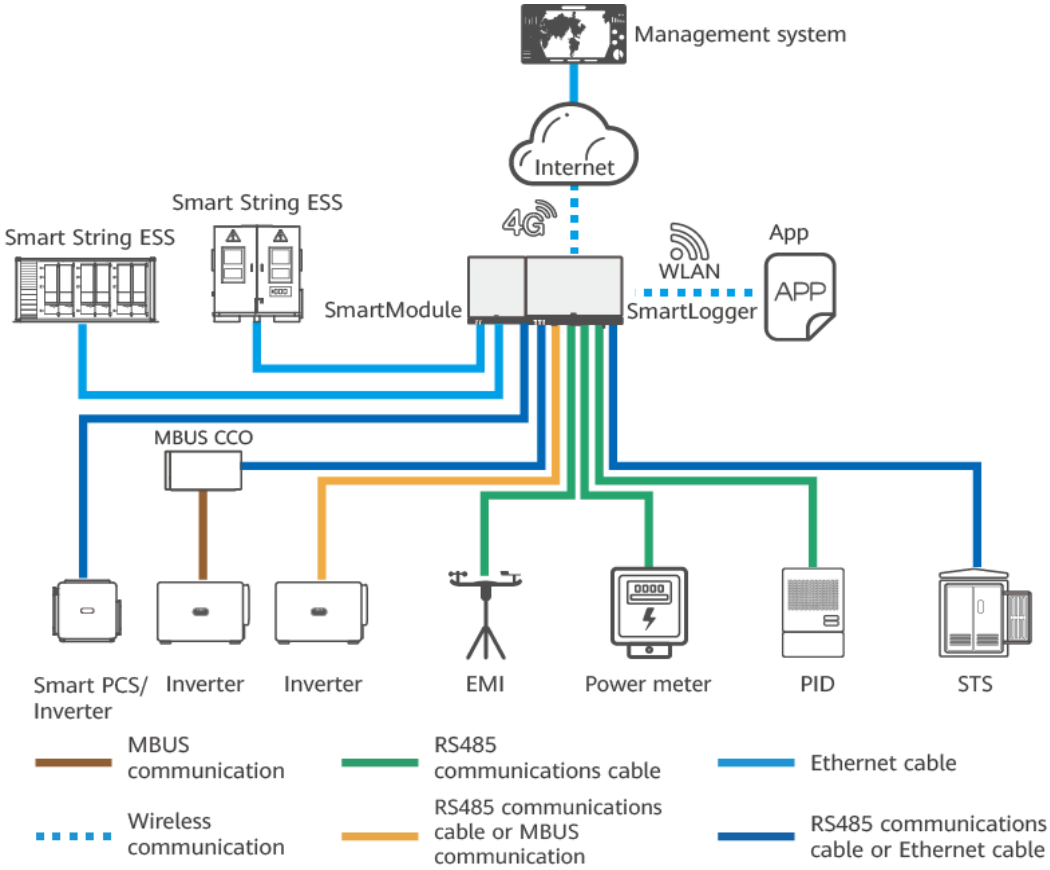

Copyright © Huawei Technologies Co., Ltd.

Figure 2-6 LTE dedicated networking

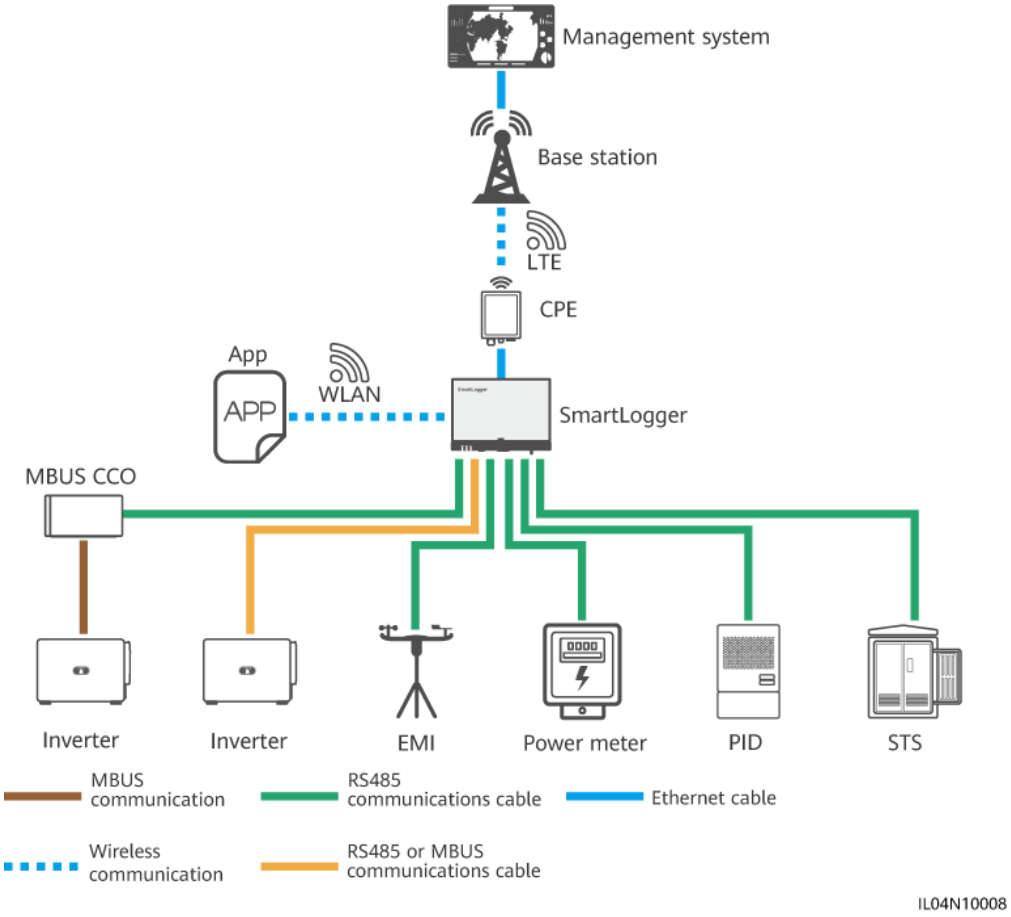

NOTE

- The WAN port of the SmartLogger connects to the customer-premises equipment (CPE) through the power over Ethernet (PoE) module and PoE surge protective device (SPD).
- The IP addresses of the SmartLogger and CPE must be on the same network segment.

 Copyright © Huawei Technologies Co., Ltd.

2.1.3 Appearance

Appearance

Figure 2-7 SmartLogger

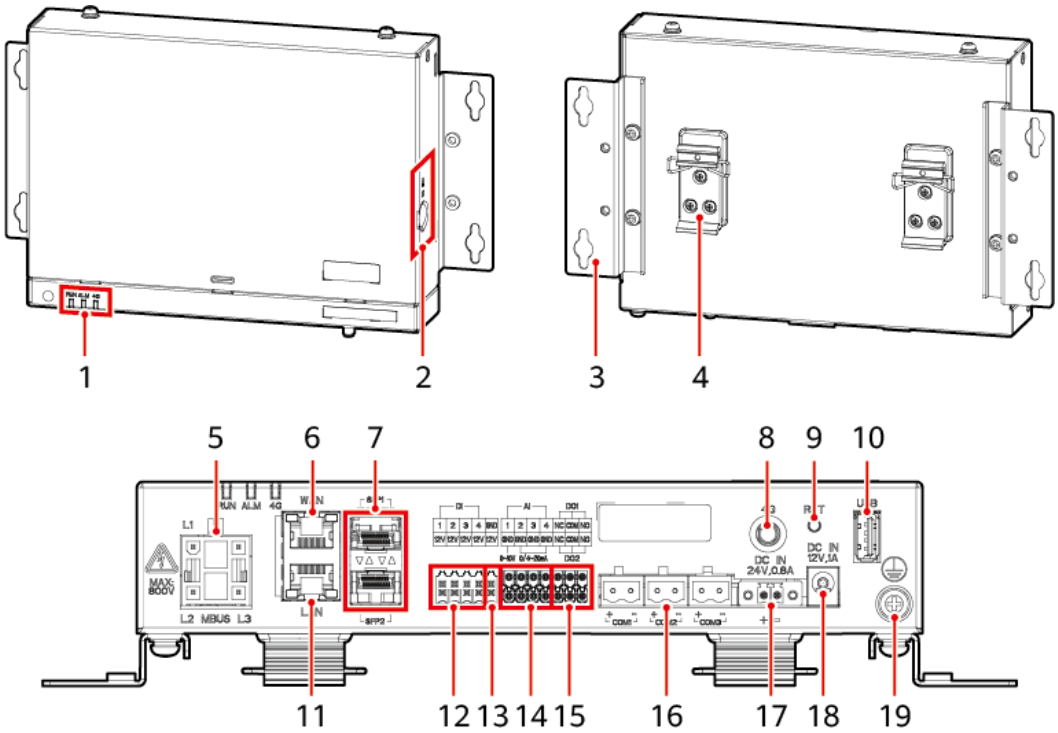

(1) LED indicators	(2) SIM card slot	(3) Mounting ear
(4) Guide rail clamp	(5) MBUS port	(6) GE port (WAN)
(7) SFP ports	(8) 4G antenna port	(9) RST button
(10) USB port	(11) GE port (LAN)	(12) DI ports
(13) 12 V output power port	(14) AI ports	(15) DO ports
(16) COM ports	(17) 24 V input power port	(18) 12 V input power port
(19) Protective ground point	-	-

 Copyright © Huawei Technologies Co., Ltd.

Indicators

Table 2-2 Indicators

Indicator	Status		Description
Running indicator (RUN) RUN	Green off		The SmartLogger is not powered on.
	Blinking green slowly (on for 1s and then off for 1s)		The communication with the management system is normal.
	Blinking green fast (on for 0.125s and then off for 0.125s)		The communication with the management system is interrupted.
Alarm/ Maintenance indicator (ALM) ALM	Alarm status	Red off	No system alarm is raised.
		Blinking red slowly (on for 1s and then off for 4s)	The system raises a warning alarm.
		Blinking red fast (on for 0.5s and then off for 0.5s)	The system raises a minor alarm.
		Steady red	The system raises a major alarm.
	Maintenance status	Green off	No local maintenance is in progress.
		Blinking green slowly (on for 1s and then off for 1s)	Local maintenance is in progress.
		Blinking green fast (on for 0.125s and then off for 0.125s)	Local maintenance fails or the connection to the app is to be set up.
		Steady green	Local maintenance succeeds.
4G indicator (4G) 4G	Green off		The 4G/3G/2G networking function is not enabled.
	Blinking green slowly (on for 1s and then off for 1s)		Dial-up through the 4G/3G/2G network is successful.
	Blinking green fast (on for 0.125s and then off for 0.125s)		The 4G/3G/2G network is not connected or the communication is interrupted.

Copyright © Huawei Technologies Co., Ltd.

NOTE

- Local maintenance refers to the operations performed by connecting a USB flash drive to the SmartLogger USB port, such as full data import and export using a USB flash drive, and by connecting the SmartLogger to the FusionSolar app or SUN2000 app over the built-in WLAN hotspot.
- If an alarm and local maintenance happen concurrently, the alarm/maintenance indicator shows the local maintenance state first. After local maintenance ends, the indicator shows the alarm state.

Communications Ports

- GE ports: Ethernet ports, including one WAN port and one LAN port

Appearance	GE Port		Description
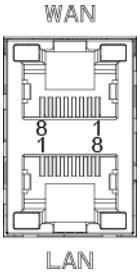	Pins	PIN1	1+
		PIN2	1–
		PIN3	2+
		PIN4	3+
		PIN5	3–
		PIN6	2–
		PIN7	4+
		PIN8	4–
	Indicators	Green indicator	If the indicator is steady green, the line is normal.
		Yellow indicator	If the indicator blinks yellow, data communication is normal.

- SFP ports: include two Ethernet optical ports (SFP1 and SFP2), support access of 100M/1000M SFP or eSFP optical modules, and implement ring networking using RSTP or STP.

NOTE

- If RSTP is used, fiber ring protection can be completed within 10 seconds. If STP is used, fiber ring protection can be completed within 60 seconds.
- The SFP1 and SFP2 ports are Ethernet optical ports and work on the same network segment as the WAN port.

 Copyright © Huawei Technologies Co., Ltd.

Appearance	SFP Port		Description
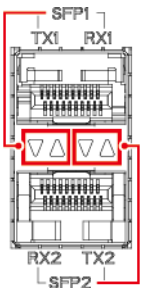	SFP1	TX1	Transmit port
		RX1	Receive port
	SFP2	RX2	Receive port
		TX2	Transmit port
	Indicators	Green indicator	If the indicator is steady green, the line is normal.
		Yellow indicator	If the indicator blinks yellow, data communication is normal.

- DI ports: digital input ports, which are used to connect to DI power grid scheduling commands or alarm signals.

Appearance	DI Port		Description
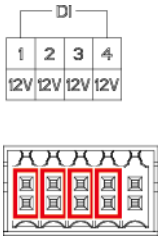	DI1	1	Can connect to four passive dry contact signals.
		12V	
	DI2	2	
		12V	
	DI3	3	
		12V	
	DI4	4	
		12V	

- AI ports: analog input ports, which are used to connect to AI power grid scheduling commands or environment monitoring sensors.

 Copyright © Huawei Technologies Co., Ltd.

Appearance	AI Port		Description
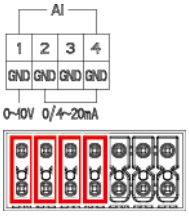	AI1	1	Supports one channel of voltage-type (0–10 V) AI signals.
		GND	
	AI2	2	Support three channels of current-type (0–20 mA or 4–20 mA) AI signals.
		GND	
	AI3	3	
		GND	
	AI4	4	
		GND	

- DO ports: digital output ports, supporting two relay outputs. A DO port supports a maximum of 12 V signal voltage.

Appearance	DO Port		Description
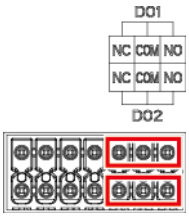	DO1	NC	• The NC/COM is a normally closed contact. • The NO/COM is a normally open contact.
		COM	
		NO	
	DO2	NC	
		COM	
		NO	

- USB port: supports USB2.0 for connecting to a USB flash drive.

Appearance	USB Port	Description
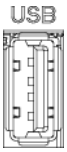	USB	After a USB flash drive is inserted into the USB port, you can perform local maintenance operations on the SmartLogger, such as software upgrade and data export.

- COM ports: RS485 communications port, supporting three independent RS485 channels and the access of devices that comply with the Modbus RTU or DL/T645 protocol.

 Copyright © Huawei Technologies Co., Ltd.

Appearance	COM Port		Description
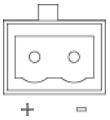	COM1, COM2, and COM3	+	RS485A, RS485 differential signal+
		–	RS485B, RS485 differential signal–

Power Ports

- Input power ports: There are two input power ports.

Appearance	Input Power Port		Description
	12 V input power port	DC IN 12 V, 1 A	DC2.0 input port, which supports 12 V DC input and is used to connect to a power adapter.
	24 V input power port	DC IN 24 V, 0.8 A	2-pin cord end terminal, which supports 24 V DC input. When the device connects to the power supply through the 12 V input power port, this port can be used as the 12 V output power port.

- 12 V output power port: There is one 12 V output power port. Its maximum output capability is 0.1 A. The port is used to drive the coil of the intermediate relay in the export limitation or audible and visual alarm scenario.

NOTICE

Select the intermediate relay with a free-wheeling diode in the coil. Otherwise, the device may be damaged.

Appearance	Output Power Port		Description
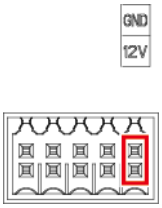	12 V output power port	GND	Power supply–
		12V	Power supply+

Copyright © Huawei Technologies Co., Ltd.

Button

Button	Operation	Function Description
RST button RST	Hold down the button for 1s to 3s.	When **WLAN** is set to **OFF in idle state**, hold down the RST button for 1s to 3s to power on the WLAN module. The alarm/maintenance indicator (ALM) then blinks green quickly for 2 minutes (other indicators are off) and the SmartLogger waits for connecting to the app. If the app is not connected, the WLAN module is automatically powered off after it is powered on for 4 hours.
	Hold down the button for 10s to 20s.	If you hold down the RST button for 10s to 20s, the SmartLogger enters the safe mode. In this case, the device configuration parameters are retained, but personal privacy and sensitive data, including the login password and email address, are cleared.
	Hold down the button for more than 60s.	Within 3 minutes after the SmartLogger is powered on, wait until the RUN indicator blinks slowly and hold down the RST button for more than 60s. When the RUN indicator is on again, the SmartLogger restarts and restores its factory settings.

Dimensions

Figure 2-8 Dimensions

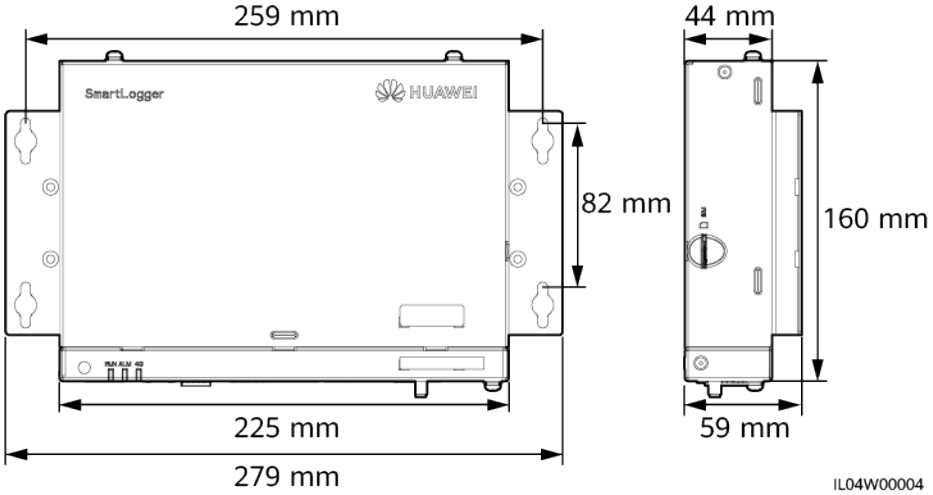

2.2 SmartModule

Copyright © Huawei Technologies Co., Ltd.

2.2.1 Model

Model Description

This document covers the following SmartModule model: SmartModule1000A01

Figure 2-9 Model

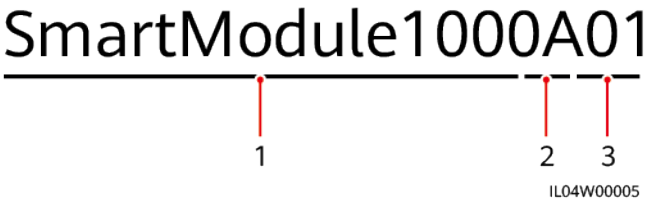

Table 2-3 Model description

No.	Meaning	Description
1	Product family	SmartModule1000: expansion module
2	Hardware ID	A: version A
3	Feature ID	01: SmartLogger scenario

Model Identification

You can view the SmartModule model on the nameplate.

Figure 2-10 Nameplate

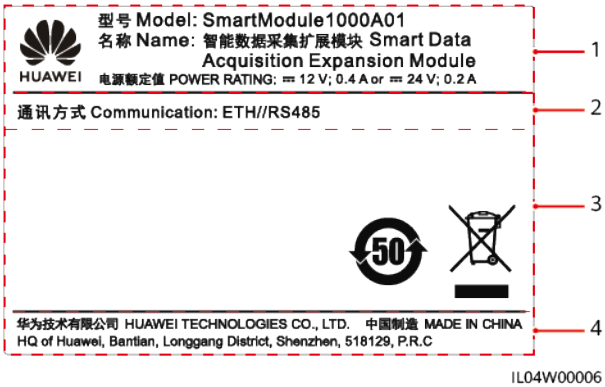

(1) Trademark, product model, and power rating

(2) Communications mode

(3) Compliance symbols

(4) Company name and place of manufacture

NOTE

The nameplate figure is for reference only.

Copyright © Huawei Technologies Co., Ltd.

2.2.2 Networking

Functions

The SmartModule monitors and manages PV systems and ESSs. It converges ports, converts protocols, and collects data for devices in the systems, and extends ports for the SmartLogger.

Networking

The SmartModule is applicable to PV systems and ESSs. It supports the following:

- RS485 networking, which enables the SmartModule to connect to:
  - Devices such as Huawei inverters and PID modules.
  - Third-party solar inverters, EMIs, STSs, and power meters that use the Modbus RTU protocol.
  - Power meters that use the DL/T645 protocol.
- Ethernet networking, which connects to the solar inverter, Smart PCS, Smart String Grid Forming ESS, and STS.
- The SmartLogger can be connected over Ethernet.

Figure 2-11 Networking

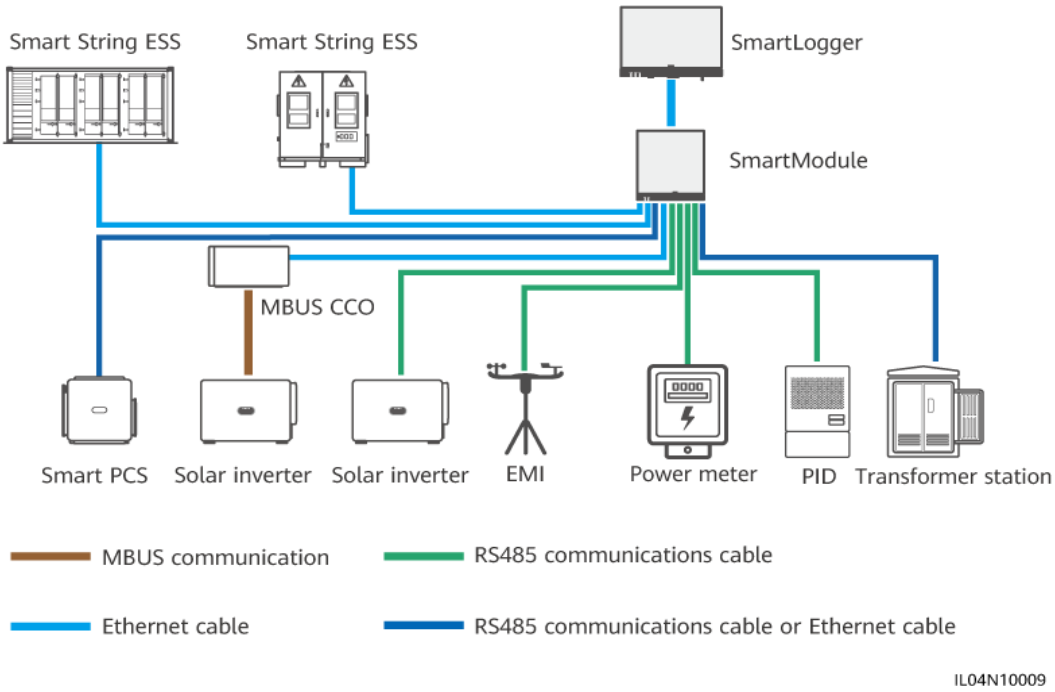

Copyright © Huawei Technologies Co., Ltd.

2.2.3 Appearance

Appearance

Figure 2-12 Appearance

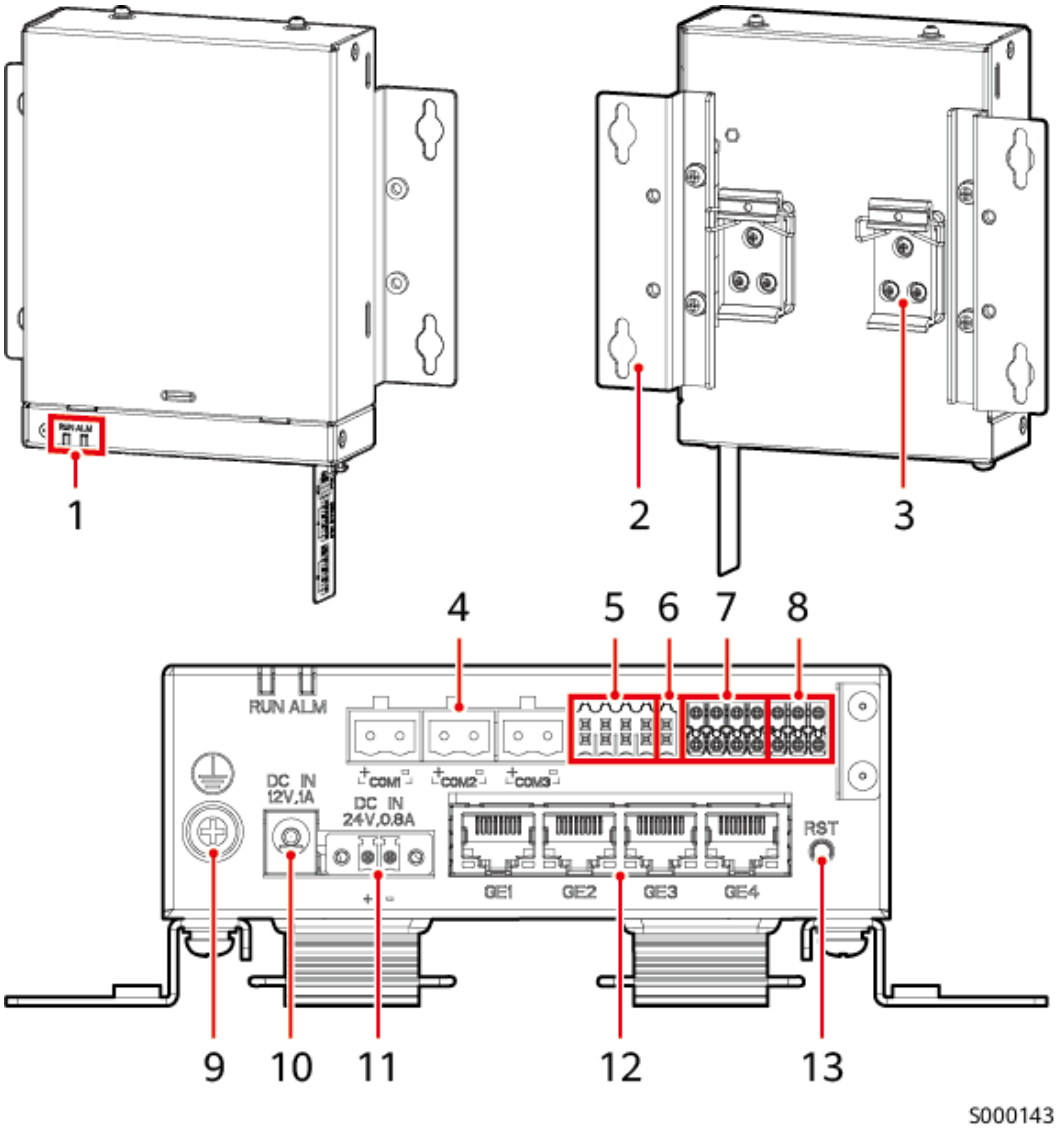

(1) LED indicators	(2) Mounting ear	(3) Guide rail clamp
(4) COM ports	(5) DI ports	(6) 12 V output power port
(7) AI ports	(8) PT ports	(9) Protective ground point
(10) 12 V input power port	(11) 24 V input power port	(12) GE ports
(13) RST button	-	-

Copyright © Huawei Technologies Co., Ltd.

Indicators

Indicator	Status		Description
Running indicator (RUN) RUN	Green off		The SmartModule is not powered on.
	Blinking green slowly (on for 1s and then off for 1s)		The communication with the SmartLogger is normal.
	Blinking green fast (on for 0.125s and then off for 0.125s)		The communication with the SmartLogger is interrupted.
Alarm/ Maintenance indicator (ALM) ALM	Alarm status	Red off	No alarm is raised for the SmartModule.
		Blinking red slowly (on for 1s and then off for 4s)	The SmartModule is running in non-encryption status.
		Blinking red fast (on for 0.5s and then off for 0.5s)	The SmartModule digital certificate is invalid.
		Steady red	Reserved.

Communications Ports

- GE ports: four Ethernet electrical ports. Connect the LAN port of the SmartLogger to one GE port of the SmartModule using an Ethernet cable. The SmartModule obtains an IP address from the DHCP server and automatically registers with the SmartLogger.

 Copyright © Huawei Technologies Co., Ltd.

Appearance	GE Port		Description
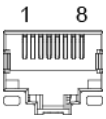	Pins	PIN1	1+
		PIN2	1–
		PIN3	2+
		PIN4	3+
		PIN5	3–
		PIN6	2–
		PIN7	4+
		PIN8	4–
	Indicators	Green indicator	If the indicator is steady green, the line is normal.
		Yellow indicator	If the indicator blinks yellow, data communication is normal.

- DI ports: digital input ports, which are used to connect to DI power grid scheduling commands or alarm signals.

Appearance	DI Port		Description
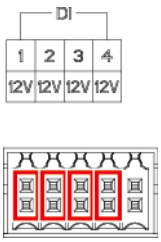	DI1	1	Can connect to four passive dry contact signals.
		12V	
	DI2	2	
		12V	
	DI3	3	
		12V	
	DI4	4	
		12V	

- AI ports: analog input ports, which are used to connect to AI power grid scheduling commands or environment monitoring sensors.

 Copyright © Huawei Technologies Co., Ltd.

Appearance	AI Port		Description
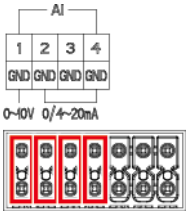	AI1	1	Supports one channel of voltage-type (0–10 V) AI signals.
		GND	
	AI2	2	Support three channels of current-type (0–20 mA or 4–20 mA) AI signals.
		GND	
	AI3	3	
		GND	
	AI4	4	
		GND	

- PT ports: can connect to two PT100/PT1000 temperature sensors.

Appearance	PT Port		Description
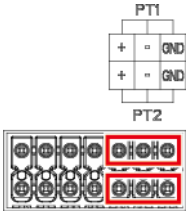	PT1	+	Can connect to a three-wire or two-wire PT100/PT1000 temperature sensor. • Three-wire: cable length < 2 m for PT100; cable length < 20 m for PT1000 • Two-wire: cable length < 2 m for a PT temperature sensor
		–	
		GND	
	PT2	+	
		–	
		GND	

- COM ports: RS485 communications port, supporting three independent RS485 channels and the access of devices that comply with the Modbus RTU or DL/T645 protocol.

Appearance	COM Port		Description
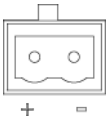	COM1, COM2, and COM3	+	RS485A, RS485 differential signal+
		–	RS485B, RS485 differential signal–

Power Ports

- Input power ports: There are two input power ports.

 Copyright © Huawei Technologies Co., Ltd.

Appearance	Input Power Port		Description
	12 V input power port	DC IN 12 V, 1 A	DC2.0 input port, which supports 12 V DC input and is used to connect to a power adapter.
	24 V input power port	DC IN 24 V, 0.8 A	2-pin cord end terminal, which supports 24 V DC input. When the device connects to the power supply through the 12 V input power port, this port can be used as the 12 V output power port.

- 12 V output power port: There is one 12 V output power port. Its maximum output capability is 0.1 A. The port is used to drive the coil of the intermediate relay in the export limitation or audible and visual alarm scenario.

NOTICE

Select the intermediate relay with a free-wheeling diode in the coil. Otherwise, the device may be damaged.

Appearance	Output Power Port		Description
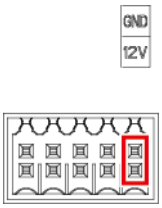	12 V output power port	GND	Power supply–
		12V	Power supply+

 Copyright © Huawei Technologies Co., Ltd.

Button

Button	Operation	Function Description
RST button RST	Hold down the button for 3s to 10s.	If the **Communication using expired certificate** function is disabled for the SmartLogger and the digital certificate of the SmartModule becomes invalid, after enabling the function, press the RST button for 3s to 10s to enable the SmartModule to enter the mode of ignoring digital certificate expiration and restore the communication with the SmartLogger. The alarm/maintenance indicator (ALM) blinks red slowly. After the digital certificate of the SmartModule is reloaded through the SmartLogger, the SmartModule communication can recover.
	Hold down the button for more than 60s.	Within 3 minutes after the SmartModule is powered on, hold down the RST button for more than 60s until all indicators are off and then wait until the RUN indicator is on. The SmartModule restarts and restores its factory settings.

Dimensions

Figure 2-13 Dimensions

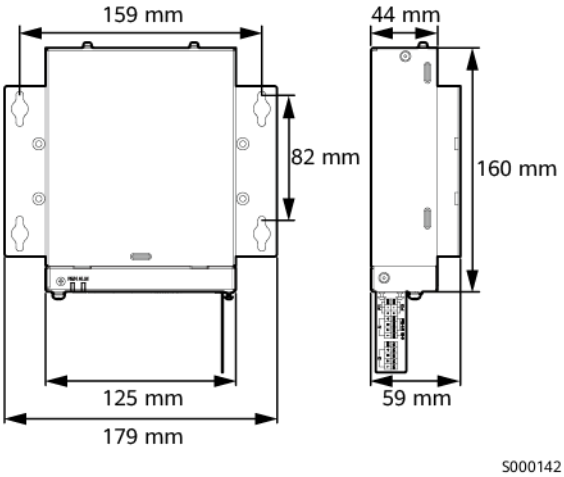

Copyright © Huawei Technologies Co., Ltd.

3 Device Installation

3.1 Checking Before Installation

Check Item	Criteria
Outer packaging	The outer package is intact. If it is damaged or abnormal, do not unpack it and contact your dealer.
Deliverables	Check the quantity of deliverables against the *Packing List* in the packing case. If any component is missing or damaged, contact your dealer.

3.2 Tools

Type	Tool			
Installation	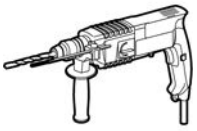 Hammer drill	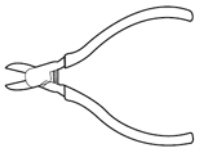 Diagonal pliers	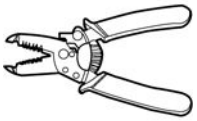 Wire stripper	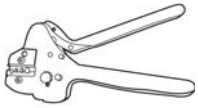 Crimping tool
	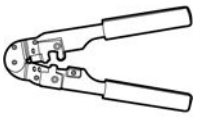 RJ45 crimping tool	Flat-head screwdriver	Phillips insulated torque screwdriver	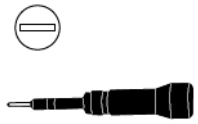 Flat-head insulated torque screwdriver

 Copyright © Huawei Technologies Co., Ltd.

Type	Tool			
	Utility knife	Cable cutter	Vacuum cleaner	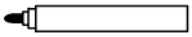 Marker
	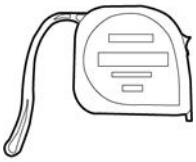 Measuring tape	Cable tie	Heat gun	Multimeter
	Heat shrink tubing	Level	Rubber mallet	-
PPE	Insulated gloves	Safety goggles	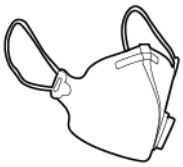 Dust mask	Insulated shoes

3.3 Installation Requirements

NOTICE

- Do not install the SmartLogger in areas with flammable and explosive materials and direct sunlight.
- The SmartLogger should be installed at a proper height to facilitate operation and maintenance.

 Copyright © Huawei Technologies Co., Ltd.

Figure 3-1 Installation position

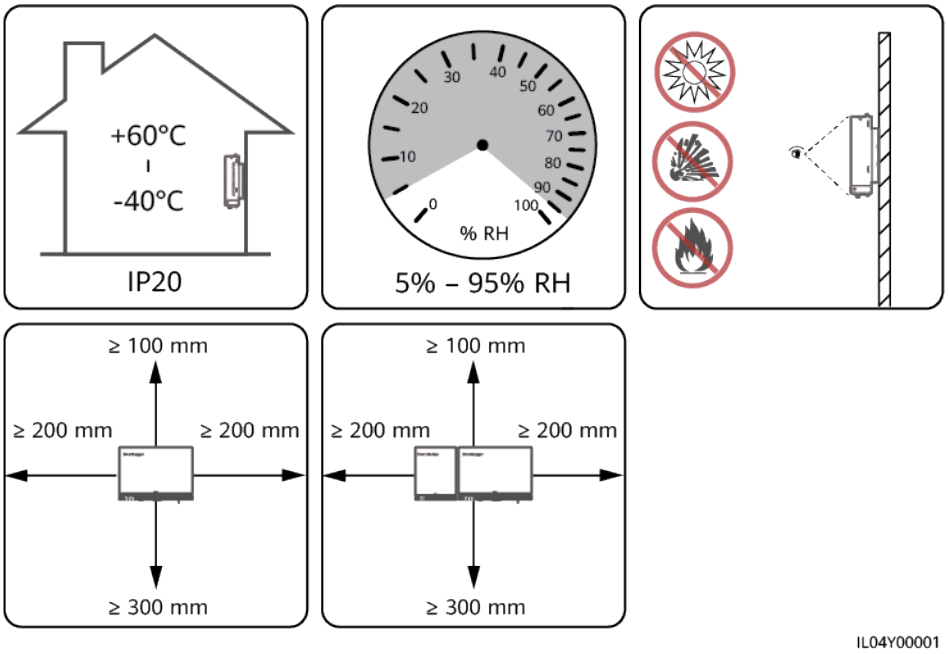

3.4 Installing the SmartLogger

The SmartLogger can be wall-mounted or guide rail-mounted.

Wall-mounted Installation

WARNING

- Avoid drilling holes into the water pipes and power cables buried in the wall.
- Install a SmartLogger on a flat and secure interior wall.
- When wall-mounting the SmartLogger, ensure that the cable connection area faces downwards for ease of cable connection and maintenance.
- You are advised to use the tapping screws and expansion tubes delivered with the SmartLogger.

 Copyright © Huawei Technologies Co., Ltd.

Figure 3-2 Wall-mounted installation

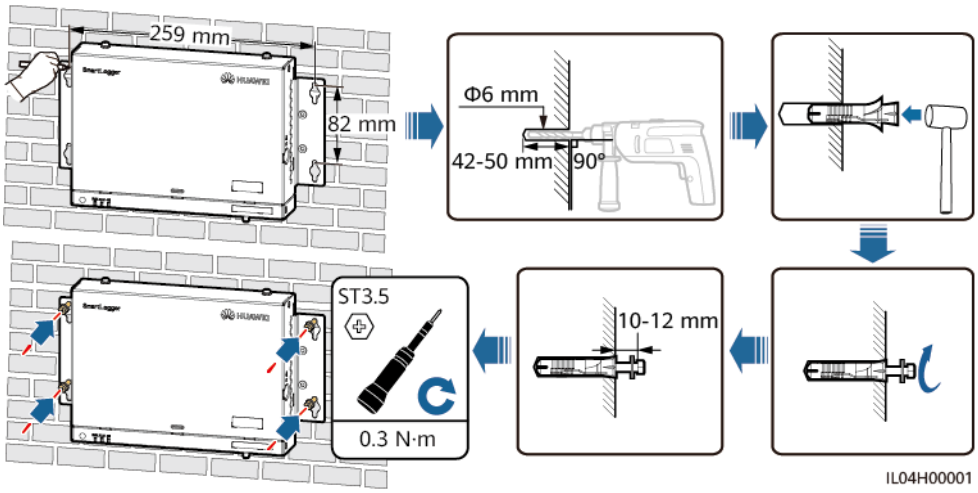

Guide Rail-mounted Installation

Prepare a 35 mm standard guide rail by yourself. Ensure that the guide rail:

- Has sufficient length for securing the SmartLogger. The recommended effective length is 230 mm or greater.
- Has been secured before you install the SmartLogger.

Figure 3-3 Guide rail-mounted installation

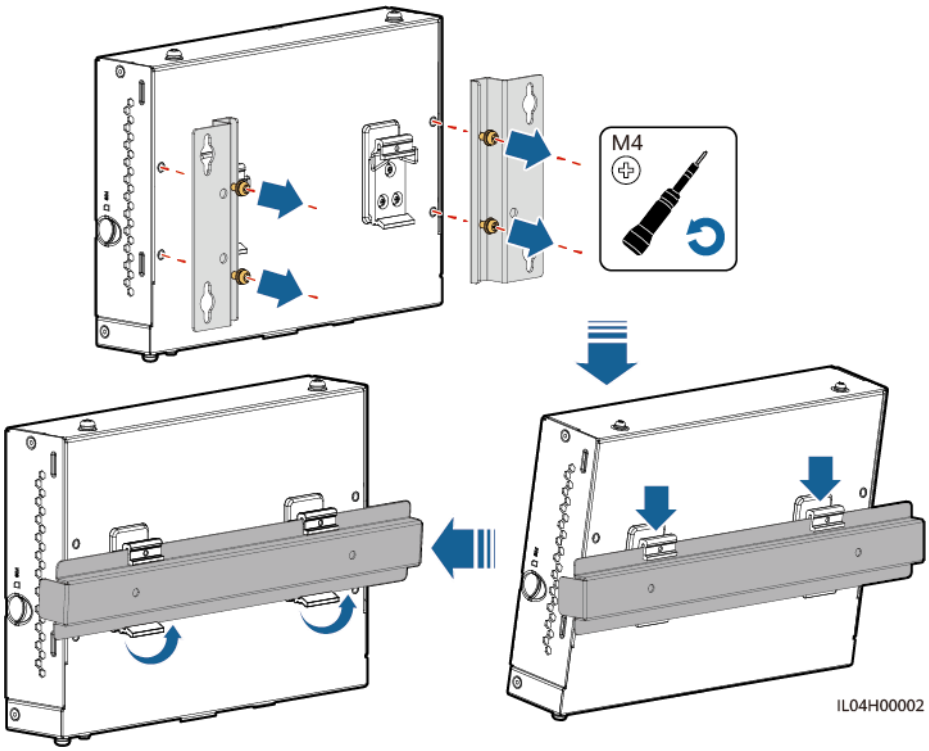

Copyright © Huawei Technologies Co., Ltd.

3.5 Installing the SmartLogger and SmartModule

Combine the SmartLogger and SmartModule and install them on a wall or along a guide rail.

Wall-mounted Installation

WARNING

Avoid drilling holes into the water pipes and power cables buried in the wall.

Step 1 Combine the SmartLogger and SmartModule.

NOTE

If the SmartLogger and SmartModule have been combined before delivery, skip this step.

Figure 3-4 Connecting the SmartLogger to the SmartModule using a connecting plate

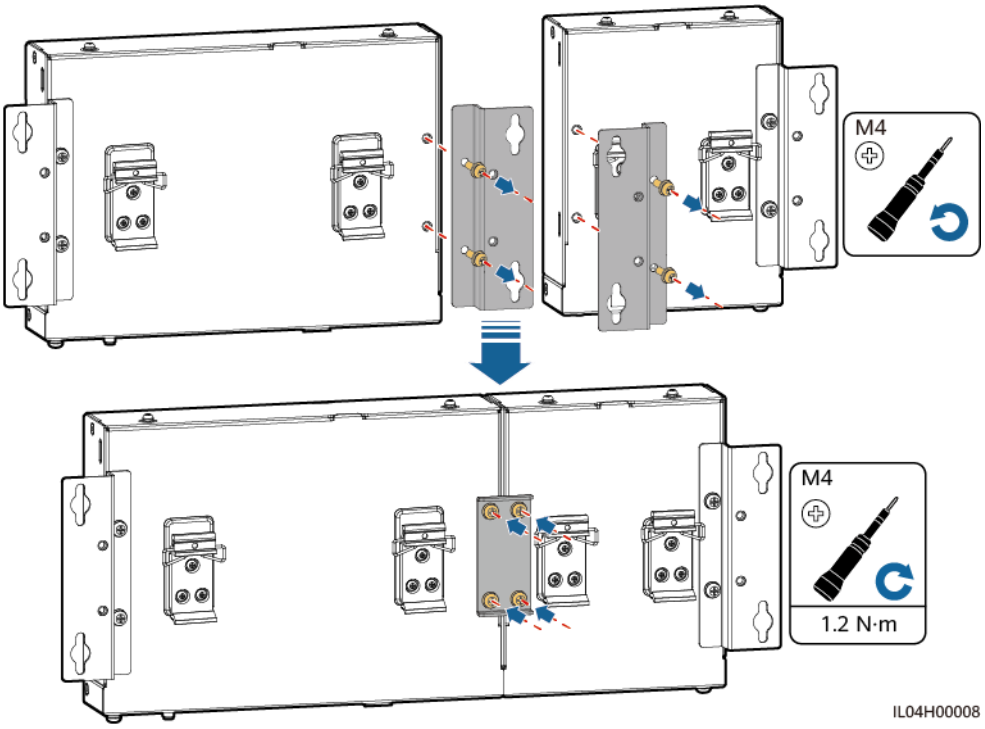

Step 2 Install the SmartLogger and SmartModule.

Copyright © Huawei Technologies Co., Ltd.

Figure 3-5 Wall-mounted installation

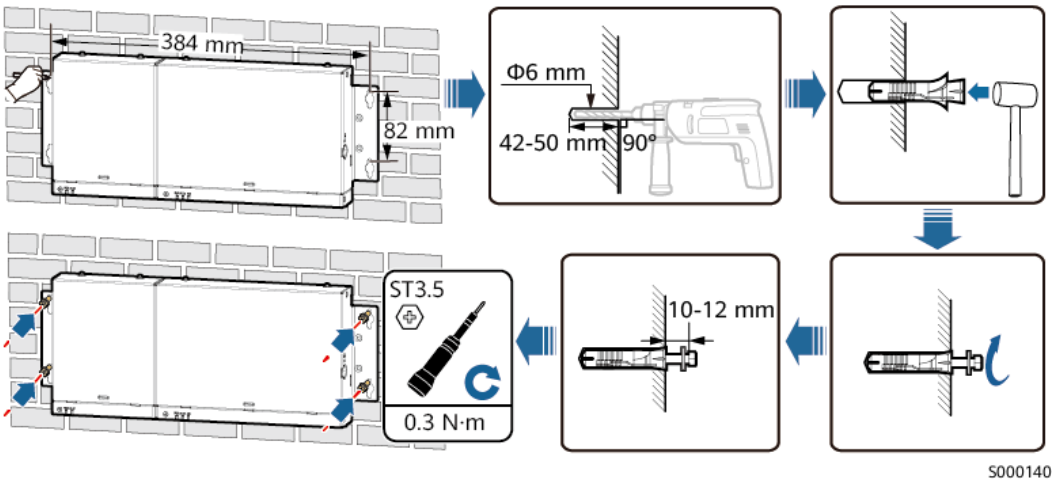

----End

Guide Rail-mounted Installation (Stand-alone)

Prepare a 35 mm standard guide rail by yourself. Ensure that the guide rail:

- Has sufficient length for securing the SmartLogger and SmartModule. The recommended effective length is 360 mm or greater.
- Has been secured before you install the SmartLogger and SmartModule.

NOTE

Ensure that the SIM card slot on the SmartLogger is not blocked.

Figure 3-6 Guide rail-mounted installation

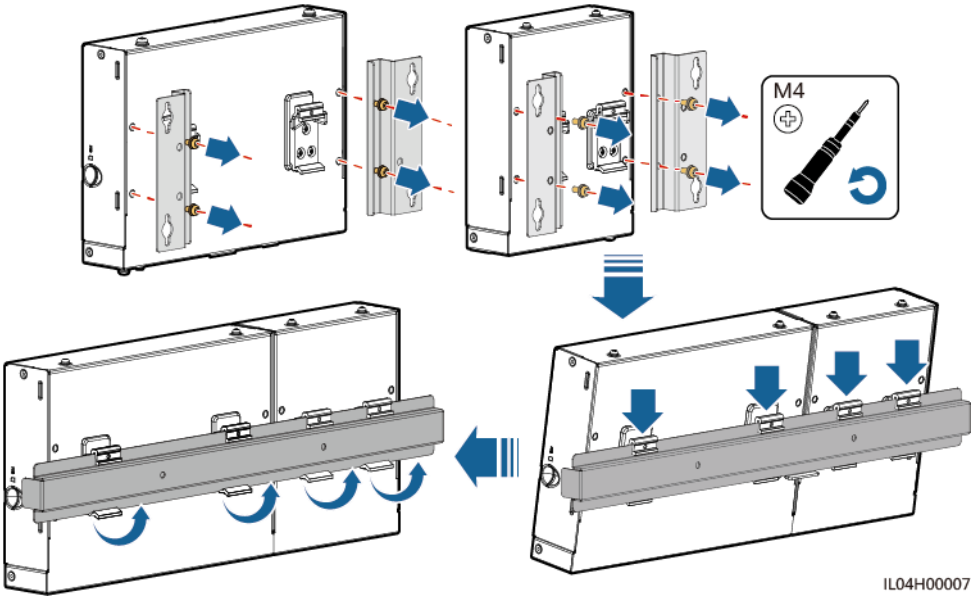

Guide Rail-mounted Installation (Combined)

Prepare a 35 mm standard guide rail by yourself. Ensure that the guide rail:

Copyright © Huawei Technologies Co., Ltd.

- Has sufficient length for securing the SmartLogger and SmartModule. The recommended effective length is 360 mm or greater.
- Has been secured before you install the SmartLogger and SmartModule.

NOTE

Ensure that the SIM card slot on the SmartLogger is not blocked.

Step 1 Combine the SmartLogger and SmartModule.

NOTE

If the SmartLogger and SmartModule have been combined before delivery, you only need to remove the mounting ears and guide rail clamps in the middle. You do not need to use a connecting plate to connect the SmartLogger and SmartModule.

Figure 3-7 Connecting the SmartLogger to the SmartModule using a connecting plate

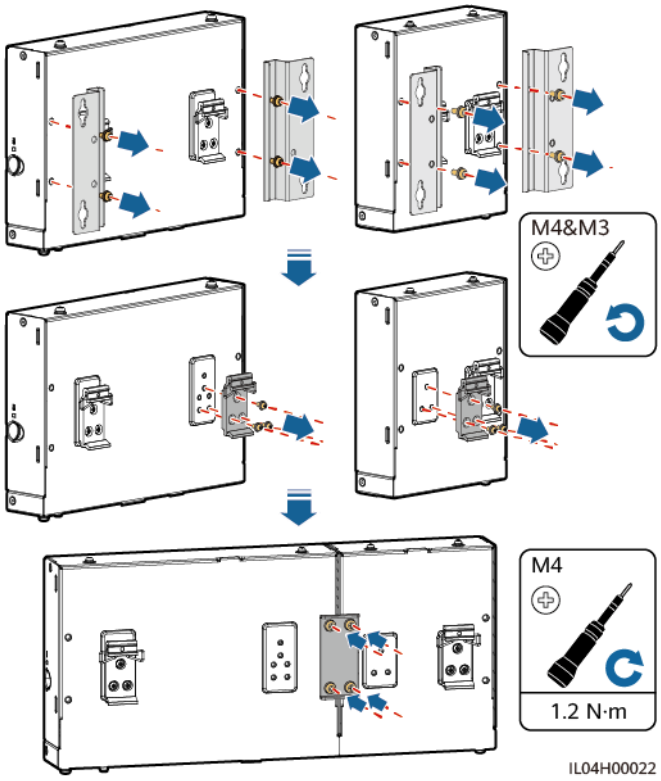

Step 2 Install the SmartLogger and SmartModule.

Copyright © Huawei Technologies Co., Ltd.

Figure 3-8 Guide rail-mounted installation

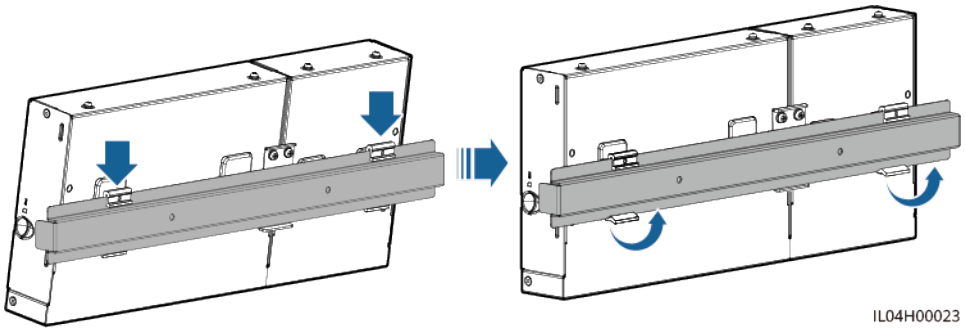

----End

3.6 Installing a Power Adapter

A power adapter can be installed on a wall or flat surface.

If the SmartLogger requires a power adapter for power supply, install a power adapter.

Wall-mounted Installation

It is recommended that the power adapter be installed on the right side of the SmartLogger. Keep the AC power cable port upward.

WARNING

Avoid drilling holes into the water pipes and power cables buried in the wall.

Figure 3-9 Wall-mounted installation (mode 1)

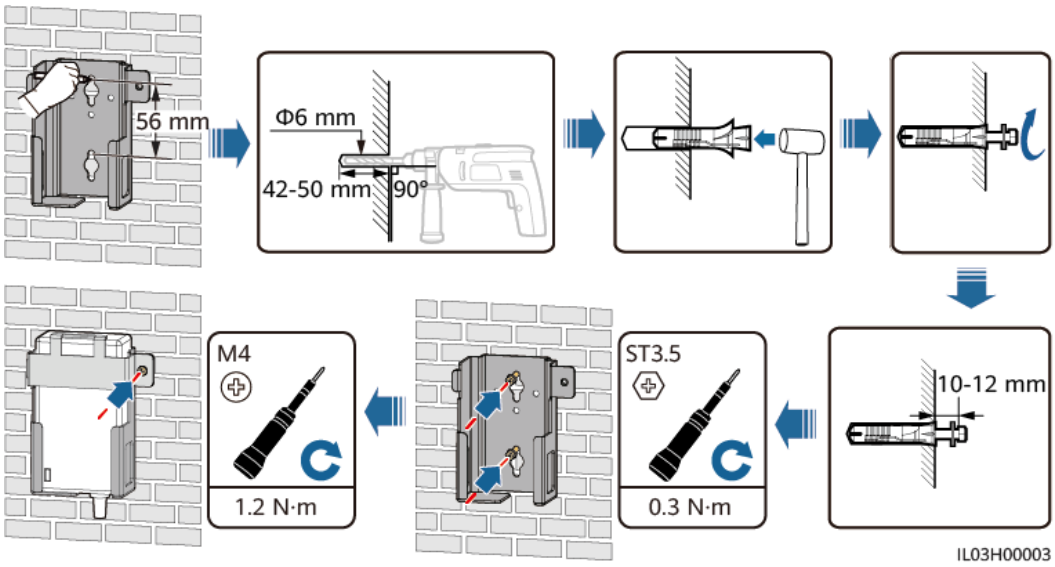

Copyright © Huawei Technologies Co., Ltd.

Figure 3-10 Wall-mounted installation (mode 2)

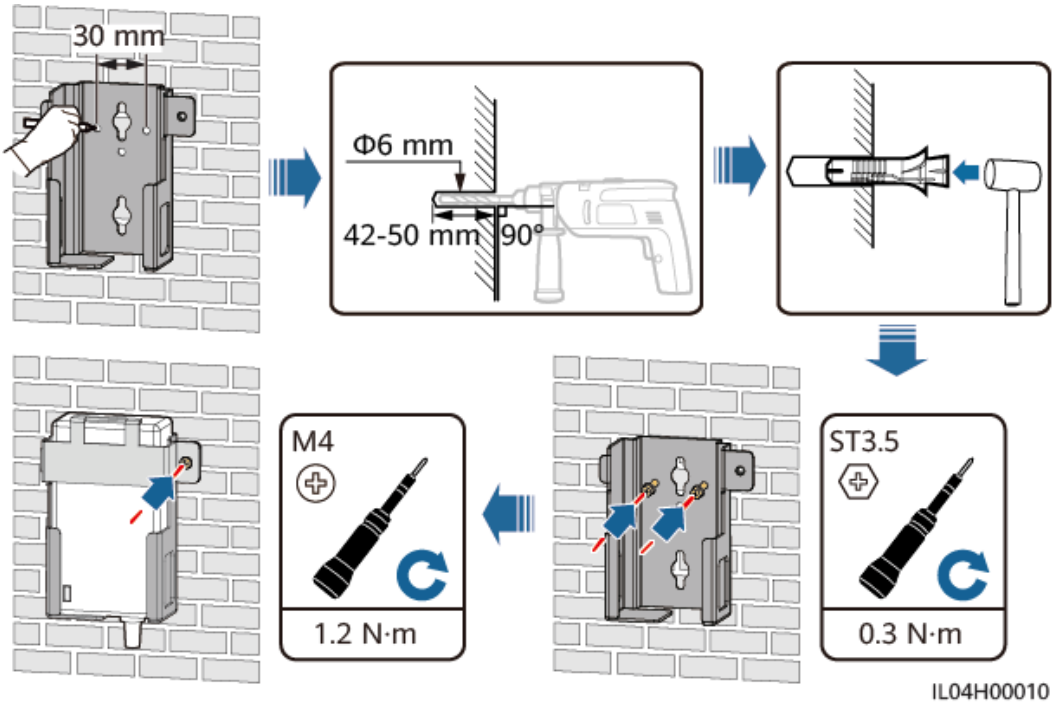

Flat Surface-mounted Installation

Install the power adapter on a flat surface. This section describes how to install the power adapter on the top of the SmartLogger.

Step 1 Place the power adapter horizontally on the top of the SmartLogger.

NOTICE

- Ensure that the power adapter indicator faces upward or outward.
- Ensure that the adapter is securely installed.

Step 2 Plan the cable route of the power adapter to ensure that the SIM card can be installed properly.

 Copyright © Huawei Technologies Co., Ltd.

Figure 3-11 Flat surface-mounted installation

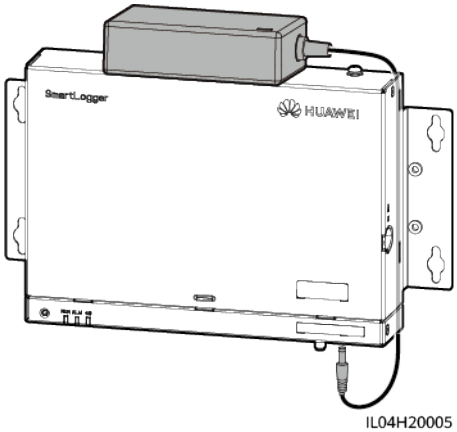

----End

4 Cable Connections

4.1 Connecting Cables to the SmartLogger

4.1.1 Preparing Cables

Type	Recommended Cable Specifications
PE cable	Outdoor copper-core cable with a cross-sectional area of 4–6 mm^2 or 12–10 AWG
RS485 communications cable	Two-core or multi-core outdoor shielded cable with a cross-sectional area of 0.2–2.5 mm^2 or 24–14 AWG
(Optional) MBUS cable	Delivered with the SmartLogger, 1.5 m long
DI signal cable	Two-core or multi-core cable with a cross-sectional area of 0.2–1.5 mm^2 or 24–16 AWG
Output power cable	
AI signal cable	
DO signal cable	
Network cable	Delivered with the SmartLogger, 2.2 m long. If the delivered network cable is too short, you are advised to prepare a network cable of Cat 5e or higher specifications and shielded RJ45 connectors.
(Optional) 24 V input power cable	Two-core cable with a cross-sectional area of 0.2–1.5 mm^2 or 24–16 AWG

 Copyright © Huawei Technologies Co., Ltd.

4.1.2 Connecting a PE Cable

Procedure

Step 1 Connect a PE cable.

Figure 4-1 Connecting a PE cable

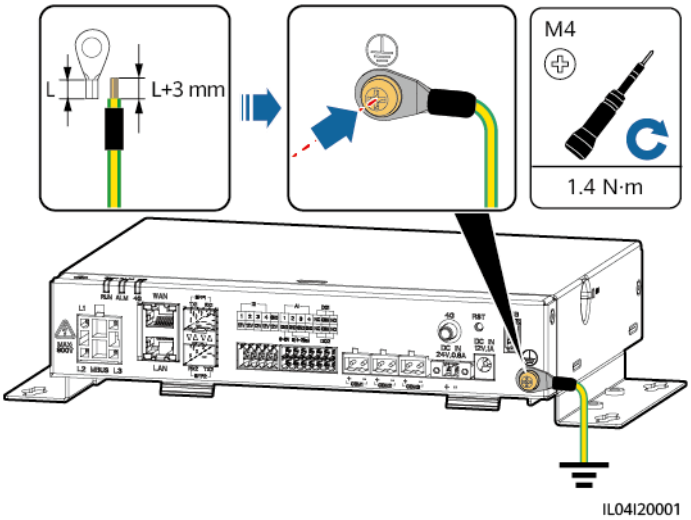

----End

4.1.3 Connecting an RS485 Communications Cable

Context

- The SmartLogger can connect to RS485 communications devices, such as a solar inverter, an EMI, a power meter, and a PID module over the COM port.
- Ensure that RS485+ is connected to COM+ of the SmartLogger and RS485– is connected to the COM– of the SmartLogger.

Procedure

Step 1 Connect an RS485 communications cable.

 Copyright © Huawei Technologies Co., Ltd.

Figure 4-2 Connecting an RS485 communications cable

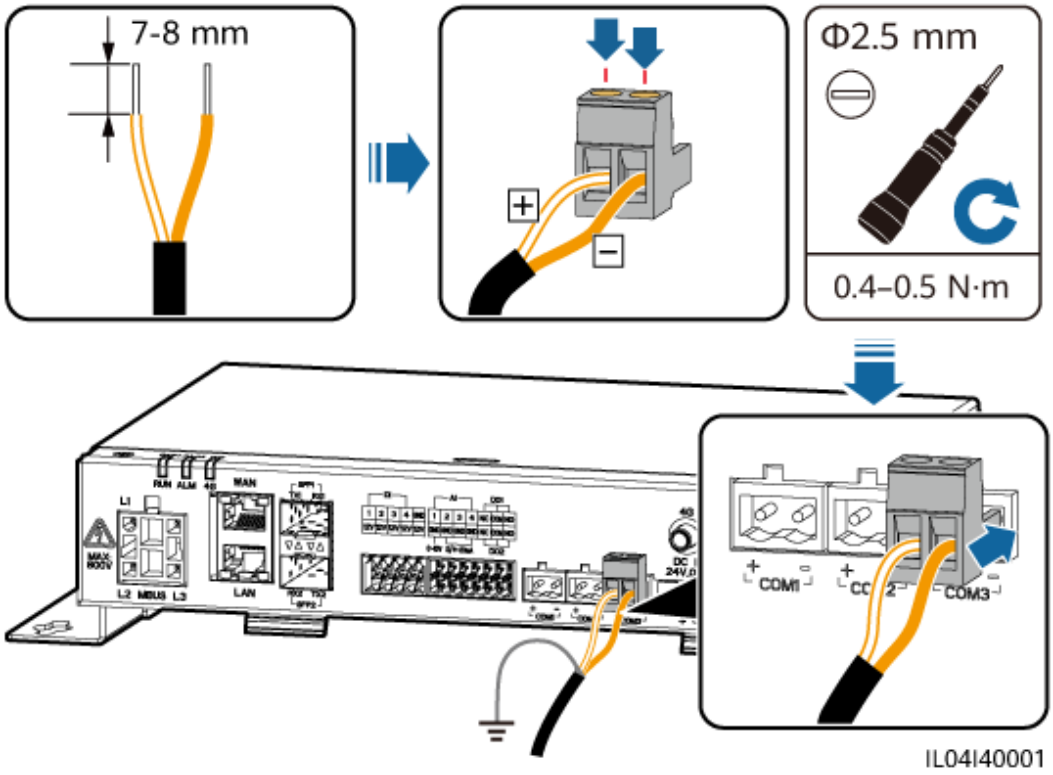

Port	Silk Screen	Description
COM1, COM2, and COM3	+	RS485A, RS485 differential signal+
	–	RS485B, RS485 differential signal–

NOTE

The RS485 communications cable must be a shielded twisted pair, and the shield layer must be grounded (you are advised to connect it to a ground point nearby).

Step 2 If devices need to be cascaded, cascade the devices and then connect them to the SmartLogger.

NOTICE

- You are advised to connect fewer than 30 devices to each RS485 route.
- The baud rate, communications protocol, and parity mode of all devices on an RS485 cascading link must be the same as those of the COM port on the SmartLogger.

 Copyright © Huawei Technologies Co., Ltd.

Figure 4-3 Cascading connection

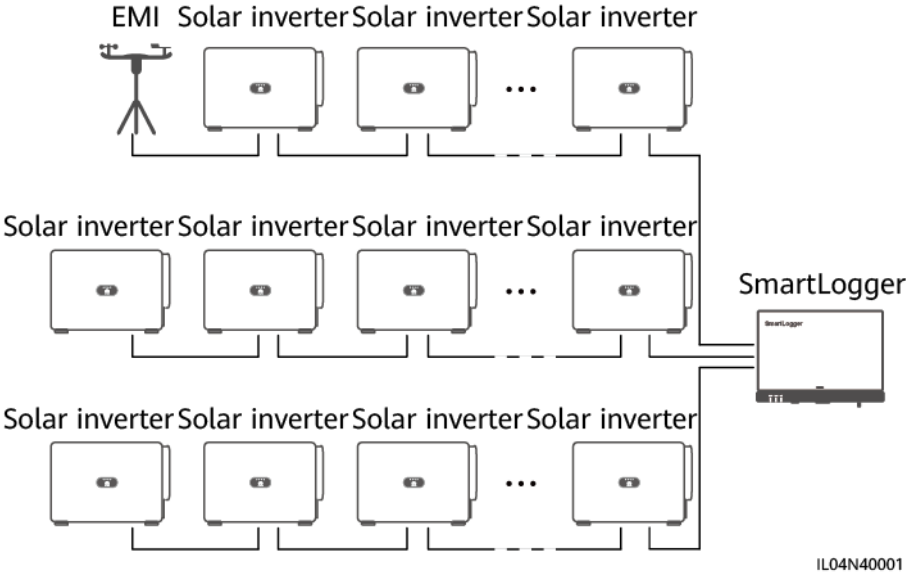

----End

4.1.4 Connecting an MBUS Cable

Context

- If both the SmartLogger and the inverter support MBUS, the SmartLogger can be connected to the inverter through an AC power cable. In this case, you do not need to connect the RS485 communications cable to the inverter.
- If the SmartLogger uses an AC power cable as the communications cable, a miniature circuit breaker (MCB) and a fuse switch disconnector need to be installed to prevent device damage in the case of short circuits.

 Copyright © Huawei Technologies Co., Ltd.

NOTICE

- In regions such as Australia, the local standards require fast power dispatching. The inverter can be set to communicate with the SmartLogger using both the MBUS and RS485 protocols, and the RS485 protocol is used as an independent channel to quickly deliver dispatch commands, implementing fast power dispatching. When the inverter communicates with the SmartLogger using both the MBUS and RS485 protocols, the protocol type of the COM port for connecting the SmartLogger to the inverter must be set to **Modbus-Control** (choose **Settings** > **Comm. Param.** > **RS485** and set the parameter). If this step is not performed, the fast dispatching requirements cannot be met.
- The MBUS communication is applicable to medium-voltage grid connection scenarios and non-low-voltage public grid connection scenarios (industrial environment). The device must be connected to a dedicated step-up transformer or isolation transformer instead of connecting to low-voltage overhead power lines. The total rated power must be > 75 kW. The distance between the device and the residential area shall be > 30 m.
- The distance between the MBUS port of the SmartLogger and the coupling point on the busbar of the transformer station shall be ≤ 10 m. If you have any questions, contact technical support.

Figure 4-4 MBUS networking

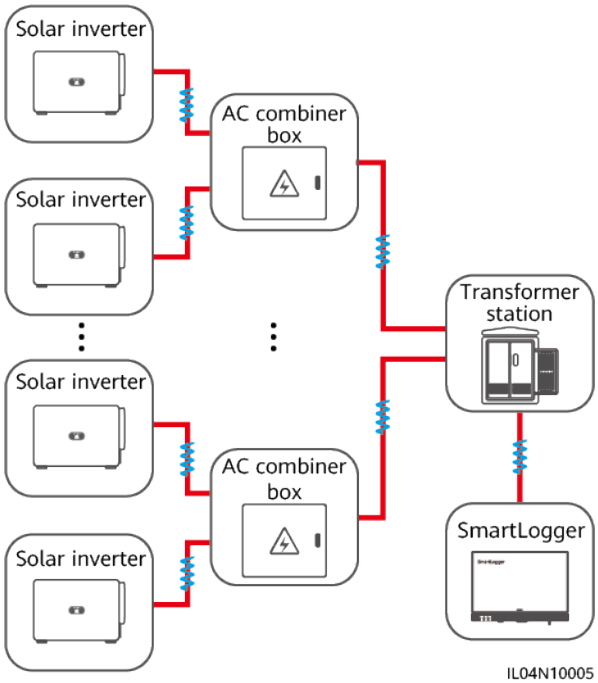

Procedure

Step 1 Connect an MBUS cable.

Copyright © Huawei Technologies Co., Ltd.

Figure 4-5 Connecting an MBUS cable

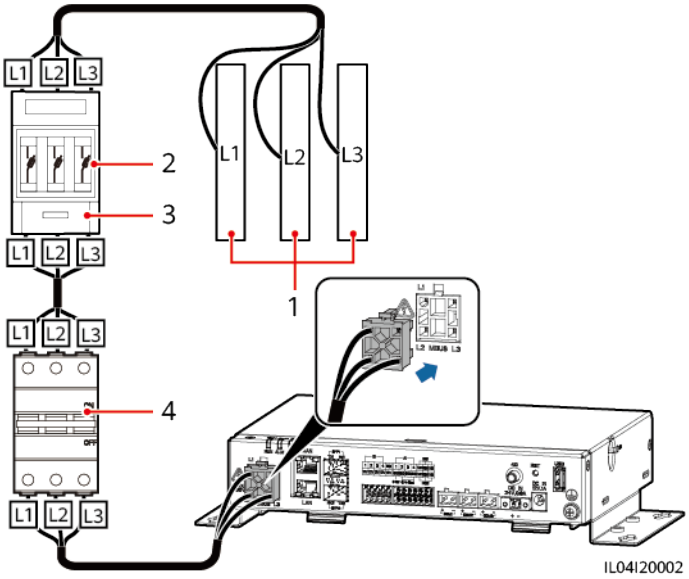

Table 4-1 Components

No.	Component	Specifications	Quantity
1	Busbar L1/L2/L3	-	1
2	Fuse	• When the rated AC voltage on the low-voltage side of the STS is less than or equal to 500 V, the rated voltage of the fuse shall be greater than or equal to 500 V; when the rated AC voltage on the low-voltage side of the STS is greater than 500 V and less than or equal to 800 V, the rated voltage of the fuse shall be greater than or equal to 800 V. • When the rated AC voltage on the low-voltage side of the STS is less than or equal to 500 V, the rated current of the fuse shall be greater than or equal to 6 A; when the rated AC voltage on the low-voltage side of the STS is greater than 500 V and less than or equal to 800 V, the rated current of the fuse shall be greater than or equal to 32 A.	3

Copyright © Huawei Technologies Co., Ltd.

No.	Component	Specifications	Quantity
3	Fuse switch disconnector	• When the rated AC voltage on the low-voltage side of the STS is less than or equal to 500 V, the rated voltage of the fuse switch disconnector shall be greater than or equal to 500 V; when the rated AC voltage on the low-voltage side of the STS is greater than 500 V and less than or equal to 800 V, the rated voltage of the fuse switch disconnector shall be greater than or equal to 800 V. • When the rated AC voltage on the low-voltage side of the STS is less than or equal to 500 V, the rated current of the fuse switch disconnector shall be greater than or equal to 6 A; when the rated AC voltage on the low-voltage side of the STS is greater than 500 V and less than or equal to 800 V, the rated current of the fuse switch disconnector shall be greater than or equal to 32 A. The fuse switch disconnector has three poles.	1
4	MCB	• When the rated AC voltage on the low-voltage side of the STS is less than or equal to 500 V, the rated voltage of the MCB shall be greater than or equal to 500 V; when the rated AC voltage on the low-voltage side of the STS is greater than 500 V and less than or equal to 800 V, the rated voltage of the MCB shall be greater than or equal to 800 V. • When the rated AC voltage on the low-voltage side of the STS is less than or equal to 500 V, the rated current of the MCB shall be greater than or equal to 6 A and less than or equal to 32 A; when the rated AC voltage on the low-voltage side of the STS is greater than 500 V and less than or equal to 800 V, the rated current of the MCB shall be 32 A.	1

Copyright © Huawei Technologies Co., Ltd.

----End

4.1.5 Connecting a DI Signal Cable

Context

The SmartLogger can receive DI signals such as remote power grid scheduling commands and alarms over DI ports. It can only receive passive dry contact signals. It is recommended that the signal transmission distance be less than or equal to 10 m.

Procedure

Step 1 Connect a DI signal cable.

Figure 4-6 Connecting a DI signal cable

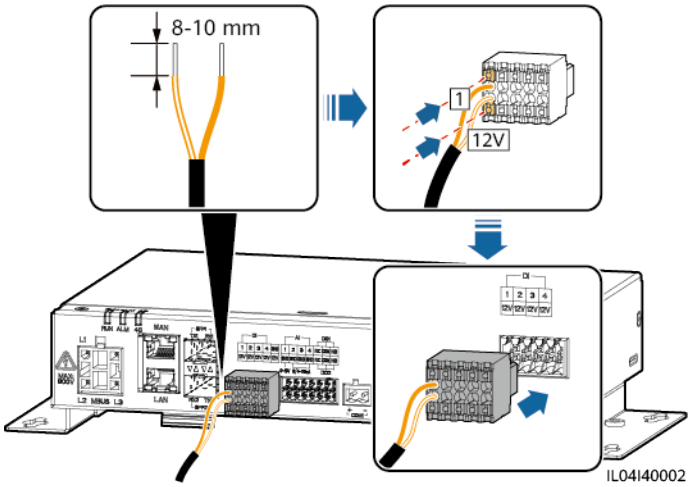

Port		Silk Screen	Description
DI	DI1	1	Can connect to four passive dry contact signals.
		12V	
	DI2	2	
		12V	
	DI3	3	
		12V	
	DI4	4	
		12V	

----End

Copyright © Huawei Technologies Co., Ltd.

4.1.6 Connecting the Output Power Cable

Context

In the export limitation or audible and visual alarm scenario, the SmartLogger can drive the coil of the intermediate relay through the 12 V output power port. It is recommended that the transmission distance be less than or equal to 10 m.

Procedure

Step 1 Connect the output power cable.

Figure 4-7 Connecting the output power cable

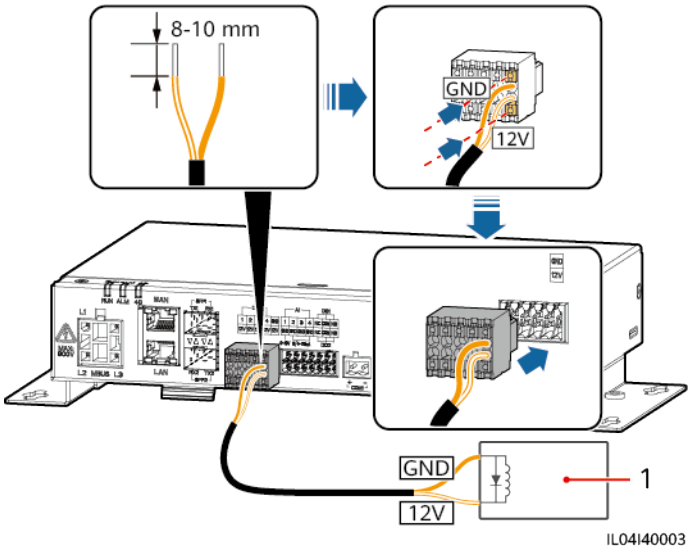

(1) Intermediate relay

----End

4.1.7 Connecting the AI Signal Cable

Context

The SmartLogger can receive AI signals from EMIs over AI ports. It is recommended that the signal transmission distance be less than or equal to 10 m.

Procedure

Step 1 Connect the AI signal cable.

Copyright © Huawei Technologies Co., Ltd.

Figure 4-8 Connecting the AI signal cable

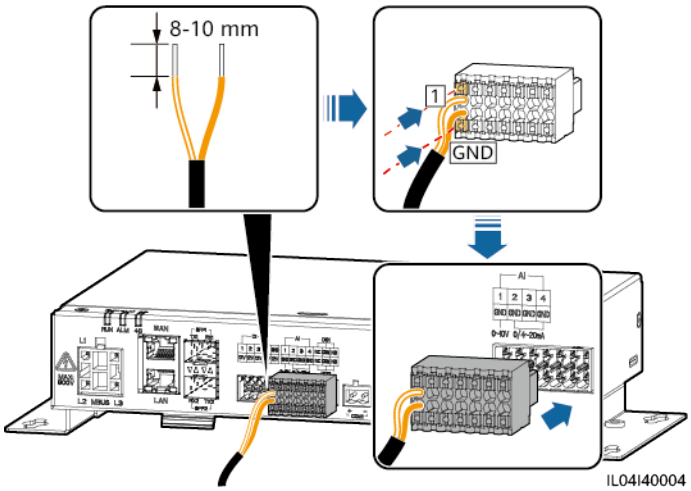

Port		Silk Screen	Description
AI	AI1	1	Supports 0–10 V input voltage.
		GND	
	AI2	2	Support 0–20 mA or 4–20 mA input current.
		GND	
	AI3	3	
		GND	
	AI4	4	
		GND	

NOTE

AI ports 1, 2, 3, and 4 are for AI+ signals, and the GND port is for AI– signals.

----End

4.1.8 Connecting the DO Signal Cable

Context

The DO port supports a maximum of 12 V signal voltage. The NC/COM is a normally closed contact, while the NO/COM is a normally open contact. It is recommended that the signal transmission distance be less than or equal to 10 m.

Procedure

Step 1 Connect the DO signal cable.

 Copyright © Huawei Technologies Co., Ltd.

Figure 4-9 Connecting a DO signal cable

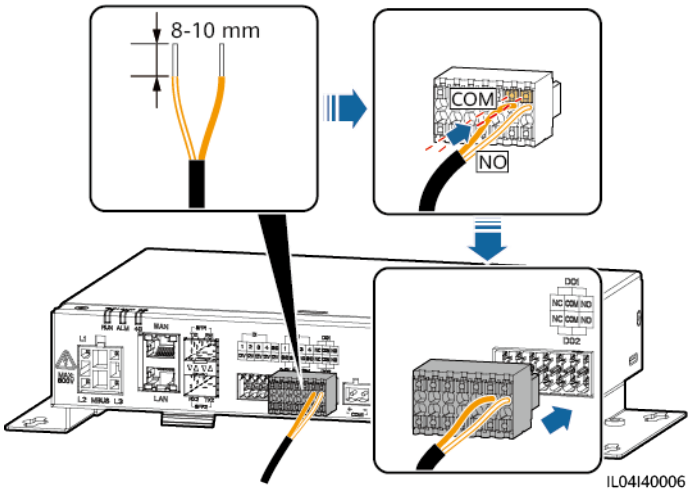

----End

4.1.9 Connecting the Ethernet Cable

Context

- The SmartLogger can connect to an Ethernet switch, router, or PC over a WAN port.
- The SmartLogger can be connected to the SmartModule or a PC over the LAN port.

Procedure

Step 1 Connect the Ethernet cable.

NOTE

When crimping the network cable, ensure that the shielding layer of the cable is securely connected to the metal shell of the RJ45 connectors.

 Copyright © Huawei Technologies Co., Ltd.

Figure 4-10 Connecting an Ethernet cable

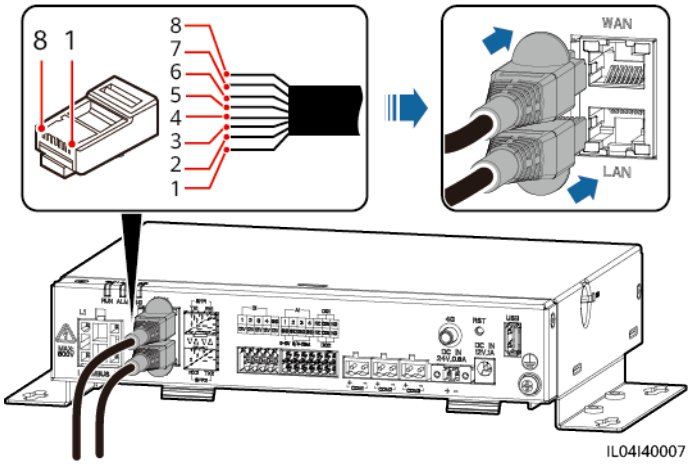

(1) White-and-orange	(2) Orange	(3) White-and-green	(4) Blue
(5) White-and-blue	(6) Green	(7) White-and-brown	(8) Brown

----End

4.1.10 Connecting Fiber Jumpers

Context

The SmartLogger can connect to devices such as the ATB through optical fibers.

Procedure

Step 1 Insert optical modules into the SFP1 and SFP2 ports of the SmartLogger.

NOTICE

- Optical modules are optional. Configure the 100M or 1000M optical module based on the peer port of the optical switch. SFP or eSFP optical modules should be used. The transmission distance supported by the 100M optical module should be less than or equal to 12 km, and the transmission distance supported by the 1000M optical module should be less than or equal to 10 km.
- When inserting an optical module into the SFP1 port, verify that the side with a label faces upward. When inserting an optical module into the SFP2 port, verify that the side with a label faces downward.
- In dual-plane redundancy networking, SFP1 and SFP2 can connect to the northbound monitoring system (IEC104) of the SmartLogger at the same time.

Step 2 Connect the fiber jumpers delivered with the optical modules to the ports on the optical modules.

 Copyright © Huawei Technologies Co., Ltd.

Figure 4-11 Connecting fiber jumpers

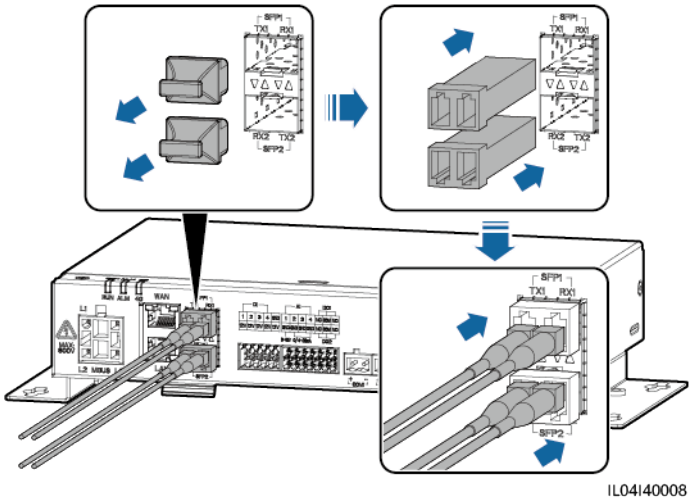

----End

Follow-up Procedure

Disconnection can be performed in reverse order.

NOTE

- When removing a fiber jumper, press down the clip first.
- When removing an optical module, pull it out by the handle. Ensure that the interval between removing and inserting an optical module is greater than 0.2s.

4.1.11 Installing a SIM Card and a 4G Antenna

Context

The SmartLogger provides the 4G wireless communication function. A SIM card of the local carrier can be inserted for dial-up access.

Prepare a standard SIM card (dimensions: 25 mm x 15 mm; capacity ≥ 64 KB) Monthly data package of the SIM card ≥ Monthly data of the inverters + Monthly data of the EMIs + Monthly data of the optimizers + Monthly data of the ESSs + Monthly data of the power meters If other devices are connected to the SmartLogger in the network, the monthly data package of the SIM card needs to be increased as required.

NOTICE

To ensure that the device runs properly, you need to set the domain name of the management system in the SIM card whitelist (add the domain name to the carrier whitelist). If the setting is incorrect, the functions of the device may be restricted or the communication may fail.

 Copyright © Huawei Technologies Co., Ltd.

Table 4-2 SIM card data package recommendation (residential scenario)

Management System	Recommended Monthly SIM Card Data Package			Data Baseline
FusionSolar Smart PV Management System (SmartPVMS)	Inverter	Without power meters or batteries	10 MB + 4 MB x Number of inverters	• Device performance data can be updated every 5 minutes. • Logs of the inverters and I-V diagnosis can be exported monthly. The inverters can be upgraded monthly. If the SmartLogger needs to be upgraded monthly, an addition of 80 MB data is required.
		With power meters	10 MB + 7 MB x Number of inverters	
		With LUNA2000-(5-30)-S0 batteries	13 MB + 7 MB x Number of inverters + 5 MB x Number of power control modules	
	Environmental monitoring instrument (EMI)		3 MB x Number of EMIs	
	Optimizer		2 MB + 0.2 MB x Number of optimizers	

Table 4-3 SIM card data package recommendation (C&I scenario)

Management System	Recommended Monthly SIM Card Data Package			Data Baseline
FusionSolar SmartPVMS	Inverter		15 MB + 16 MB x Number of inverters	• Device performance data can be updated every 5 minutes. • Logs of the inverters, PCSs, ESSs, and I-V diagnosis can be exported monthly. • The inverters, PCSs, and ESSs can be upgraded monthly. If the SmartLogger needs to be upgraded monthly, an addition of 80 MB data is required.
	EMI		3 MB x Number of EMIs	
	Optimizer		2 MB + 0.3 MB x Number of optimizers	
	ESS (including PCS)	LUNA2000-(97KWH-200KWH) series	80 MB + 80 MB x Number of ESSs	
		LUNA2000-2.0MWH-2H1	80 MB + 650 MB x Number of ESSs	

 Copyright © Huawei Technologies Co., Ltd.

Management System	Recommended Monthly SIM Card Data Package			Data Baseline
		LUNA2000-(107-241) series	80 MB + 120 MB x Number of ESSs	
			80 MB + 120 MB x Number of ESSs	
			80 MB + 120 MB x Number of ESSs	
			80 MB + 120 MB x Number of ESSs	
			80 MB + 120 MB x Number of ESSs	
	Power meter		3 MB x Number of power meters	

Procedure

Step 1 Insert a SIM card into the SIM card slot.

NOTICE

- When installing the SIM card, determine its installation direction based on the silk screen.
- Press the SIM card in place to lock it. In this case, the SIM card is correctly installed.
- When removing the SIM card, push it inward to eject it.

Step 2 Install an antenna.

 Copyright © Huawei Technologies Co., Ltd.

Figure 4-12 Installing a SIM card and antenna

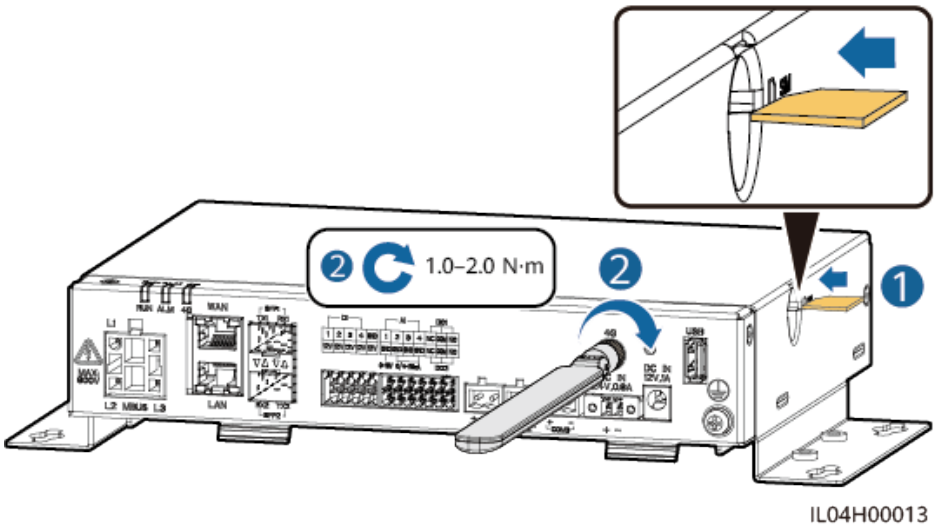

----End

4.1.12 Connecting the 24 V Input Power Cable

Context

The 24 V input power cable needs to be connected in the following scenarios:

- Scenario 1: The 24 V DC power supply is used.
- Scenario 2: The SmartLogger connects to the power supply through the 12 V input power port, and the 24 V input power port functions as the 12 V output power port to supply power to devices.

Procedure

Step 1 Connect the input power cable.

Figure 4-13 Connecting the input power cable

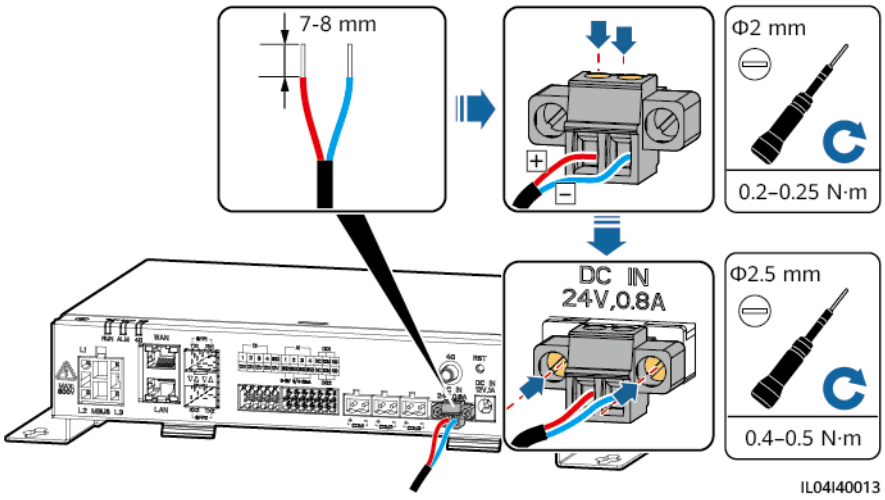

----End

Copyright © Huawei Technologies Co., Ltd.

4.2 Connecting Cables to the SmartModule

4.2.1 Preparing Cables

Type	Recommended Cable Specifications
PE cable	Outdoor copper-core cable with a cross-sectional area of 4–6 mm^2 or 12–10 AWG
Network cable	The cable is delivered with the SmartModule and is 0.35 m long. If the delivered network cable is too short, you are advised to prepare a network cable of Cat 5e or higher specifications and shielded RJ45 connectors.
12 V input power cable	The cable is delivered with the SmartModule and is 0.5 m long.
RS485 communications cable	Two-core or multi-core outdoor shielded cable with a cross-sectional area of 0.2–2.5 mm^2 or 24–14 AWG
DI signal cable	Two-core or multi-core cable with a cross-sectional area of 0.2–1.5 mm^2 or 24–16 AWG
Output power cable	
AI signal cable	
PT signal cable	For details about the cables and cable connection operations, see the documents delivered with the PT100/PT1000.
(Optional) 24 V input power cable	Two-core cable with a cross-sectional area of 0.2–1.5 mm^2 or 24–16 AWG

4.2.2 Connecting the PE Cable

Procedure

Step 1 Connect the PE cable.

 Copyright © Huawei Technologies Co., Ltd.

Figure 4-14 Connecting a PE cable

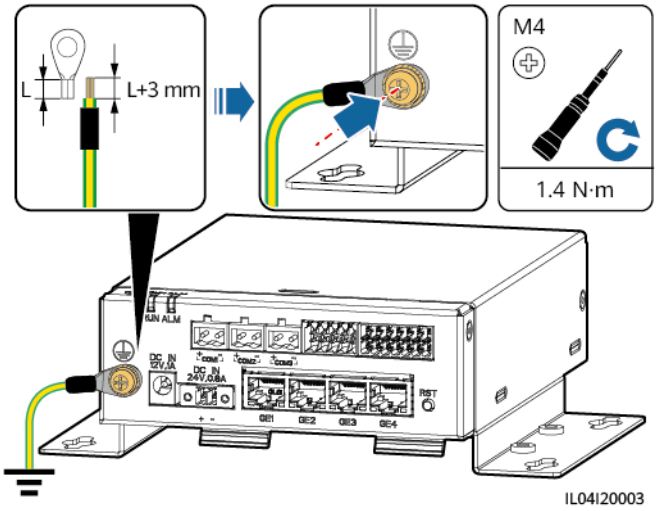

NOTE

If the SmartLogger is connected to the SmartModule over a connecting plate, connect a PE cable to the ground point of the SmartLogger or SmartModule based on site requirements.

----End

4.2.3 Connecting the Ethernet Cable

Context

- The SmartModule can be connected to the SmartLogger and a PC over the GE port.
- Connect the LAN port of the SmartLogger to one of the GE ports (GE1 and GE4 recommended) of the SmartModule through an Ethernet cable. The IP address can be obtained through DHCP and the registration can be completed automatically.
- If the SmartModule is connected to devices such as the Smart PCS in a ring network in hand-in-hand mode using Ethernet cables, the GE2 and GE3 ports of the SmartModule must be used. Otherwise, the SmartLogger cannot communicate with the devices such as the Smart PCS.

Procedure

Step 1 Connect the Ethernet cable.

NOTE

When crimping the network cable, ensure that the shielding layer of the cable is securely connected to the metal shell of the RJ45 connectors.

 Copyright © Huawei Technologies Co., Ltd.

Figure 4-15 Connecting an Ethernet cable

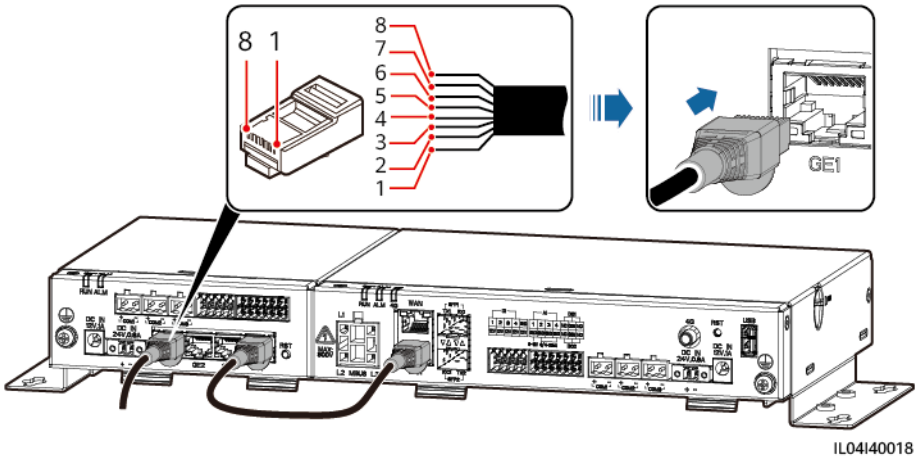

(1) White-and-orange	(2) Orange	(3) White-and-green	(4) Blue
(5) White-and-blue	(6) Green	(7) White-and-brown	(8) Brown

----End

4.2.4 Connecting the 12 V Input Power Cable

Context

The SmartLogger connects to the power supply through the 12 V input power port, and the 24 V input power port of the SmartLogger functions as the 12 V output power port to supply power to the SmartModule.

Procedure

Step 1 Connect the 12 V input power cable.

Figure 4-16 Connecting the 12 V input power cable

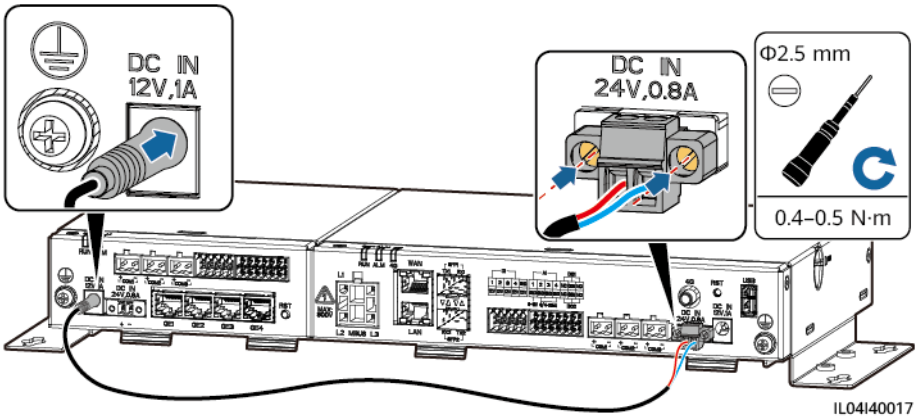

----End

Copyright © Huawei Technologies Co., Ltd.

4.2.5 Connecting the RS485 Communications Cable

Context

- The SmartModule can connect to RS485 communications devices, such as a solar inverter, an EMI, a power meter, and a PID module over the COM port.
- Ensure that RS485+ is connected to COM+ of the SmartModule and RS485– is connected to the COM– of the SmartModule.

Procedure

Step 1 Connect the RS485 communications cable.

Figure 4-17 Connecting an RS485 communications cable

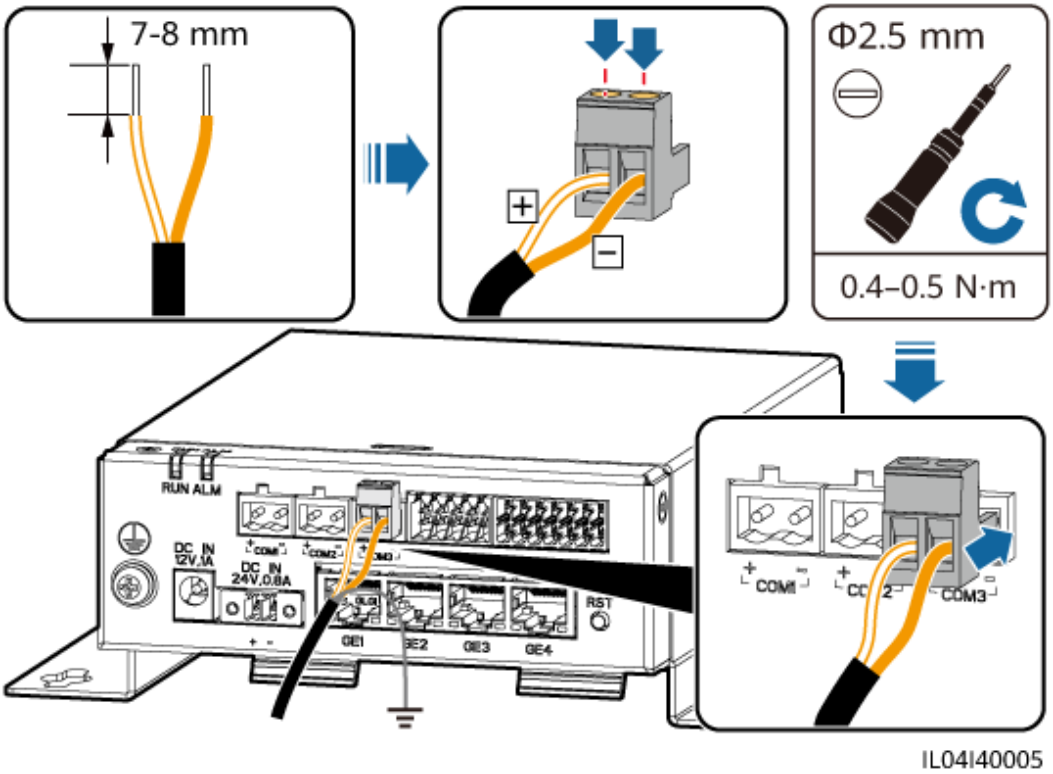

Port	Silk Screen	Description
COM1, COM2, and COM3	+	RS485A, RS485 differential signal+
	–	RS485B, RS485 differential signal–

NOTE

The RS485 communications cable must be a shielded twisted pair, and the shield layer must be grounded (you are advised to connect it to a ground point nearby).

 Copyright © Huawei Technologies Co., Ltd.

Step 2 If devices need to be cascaded, cascade the devices and then connect them to the SmartModule.

NOTICE

- You are advised to connect fewer than 30 devices to each RS485 route.
- The baud rate, communications protocol, and parity mode of all devices on an RS485 cascading link must be the same as those of the COM port on the SmartModule.

Figure 4-18 Cascading connection

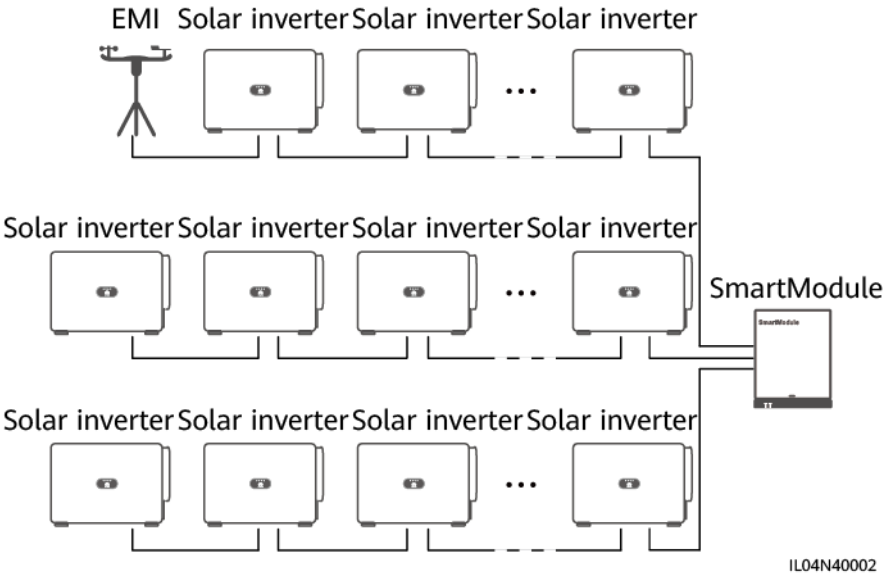

----End

4.2.6 Connecting the DI Signal Cable

Context

The SmartModule can receive DI signals such as remote commands and alarms over DI ports. It can only receive passive dry contact signals. It is recommended that the signal transmission distance be less than or equal to 10 m.

Procedure

Step 1 Connect the DI signal cable.

 Copyright © Huawei Technologies Co., Ltd.

Figure 4-19 Connecting the DI signal cable

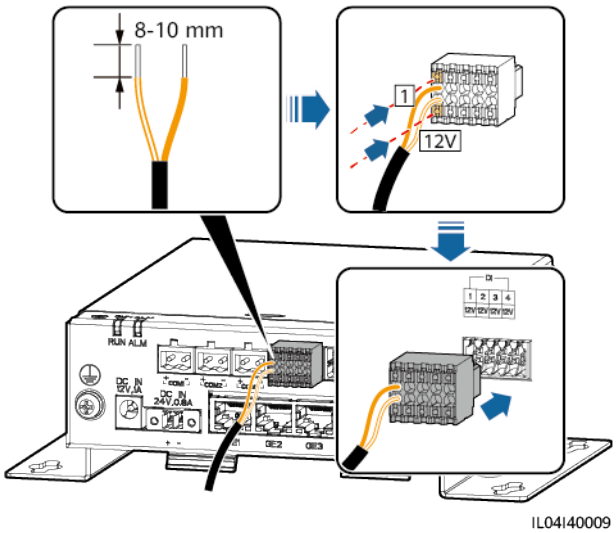

Port		Silk Screen	Description
DI	DI1	1	Can connect to four passive dry contact signals.
		12V	
	DI2	2	
		12V	
	DI3	3	
		12V	
	DI4	4	
		12V	

----End

4.2.7 Connecting the Output Power Cable

Context

In the export limitation or audible and visual alarm scenario, the SmartModule can drive the coil of the intermediate relay through the 12 V output power port. It is recommended that the transmission distance be less than or equal to 10 m.

Procedure

Step 1 Connect the output power cable.

 Copyright © Huawei Technologies Co., Ltd.

Figure 4-20 Connecting the output power cable

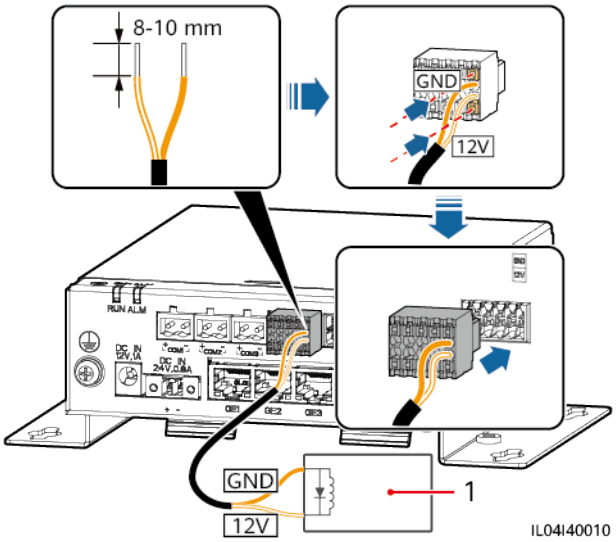

(1) Intermediate relay

----End

4.2.8 Connecting the AI Signal Cable

Context

The SmartModule can receive AI signals from EMIs over AI ports. It is recommended that the signal transmission distance be less than or equal to 10 m.

Procedure

Step 1 Connect the AI signal cable.

Figure 4-21 Connecting the AI signal cable

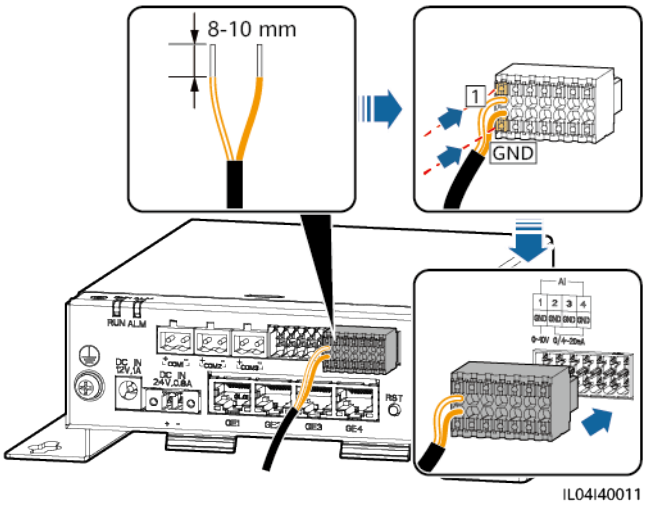

 Copyright © Huawei Technologies Co., Ltd.

Port		Silk Screen	Description
AI	AI1	1	Supports 0–10 V input voltage.
		GND	
	AI2	2	Support 0–20 mA or 4–20 mA input current.
		GND	
	AI3	3	
		GND	
	AI4	4	
		GND	

NOTE

AI ports 1, 2, 3, and 4 are for AI+ signals, and the GND port is for AI– signals.

----End

4.2.9 Connecting the PT Signal Cable

Context

The SmartModule provides two PT ports, which can be used to connect to three-wire or two-wire PT100/PT1000 temperature sensors.

When a PT port needs to be connected to a two-wire PT100/PT1000, use a short-circuit cable to short-circuit **GND** and **–** of the port.

NOTE

Only the SmartModule can be used to connect to a PT100/PT1000 temperature sensor.

Procedure

Step 1 Connect the PT signal cable.

Figure 4-22 Connection to a three-wire PT100/PT1000

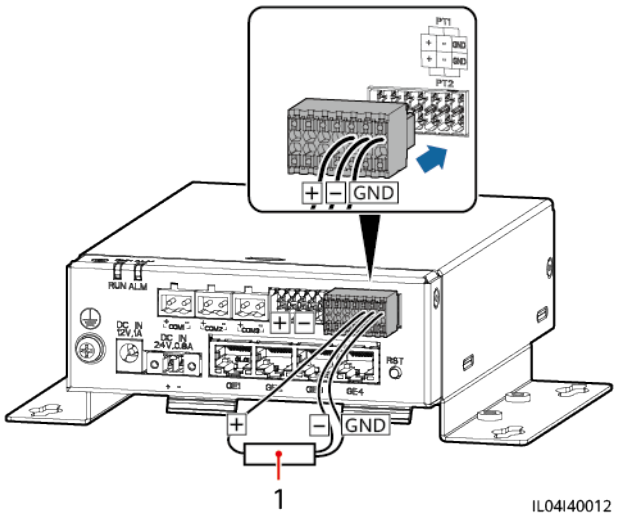

(1) PT100/PT1000 temperature sensor

Figure 4-23 Connection to a two-wire PT100/PT1000

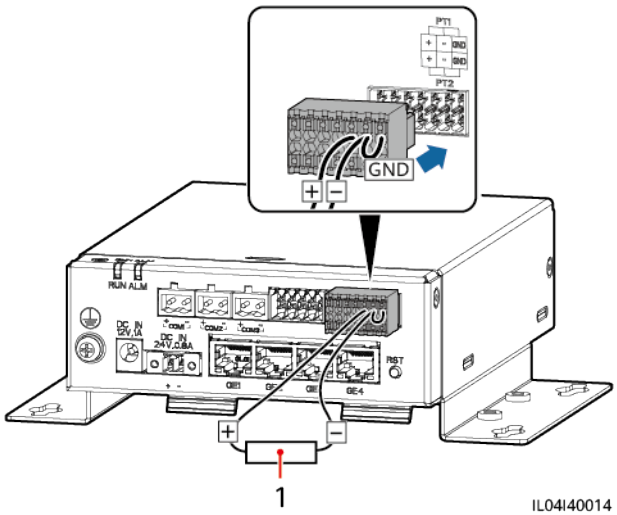

(1) PT100/PT1000 temperature sensor

NOTE

The PT100/PT1000 temperature sensor cannot be automatically identified. After the cable connection is completed, add the device and set related parameters by referring to **6.3.17.2 Setting AI EMI Parameters**. Ensure that **Device type** is set to **EMI** and **Connection mode** is set to **AI**.

----End

4.2.10 Connecting the 24 V Input Power Cable

Context

The 24 V input power cable needs to be connected in the following scenarios:

- Scenario 1: The 24 V DC power supply is used.
- Scenario 2: The SmartModule connects to the power supply through the 12 V input power port, and the 24 V input power port functions as the 12 V output power port to supply power to devices.

Procedure

Step 1 Connect the input power cable.

Figure 4-24 Connecting the input power cable

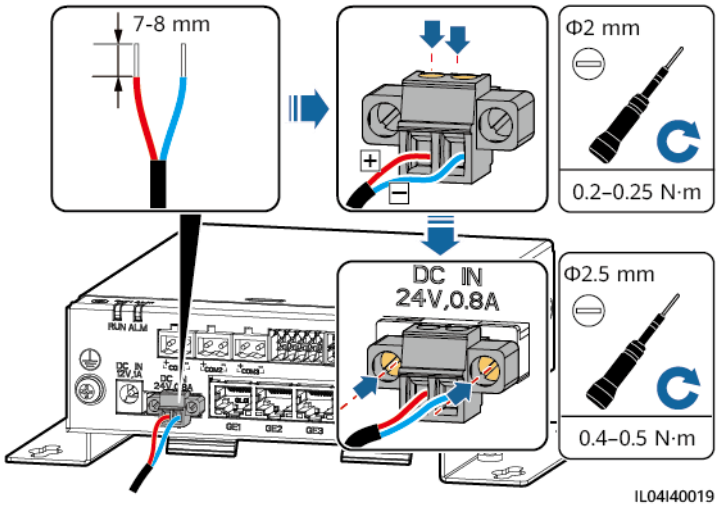

----End

Copyright © Huawei Technologies Co., Ltd.

5 System Operation

5.1 Check Before Power-On

No.	Expected Result
1	The SmartLogger and SmartModule are installed properly.
2	All cables are securely connected.
3	Routing for the power cables and signal cables meets the requirements for routing electrical and ELV cables and complies with the cable routing plan.
4	Cables are bound neatly, and cable ties are spaced evenly, secured properly, and face the same direction.
5	There are no unnecessary adhesive tapes or cable ties on cables.

5.2 Powering On the System

Step 1 Connect the power supply.

- **Method 1**: When a power adapter is used, connect the power adapter cable and turn on the switch on the AC socket side.

NOTE

- The rated input voltage of the power adapter is 100–240 V AC, and the rated input frequency is 50/60 Hz.
- Select an AC socket that matches the power adapter.

 Copyright © Huawei Technologies Co., Ltd.

Figure 5-1 Power supply through the power adapter

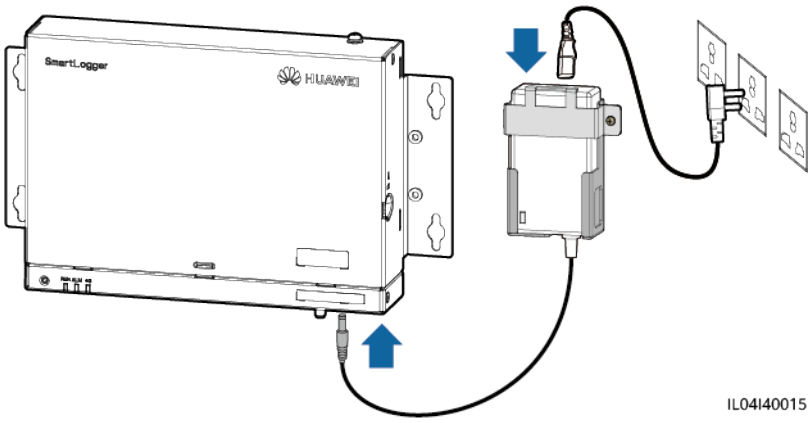

- **Method 2**: When a DC power supply is used, check that the cable between the DC power supply and the SmartLogger as well as the SmartModule is connected properly, and turn on the upstream power switch of the DC power supply.

Step 2 When MBUS is used for communication, turn on all the upstream switches of the MBUS port.

----End

 Copyright © Huawei Technologies Co., Ltd.

6 WebUI Operations

6.1 Introduction to WebUI

NOTICE

- The web user interface (WebUI) figures in this document are for reference only. The actual WebUI may vary.
- The parameter names, value ranges, and default values are subject to change. The actual display may vary.
- Delivering a reset, shutdown, or upgrade command to the inverter and Smart PCS may cause the inverter and Smart PCS to disconnect from the grid, which affects the energy yield.
- Only professionals are allowed to set the grid parameters, protection parameters, feature parameters, and power adjustment parameters of the inverter and Smart PCS. If the power grid parameters, protection parameters, and feature parameters are incorrectly set, the inverter and Smart PCS may disconnect from the power grid. If the power adjustment parameters are incorrectly set, the inverter and Smart PCS may fail to connect to the power grid as required. In these cases, the energy yield will be affected.
- Only professionals are allowed to set the power grid scheduling parameters of the SmartLogger. Incorrect settings may cause the plant to fail to connect to the power grid as required, which affects the energy yield.

 Copyright © Huawei Technologies Co., Ltd.

6.1.1 WebUI Layout

Figure 6-1 WebUI layout

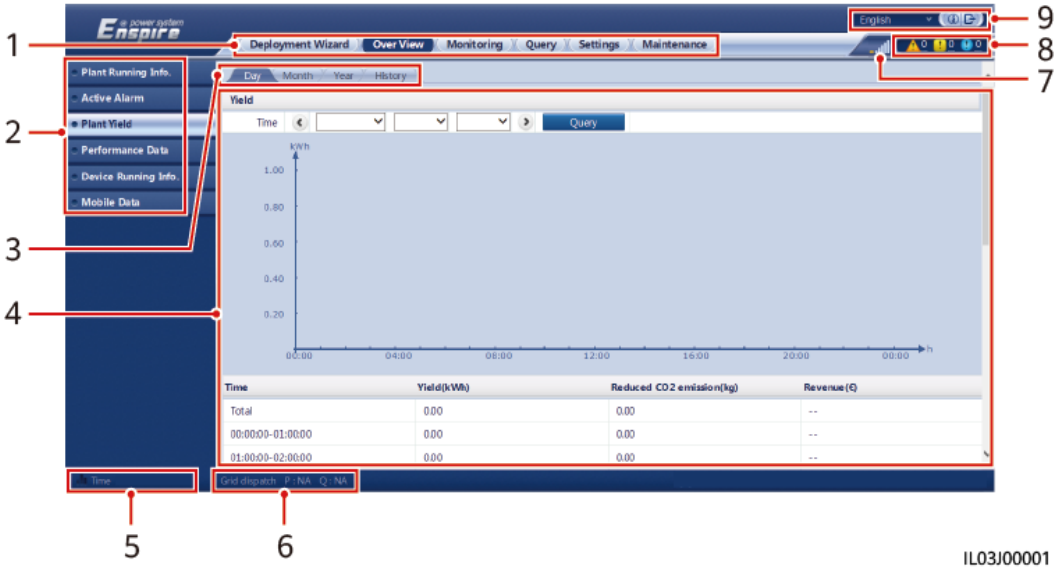

No.	Function	Description
1	First-level menu	Choose the corresponding first-level menu before you perform any operation over the WebUI.
2	Second-level menu	Under the first-level menu, choose the device to be queried or the parameter to be set under the second-level menu.
3	Third-level menu	• After choosing a second-level menu, choose a third-level menu to access the query or setting page. • There are no third-level menus under certain second-level menus.
4	Details page	Displays details of the queried information or parameter setting.
5	System time	Displays the current system time.
6	Power grid scheduling status	Displays the current power grid scheduling mode and scheduling value of the system.
7	Icon for SIM card signal strength	Displays the signal strength of the SIM card.
8	Alarm icon	Displays the severities and number of active system alarms. You can click a number to access the alarm page.
9	Display language	Selects the display language or chooses to log out.

 Copyright © Huawei Technologies Co., Ltd.

6.1.2 Permission Description

Table 6-1 Permission description

First-Level Menu	Administrator	Advanced User	Common User
Deployment Wizard	Supported	Supported	Not supported
Overview	Supported	Supported	Supported
Monitoring	Supported	Supported	Parameter setting functions such as **Running Param.** and **Characteristic Curve** are not supported.
Query	Supported	Supported	Only **Alarm History** and **Security Event** are supported.
Settings	Supported	Supported	Only **Date&Time** and **Plant** are supported.
Maintenance	Supported	**User Management** and **Restore Factory Settings** and **Clear User Data** in **System Maint.** are not supported.	Only **Product Information** and **Security Settings** are supported.

6.2 Device Commissioning

Prerequisites

- Device and cable installation has been checked according to the specifications and requirements of PV and energy storage plants.
- Devices in the PV and energy storage plants and SmartLogger are powered on.
- You have obtained the IP address of the SmartLogger as well as the user name and password used for logging in to the WebUI.

Context

After installing or replacing a device or SmartLogger, you need to set device parameters and add the device.

 Copyright © Huawei Technologies Co., Ltd.

6.2.1 Preparations and WebUI Login

Prerequisites

- The operating system of Windows 7 or later is supported.
- Browser: Chrome 52, Firefox 113, or a later version is recommended.
- It is recommended that a maximum of two users log in to the WebUI at the same time.
- When the same IP address and browser are used to log in to different versions of the SmartLogger3000, you need to clear all browser caches between two logins and restart the browser. Otherwise, the system may be abnormal, affecting normal use.

Procedure

Step 1 Connect the network cable between the network port of the PC and the WAN or LAN port of the SmartLogger. It is recommended that the PC be connected to the LAN port of the SmartLogger.

Step 2 Set the IP address for the PC on the same network segment as the SmartLogger IP address.

Connected Port	Item	SmartLogger Default Value	Example PC Setting
LAN port	IP address	192.168.8.10	192.168.8.11
	Subnet mask	255.255.255.0	255.255.255.0
	Default gateway	192.168.8.1	192.168.8.1
WAN port	IP address	192.168.0.10	192.168.0.11
	Subnet mask	255.255.255.0	255.255.255.0
	Default gateway	192.168.0.1	192.168.0.1

NOTE

- When the IP address of the WAN port is in the network segment from 192.168.8.1 to 192.168.8.255, set the default gateway to 192.168.8.1 and the IP address of the LAN port to 192.168.3.10. If the connected port is a LAN port, you need to adjust the network configuration of the PC.
- It is recommended that the PC be connected to the LAN port of the SmartLogger or the GE port of the SmartModule. When the PC is connected to the GE port of the SmartModule, adjust the network configuration of the PC to the configuration mode when the PC is connected to the LAN port of the SmartLogger.
- If the IP addresses of the WAN and LAN ports on the SmartLogger are changed and the SmartLogger cannot be logged in on the WebUI due to IP address loss, you can view the current IP address on the app by referring to the **FusionSolar App and SUN2000 App Device Commissioning Guide**.

Step 3 Set LAN parameters.

 Copyright © Huawei Technologies Co., Ltd.

NOTICE

- If the SmartLogger is connected to a LAN and a proxy server has been configured, you need to cancel the proxy server configurations.
- If the SmartLogger is connected to the Internet and the PC is connected to the LAN, do not cancel the proxy server configurations.
- You are advised to set the same subnet mask for all Ethernet ports. If different subnet masks are required, set different network IDs. Otherwise, the WebUI may fail to be accessed.

1. Open Internet Explorer.
2. Choose **Tools** > **Internet Options**.
3. Click the **Connections** tab and then click **LAN settings**.
4. Clear **Use a proxy server for your LAN**.

Figure 6-2 LAN settings

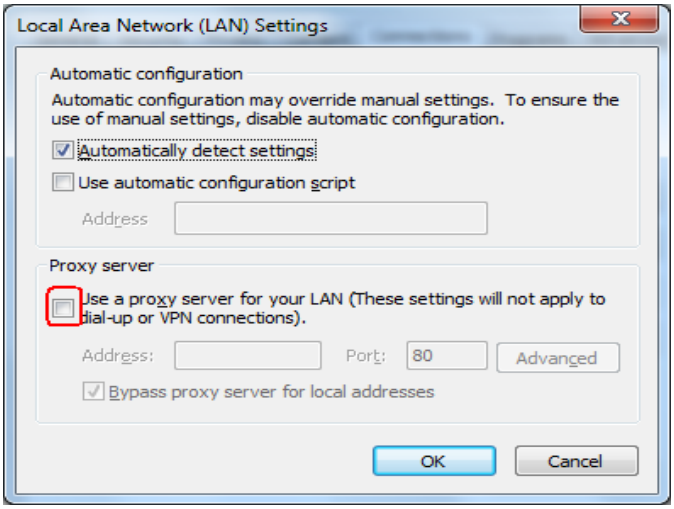

5. Click **OK**.

Step 4 Log in to the SmartLogger WebUI.

1. In the address box of a browser, enter **https://XX.XX.XX.XX** (*XX.XX.XX.XX* is the IP address of the SmartLogger) and press **Enter**. The login page is displayed.

   If you log in to the WebUI for the first time, a security risk warning is displayed. Click **Continue to this website** to log in to the WebUI.

 Copyright © Huawei Technologies Co., Ltd.

NOTE

- It is recommended that users use their own certificates. If the certificate is not replaced, the security risk warning will be displayed during each login.
- After logging in to the WebUI, you can import a certificate under **Maintenance** > **Security Settings** > **Network Security Certificate**.
- The imported security certificate needs to be bound to the SmartLogger IP address. Otherwise, the security risk warning will still be displayed during login.
- If an error message "ERR_INSUFFICIENT_RESOURCES" is displayed for the browser during login, the browser resources are insufficient. Clear the cache and restart the browser.
- If an error message "ERR_CONNECTION_TIMED_OUT" is displayed for the browser during login, perform the following troubleshooting operations:
  - Check whether the browser proxy is abnormal. If yes, set the browser proxy according to step 3.
  - Check whether the IP address of another device conflicts with that of the SmartLogger. If yes, assign a new IP address.

Figure 6-3 Security risk warning

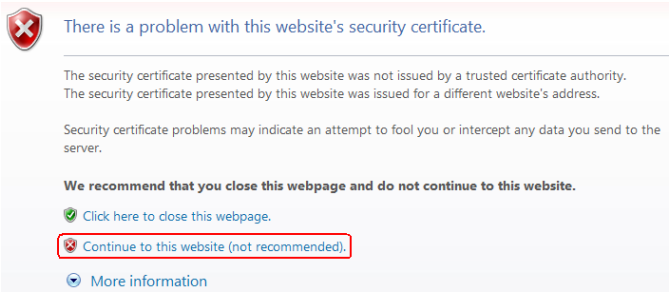

2. Select a desired language.
3. Select **User Name** and enter **Password** according to the following table, and then click **Log In**.

SmartLogger Version	Username	Initial Password
Factory version earlier than V300R023C00	admin	Changeme
Upgraded to V300R023C00 or later	installer	No initial password is available. You can set a password as required.
	admin	Changeme
Factory version V300R023C00 or later	installer	No initial password is available. You can set a password as required.

 Copyright © Huawei Technologies Co., Ltd.

NOTE

- Update the SmartLogger software as required.
- To ensure account security, protect the password by changing it periodically, and keep it secure. Your password might be stolen or cracked if it is left unchanged for extended periods. If you lose the password, the device must be restored to its factory settings. In these cases, the Company shall not be liable for any loss caused to the plant.
- You will be locked out for 10 minutes after five consecutive failed password attempts in 5 minutes.
- A dialog box with recent login information is displayed after login. Click **OK**.
- If the password of a non-administrator account is lost, you must reset the password using an administrator account. The administrator resets the password and enters the initial password. The non-administrator user logs in to the system using the initial password provided by the administrator. After the login, the user is forced to change the password.
- If the password of an administrator account is lost, hold down the RST button on the SmartLogger for 10–20s to enter the safe mode. After the SmartLogger enters the safe mode, the device parameter settings are retained. Personal privacy and sensitive data, including login passwords and email addresses, will be deleted. SmartLogger V300R023C00 and later versions support this function.

4. Choose **Monitoring** > **Logger(Local)** > **About** to view the SmartLogger software version and check whether software upgrade is needed.
5. (Optional) To upgrade the SmartLogger software version, contact the Company's engineers to obtain the upgrade package and guide and complete the upgrade accordingly.

NOTE

- After the software upgrade is complete, the SmartLogger automatically restarts. Log in to the SmartLogger WebUI again 3 minutes later.
- If the SmartLogger is upgraded from V300R001C00 to V800R021C00, the original administrator **admin** becomes an advanced user, and the login password remains unchanged. If administrator rights are required, log in to the SmartLogger as **installer**. The password is the same as that for logging in to the mobile app. If the SmartLogger is upgraded from V800R021C00 to V300R023C00, the login passwords of the advanced user **admin** and administrator **installer** remain unchanged.
- If the SmartLogger is upgraded from V300R001C00 to V300R023C00, the original administrator **admin** becomes an advanced user, and the login password remains unchanged. If administrator rights are required, log in to the SmartLogger as **installer** and set the login password as prompted.

----End

Follow-up Procedure

If any page is blank or a menu cannot be accessed after you log in to the WebUI, clear the cache, refresh the page, or log in again.

6.2.2 Commissioning Using the Deployment Wizard

Context

The deployment wizard allows you to set basic SmartLogger parameters, connect devices, power meters, and EMIs, configure battery control, management system,

and third-party management system, third-party devices, and microgrid parameters.

After the SmartModule communicates with the SmartLogger properly, the SmartLogger automatically identifies the SmartModule. The device name of the SmartModule is **Module(M1)**, and the corresponding port is **M1.port**.

Procedure

NOTE

- Microgrid control is displayed only when the C&I ESS is connected.
- During parameter setting, click **Previous**, **Next**, or **Skip** as required. For details, see **Help** on the page.

Step 1 Click **Deployment Wizard** and set basic parameters.

- Set basic parameters.

Figure 6-4 Setting basic parameters

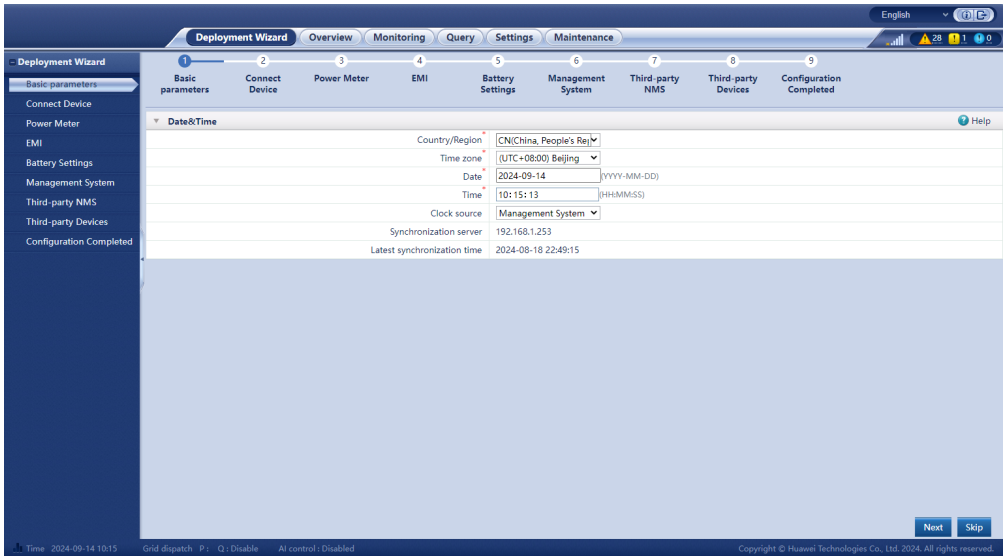

- Select a communication mode based on the site requirements.

Step 2 Connect devices.

- Set the startup authorization code of the ESS. Enter the startup authorization code and click to complete the startup authorization for the ESS. Otherwise, the ESS cannot be started. Contact the device vendor or its authorized supervision service provider to apply for a startup authorization code through the Power Partner app. This function is supported in SmartLogger V300R024C00 and later versions, which shall be matched with the version of the ESS software.
  - C&I scenario: LUNA2000B V200R024C00 and later versions
  - Utility-scale scenario: LUNA2000C V200R024C10 and later versions or LUNA2000C V100R023C00 and later versions
- Click **Search for Device** to search for devices.

Figure 6-5 Searching for devices

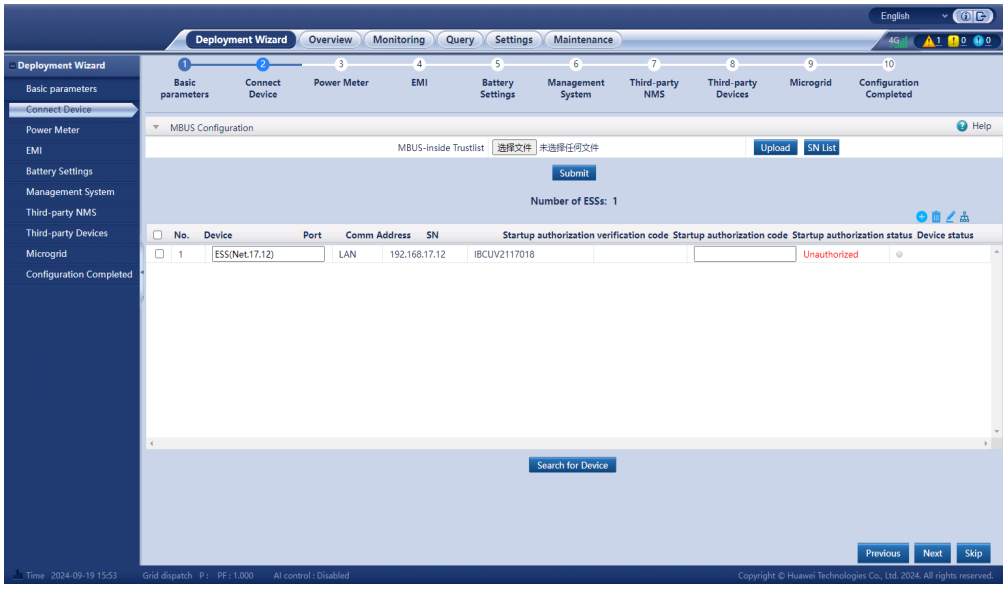

NOTE

- During the process of **Search for Device**, do not perform upgrade operations (such as upgrading through the app, management system, or WebUI).
- When you click **Search for Device**, cable connections will be checked before device search (not applicable to third-party devices), and device addresses will be automatically allocated. For certain models, device search and cable connection check are performed separately. Click **Search for Device** to start device search (not applicable to third-party devices) and address allocation. After the device search is complete, click **Wiring inspection** to check cable connections. In the PV-only or PV +ESS scenario, if **Failed to allocate the address. Try again.** is displayed when you click **Search for Device**, wait for 1 minute and click **Search for Device** again.
- After the cable connection check is complete, if a cable connection alarm is generated, you can click the alarm icon to view the corresponding alarm information.
- If an alarm is generated when the cable connection check fails, click the alarm icon to view the alarm cause and handling suggestions. After the fault is rectified, check the cable connections again.
- After the cable connection check and device search are complete, click to view the corresponding topology information.
- After a device is added or deleted, you need to click **Search for Device** again in **Deployment Wizard**. Otherwise, the system topology will not be updated.

- Set parameters such as **Grid Code** and **Working mode**.

 Copyright © Huawei Technologies Co., Ltd.

Table 6-2 Setting array parameters

Parameter	Description
Scenario under **Arrays Operation Scenario**	– In the on-grid scenario, set this parameter to **On-grid**. – In the off-grid scenario, set this parameter to **Off-grid**. – In the on/off-grid switching scenario, set this parameter to **On/Off-grid**.
Standby mode under **The subarray hot standby mode**	– Zero-power operation When the Smart PCS does not receive power dispatch commands, it continues operating, drawing a small amount of electricity from the power grid to maintain the battery SOC while remaining responsive to power dispatch commands in real time. This mode applies to scenarios where power can be obtained from the power grid to maintain the SOC. – Seamless hot standby When the Smart PCS does not receive power dispatch commands, it enters the hot standby state, consuming minimal power to remain ready for operation. The relay on the AC side remains connected, allowing the Smart PCS to respond promptly upon receiving power dispatch commands. This mode applies to scenarios where the system efficiency needs to be improved and the standby loss of the Smart PCS needs to be reduced, or scenarios where power is not allowed to be obtained from the power grid when the Smart PCS does not receive power dispatch commands. If the reactive power of the AC local port needs to be strictly controlled to 0, set **Hot standby reactive power compensation** to **Enable**. The system will automatically compensate for the reactive power of the Smart PCS AC port. The hot standby reactive power compensation function increases the system standby loss, but the loss is still much lower than that in **Zero-power operation** mode. **NOTE** In the GFM scenario (on-grid VSG), select any hot standby mode. Currently, the Smart PCS hot standby function is not supported due to the requirement for stable grid voltage and frequency.
Hot standby reactive power compensation under **The subarray hot standby mode**[1]	This parameter is displayed when **Standby Mode** is set to **Seamless hot standby**. The default value is **Disable**. If this parameter is set to **Enable**, the PCS enters the hot standby reactive power compensation mode.
Insulation resistance detection[1] under **Periodic insulation resistance test**	Enable or disable the insulation resistance detection function in the Smart PCS restart process based on the business plan. The system periodically triggers Smart PCS restart. During the Smart PCS startup, insulation resistance detection is performed to identify the risk of insulation resistance decrease in advance, ensuring ESS safety. If the insulation resistance decreases during this process, the system generates an alarm. If the devices in the array have an insulation monitoring device (IMD) or PID module, you can disable this function as required to prevent service interruptions caused by periodic Smart PCS restart.

 Copyright © Huawei Technologies Co., Ltd.

Parameter	Description
Detection start time[1] under **Periodic insulation resistance test**	Set the start time and interval for insulation resistance detection. After periodic insulation resistance detection is enabled, the system starts insulation resistance detection based on the Smart PCS restart process at the specified time on the next day and performs the detection periodically. To avoid affecting services, you are advised to set the detection start time to a time point when the service traffic is low, for example, 02:00.
Detection interval[1] under **Periodic insulation resistance test**	
[1]: This parameter is displayed in utility-scale scenarios.	

Table 6-3 Setting inverter parameters

Parameter	Description
Grid code	Set this parameter based on the grid code of the country or region where the device is used. For details about the grid codes of different regions, see the inverter user manual.
Working mode	Set the working mode of the inverter based on the actual scenario.
Microgrid compatibility	The default value is **Disable**. The recommended settings are as follows: – If **Working mode** is set to **VSG** for the inverter or **Scenario** is set to **On-grid**, set this parameter to **Disable**. – If **Working mode** is set to **PQ** for the inverter and the inverter works in a microgrid that uses a diesel generator or other voltage sources, set this parameter to **Enable**.

Table 6-4 Setting ESS parameters

Parameter	Description
Grid code	Set this parameter based on the grid code of the country or region where the devices are used. For details about the grid codes of different regions, see the inverter user manual.
Working mode	– If **Scenario** is set to **On-grid**, set this parameter to **PQ** or **VSG**. – If **Scenario** is set to **Off-grid**, set this parameter to **VSG**. – If **Scenario** is set to **On/Off-grid**, set this parameter to **PQ** or **VSG**. **NOTE** Ensure that the parameter settings for PCSs on the same DC bus are the same.

 Copyright © Huawei Technologies Co., Ltd.

Parameter	Description
Microgrid compatibility	The default value is **Disable**. The recommended settings are as follows: – If **Working mode** is set to **VSG** for the PCS or **Scenario** is set to **On-grid**, set this parameter to **Disable**. – If **Working mode** is set to **PQ** for the PCS and the PCS works in a microgrid that uses a diesel generator or other voltage sources, set this parameter to **Enable**. **NOTE** Ensure that the parameter settings for PCSs on the same DC bus are the same.
Auto switching between working modes	This parameter is applicable only in on-grid or on/off-grid mode. – **Disable**: On/Off-grid switching cannot be performed automatically. – **Enable**: On/Off-grid switching can be performed automatically and the PCS does not need to be shut down before the switching.
Charge/discharge rate under **Power Baseline**[1]	Set **Charge/discharge rate**. Other parameters under **Power Baseline** will be automatically generated.
PCS configuration coefficient[1]	Specifies the configuration ratio of the number of PCSs connected for each rack to the standard number of PCSs at the current charge/discharge rate. The default value is 1.0. PCS configuration coefficient = Number of PCSs connected for each rack/Standard number of PCSs at the current rate
Active power baseline (kW)[1] under **Power Baseline**	Set the lower limit of the maximum apparent power, which is also used as the baseline for active power scheduling. **Active power baseline** shall be smaller than **Apparent power baseline**.
Apparent power baseline (kVA)[1] under **Power Baseline**	Set the upper limit of the maximum active power, which is also used as the baseline for reactive power scheduling.
Maximum Overload Active Power (kW)[1][2] under **Power Baseline**	Specifies the maximum overload active power for grid forming.
Maximum Overload Apparent Power (kVA)[1][2] under **Power Baseline**	Specifies the maximum overload apparent power for grid forming.
Rated power reference[1] under **Power Baseline**	Set the rated capacity of the device.

 Copyright © Huawei Technologies Co., Ltd.

Parameter	Description
[1]: This parameter is displayed in utility-scale scenarios. [2]: In versions earlier than SmartLogger V300R024C10, this parameter can be set only for the LUNA2000-1.0MWH and LUNA2000-2.0MWH series in grid forming scenarios. If this parameter is set for other models or scenarios, the system displays a message indicating that the configuration fails. In SmartLogger V300R024C10 and later versions, set this parameter based on site requirements.	

- Load a license.

  Upload the license by clicking **Upload License**, select the corresponding device, and click **Load License**. For details, see **7.4.6 License Management**.

Step 3 Connect to power meters.

Figure 6-6 Setting meter parameters

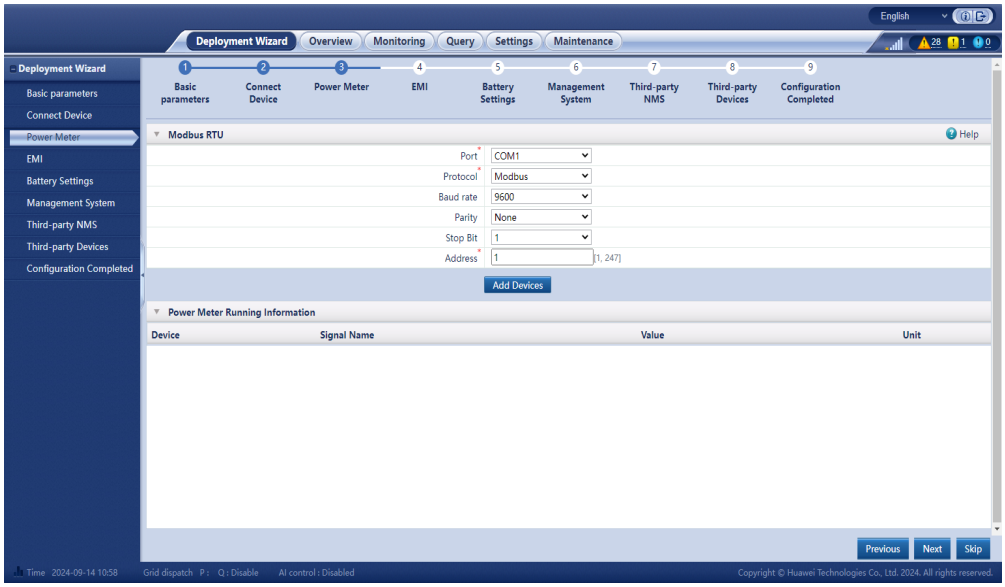

Table 6-5 Meter running information

Parameter	Description
Port	Meter COM port connected to the SmartLogger. For example, if the actual connected port of the meter is COM1, set this parameter to **COM1**.
Protocol	Set this parameter to the protocol type of the meter.
Baud rate	Protocol communication specifications of the meter. Set this parameter based on the site requirements. If you are unclear of it, contact the meter manufacturer.
Parity	
Stop Bit	

Copyright © Huawei Technologies Co., Ltd.

Parameter	Description
Address	Meter communications address, which is used to distinguish among multiple meters. For example, if the meter port COM1 is connected and **Address** is set to 2, the meter name is **Meter(COM1-2)**.

Table 6-6 Meter access settings

Parameter	Description
Device	Select the corresponding meter name to set the parameters of the meter. The meter name is related to the connected port. For example, if the meter port COM1 is connected and **Address** is set to 2, the meter name is **Meter(COM1-2)**.
Intelligent Power Meter Type	Select the meter model based on the actual situation of the connected meter. If the meter model is not in the available range, you can select **Other** to connect a custom meter.
Voltage change ratio	● Set this parameter to **1** if the meter uploads the primary value. ● Set this parameter based on the actual transformer ratio if the meter uploads the secondary value. **NOTE** If both the power meter and the SmartLogger support the settings of the voltage transformer ratio and current transformer ratio, you can only set them either on the power meter or the SmartLogger. You are advised to set these parameters on the power meter.
Current change ratio	
Meter usage	Meters include export+import meters, production meters, consumption meters, charger meters, and external production meters. ● **Export+import meter**: used for grid-connection point control. Each array allows only one export +import meter to be connected. ● **Production meter**: PV output meter. Multiple production meters can be connected. ● **Consumption meter**: load consumption meter. Multiple consumption meters can be connected. ● **Charger meter**: charger consumption meter. Multiple charger meters can be connected. ● **Ext. production meter**: third-party PV output meter. Multiple external production meters can be connected.

 Copyright © Huawei Technologies Co., Ltd.

Step 4 Connect to EMIs.

Figure 6-7 Setting EMI parameters

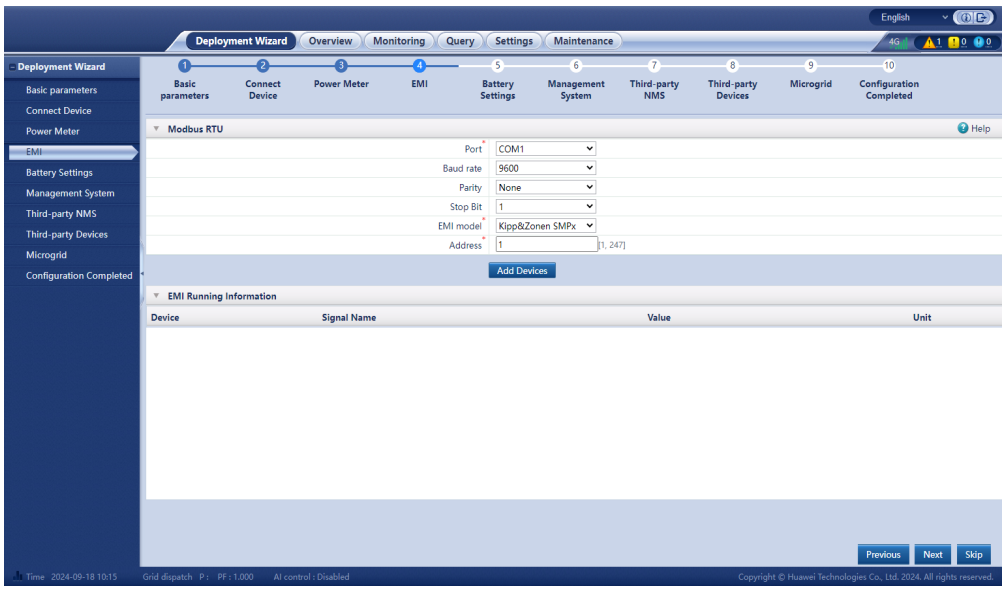

Step 5 Configure battery settings. This step is required only for the energy storage scenarios.

- Set the battery control working mode.

Figure 6-8 Working mode

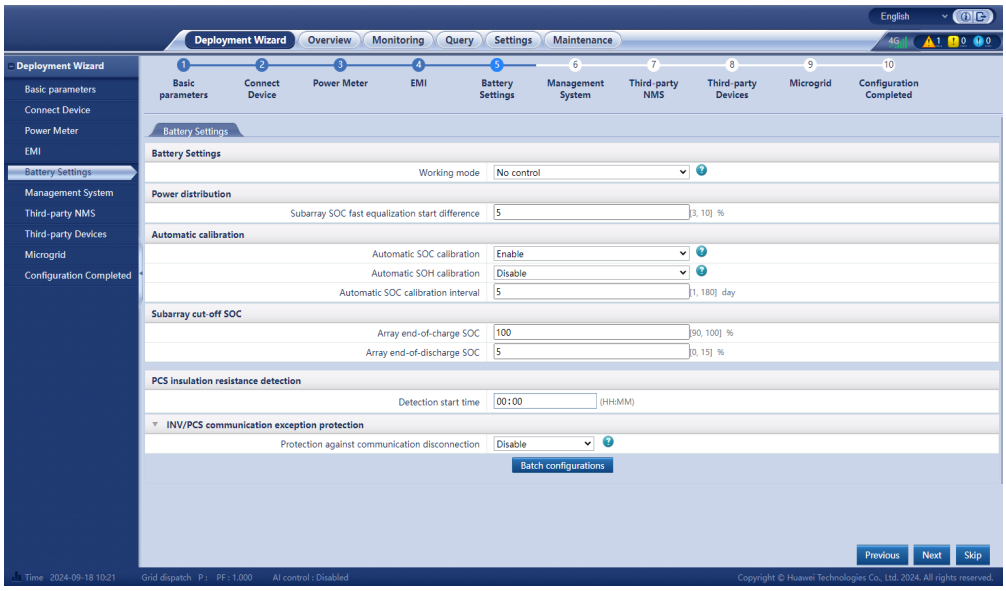

Table 6-7 Battery control working modes

Working Mode	Mode Description
No control	This mode is used only for commissioning. The SmartLogger does not control the power dispatch of the ESS.

Working Mode	Mode Description
Maximum self-consumption	– This mode applies to areas where the electricity price is high, or areas where the FIT subsidy is low or unavailable. The PV +ESS system generates sufficient PV power for loads and uses the surplus PV power to charge the ESS (if the PV power is insufficient for loads, the TOU mode is recommended). – PV power is preferentially supplied to loads, and the surplus power is used to charge the ESS. If the ESS is fully charged or is being charged at full power, the surplus power is fed to the grid. When PV power is insufficient or no PV power can be generated at night, the ESS discharges power to loads. This improves the self-consumption rate and energy self-sufficiency rate, and reduces electricity costs. The grid cannot charge the ESS but can supply power to loads. – The SmartLogger performs ESS scheduling based on the external scheduling power limit and the preceding policies.
Fully fed to grid	– This mode applies only to distributed ESS (residential) scenarios. – This mode maximizes the PV energy fed to the grid. When the PV output power in the daytime is greater than the maximum output capacity of the inverter, the surplus PV power is used to charge the ESS. When the PV output power is less than the maximum output capacity of the inverter, the ESS discharges energy to the inverter to maximize the energy fed from the inverter to the grid. The grid cannot charge the ESS. – The SmartLogger directly delivers the external scheduling power limit. **NOTE** **Fully fed to grid** is displayed only in distributed energy storage scenarios.

 Copyright © Huawei Technologies Co., Ltd.

Working Mode	Mode Description
TOU	– It is applicable to the PV+ESS system and ESS-only system where peak to valley electricity prices are different and power meters are available. – You can manually set the charge and discharge time segments. For example, if you set the low electricity price period at night as the charge time, the system charges the batteries at the maximum power during the charge time. If you set the high electricity price period as the discharge time, batteries can discharge only during the discharge time based on the actual load power, reducing electricity costs. – Click **Add** to set the charge and discharge time segments. A maximum of 14 time segments can be set. During the charge time, the grid can charge the batteries. During the discharge time, the batteries can supply power to the loads. In other time segments, the batteries do not discharge. The PV system and grid supply power to loads, and the PV system can charge the batteries. – In some countries, the grid is not allowed to charge batteries. In such case, this mode cannot be used. – The SmartLogger performs ESS scheduling based on the external scheduling power limit and the preceding policies.
TOU (fixed power)[1]	– This mode applies to the ESS-only system where electricity prices at peak and off-peak hours are different and power meters are unavailable. – You can manually set the charge and discharge time segments. For example, if you set the low electricity price period at night as the charge time, the system charges the batteries at the fixed power during the charge time. If you set the high electricity price period as the discharge time, batteries can discharge only during the discharge time at the fixed power, reducing electricity costs. – Click **Add** to set the charge and discharge time segments. A maximum of 14 time segments can be set. During the charge time, the grid can charge the batteries. During the discharge time, the batteries can supply power to the loads. In other time segments, the batteries do not discharge and are not charged. – In some countries, the grid is not allowed to charge batteries. In such case, this mode cannot be used. – The SmartLogger performs ESS scheduling based on the external scheduling power limit and the preceding policies. – Limited feed-in and TOU fixed power control cannot be used at the same time.

 Copyright © Huawei Technologies Co., Ltd.

Working Mode	Mode Description
Charge/Discharge based on grid dispatch	– This mode applies to scenarios where the northbound controller delivers active power scheduling commands. To use this function, set **Active power control mode** to **Remote communication scheduling**. – The purpose of scheduled discharge is to meet the active power scheduling target value at the grid access point. PV energy is preferred. If the generated PV energy is insufficient, the batteries discharge and the energy is fed to the grid based on the active power scheduling target value. If the generated PV energy is sufficient, the energy is fed to the grid based on the active power scheduling target value, and the surplus PV energy is used to charge the batteries. – The purpose of scheduled charge is to meet the active power scheduling target value at the grid access point. If the battery charge power is insufficient or the Smart PCS limits the power, the grid charges the batteries with the maximum capability. If the batteries are not fully charged when the scheduling target value is met, the PV power is used to charge the batteries.
Custom[2]	– This mode applies to utility-scale plant (with ESSs) scheduling scenarios. Customers can control the battery discharge power. – Non-discharge period: The batteries cannot discharge and can be charged based on the scheduling command. – Discharge period: If **Adaptive discharge power** is enabled, the control logic is the same as that for scheduled charge and discharge. The battery charge and discharge power is determined by the upper-layer scheduling command. If **Adaptive discharge power** is disabled, the battery discharge power is fixed to the reference value set by the customer. In this case, the upper-layer scheduling command controls only the PV inverters but not the batteries.
Note [1]: You can set this parameter in SmartLogger V300R023C00SPC150 and later versions. Note [2]: You can set this parameter in SmartLogger V300R023C00SPC120 and later versions.	

Table 6-8 Running parameters in each battery control working mode

Working Mode	Parameter	Description
Maximum self-consumption	**Active power threshold of grid during battery discharge**	Set the grid power threshold at the grid connection point for loads when the load power is greater than the PV power.

Working Mode	Parameter	Description
	Adjustment deadband	Set the precision of the grid power at the grid connection point. This parameter affects the power value range at the grid connection point. If the actual grid power threshold at the grid connection point is within this range, i.e. [Active power threshold of grid during battery discharge – Adjustment deadband, Maximum grid power during battery discharge + Adjustment deadband], the grid power requirement at the grid connection point is met.
TOU	**Preferred use of surplus PV power**	– **Charge**: When the PV power is greater than the load power, the surplus PV energy is used to charge the batteries. After the maximum charge power is reached or the batteries are fully charged, the surplus PV energy is fed to the grid. – **Fed to grid**: When the PV power is greater than the load power, the surplus PV energy is preferentially fed to the grid. When the maximum output power of the device is reached, the surplus energy is used to charge the batteries. This setting is applicable to the scenario where the FIT is higher than the electricity price. The grid cannot charge the batteries.
	Maximum power for charging batteries from grid	Set the maximum power at which the grid charges the ESS.
	Active power threshold of grid during battery discharge	Set the grid power threshold at the grid connection point for loads when the load power is greater than the PV power.
	Adjustment deadband	Set the precision of the grid power at the grid connection point. This parameter affects the power value range at the grid connection point. If the actual grid power threshold at the grid connection point is within this range, i.e. [Active power threshold of grid during battery discharge – Adjustment deadband, Maximum grid power during battery discharge + Adjustment deadband], the grid power requirement at the grid connection point is met.
	Start time	Set the start time and end time of charge and discharge. A maximum of 14 time segments can be set. You can set a cycle by week by clicking the buttons corresponding to **Mon.** through **Sun.** in the **Repeat** box. The buttons are blue by default, indicating being selected. After you click it, the button turns gray.
	End time	
	Charge/Discharge	
	Repeat	

Working Mode	Parameter	Description
TOU (fixed power)	**Start time**	Set the start time, end time, and power of charge and discharge. A maximum of 14 time segments can be set. You can set a cycle by week by clicking the buttons corresponding to **Mon.** through **Sun.** in the **Repeat** box. The buttons are blue by default, indicating being selected. After you click it, the button turns gray.
	End time	
	Charge/Discharge	
	Charge/Discharge power (kW)	
	Repeat	
Charge/ Discharge based on grid dispatch	**Array end-of-charge/discharge SOC derating**	The default value is **Disable**. The default value is recommended. Set this parameter as required. After this parameter is enabled, the SmartLogger will be derated according to a certain slope to prevent sudden power changes of arrays at the cut-off SOC point.
	Control charge/ discharge time window	The default value is **Disable**. The default value is recommended. Set this parameter as required. You can set the time segment for charge forbidden, discharge forbidden, charge, and discharge only after the control charge/discharge time window is enabled. This function applies only to PV+ESS collaborative control. – PV+ESS array: In PV+ESS collaborative control, the target value configured for the ESS charge/discharge time window takes precedence over the scheduling command. – PV+ESS array: In PV+ESS independent control, the scheduling command takes precedence over the target value configured for the ESS charge and discharge time window. – ESS-only array: The scheduling instruction takes precedence over the target value configured for the ESS charge and discharge time window.
	Start time	This parameter is displayed when **Control charge/ discharge time window** is set to **Enable**. Set the start time, end time, and power of charge forbidden, discharge forbidden, charge, and discharge. A maximum of 14 time segments can be set. You can set a cycle by week by clicking the buttons corresponding to **Mon.** through **Sun.** in the **Repeat** box. The buttons are blue by default, indicating being selected. After you click it, the button turns gray.
	End time	
	Charge/Discharge	
	Charge/Discharge power (kW)	
	Repeat	
Custom	**ESS discharge start time**	Set the start time of battery discharge. During the period from the start time to the end time, the batteries can be charged and can discharge. Beyond the period, the batteries cannot discharge and can only be charged.

 Copyright © Huawei Technologies Co., Ltd.

Working Mode	Parameter	Description
	ESS discharge end time	Set the end time of battery discharge. During the period from the start time to the end time, the batteries can be charged and can discharge. Beyond the period, the batteries cannot discharge and can only be charged.
	Adaptive discharge power	– **Enable**: PV power supply is preferred. If the PV power is insufficient, the batteries supply power to loads; if the PV power is sufficient, the system outputs at the target value and the surplus PV power is used to charge the batteries. – **Disable**: Batteries discharge based on the discharge power set on the GUI.
	Reference discharge power	Set the battery discharge power during the discharge period.

- Set the power allocation parameter. You can set this parameter in SmartLogger V300R023C10SPC550 and later versions.

Parameter	Description
Difference threshold for starting array SOC rapid equilibrium	The default value is **5%**. The default value is recommended. Set this parameter as required. When the SOC difference between racks in the array is greater than the value of **Difference threshold for starting array SOC rapid equilibrium**, the rapid equilibrium algorithm is enabled.

- Set the scheduling mode. The scheduling mode applies only to the C&I scenario and is displayed when the C&I ESS is connected. You can set this parameter in SmartLogger V300R023C10SPC550 and later versions.

Parameter	Description
Scheduling Mode	The default value is **Maximize energy**. – **Maximize energy**. If ESSs with different rates are used together in C&I scenarios, the power is allocated based on the minimum rate. – **Maximize power**. If ESSs with different rates are used together in C&I scenarios, the power is allocated based on the maximum power.

- Set the automatic calibration functions.

 Copyright © Huawei Technologies Co., Ltd.

Parameter	Description
Automatic SOC calibration	– If this parameter is set to **Enable**, automatic charge and discharge calibration is allowed for battery racks or battery cabinets. The ESS periodically calibrates the SOC rack by rack or cabinet by cabinet. During the calibration, the end-of-charge SOC and end-of-discharge SOC settings will be overridden so that the ESS can be fully charged or discharged. – If this parameter is set to **Disable**, automatic charge and discharge calibration is not allowed for battery racks or battery cabinets. **NOTE** – This function will cause SOC inconsistency between battery racks or cabinets, which is normal. – Before using this function, contact technical support engineers to evaluate the impact of SOC inconsistency between battery racks or cabinets during automatic calibration on the use of the system.
Automatic SOC calibration interval[1]	Set the automatic SOC calibration interval. This parameter is displayed when **Automatic SOC calibration** is set to **Enable**. If the battery SOC stays in the range of 10% to 90% most of the time, for example, in the microgrid scenario, the recommended online calibration interval is less than or equal to 30 days. If the battery SOC stays in the range of 40% to 60% most of the time, for example, in the frequency regulation scenario, the recommended online calibration interval is less than or equal to 180 days. If the battery SOC stays below 10% or at 100% most of the time, for example, in the peak shaving scenario, the recommended online calibration interval is less than or equal to 180 days.

Copyright © Huawei Technologies Co., Ltd.

Parameter	Description
Automatic SOH calibration	– If this parameter is set to **Enable**, the ESS periodically calibrates the SOH rack by rack or cabinet by cabinet. During the calibration, the end-of-charge SOC and end-of-discharge SOC settings will be overridden so that the ESS can be fully charged and discharged. Then, the battery capacity will be calculated. The charge and discharge response will be affected during the calibration. Suggestion: During SOH calibration, after the system is fully charged, maintain the charge command for 30 to 60 minutes. After the discharge is complete, maintain the discharge command for 30 to 60 minutes. – If this parameter is set to **Disable**, automatic SOH calibration is not allowed for battery racks or battery cabinets. **NOTE** – This function will cause SOC inconsistency between battery racks or cabinets, which is normal. – Before using this function, contact technical support engineers to evaluate the impact of SOC inconsistency between battery racks or cabinets during automatic calibration on the use of the system.
Note [1]: You can set this parameter in SmartLogger V300R023C00SPC172 and later versions.	

- Set the array end-of-charge SOC and end-of-discharge SOC. You can set these parameters in SmartLogger V300R023C10SPC500 and later versions.

Parameter	Description
Array end-of-charge SOC	The default value is 100%. The default value is recommended. Set this parameter as required.
Upper limit of SOC for array charge	The default value is 100%. The default value is recommended. Set this parameter as required.
SOC for array charge limit	The default value is 95%. The default value is recommended. Set this parameter as required.
SOC for array discharge limit	The default value is 10%. The default value is recommended. Set this parameter as required.
Lower limit of SOC for array discharge	The default value is 5%. The default value is recommended. Set this parameter as required.
Array end-of-discharge SOC	The default value is 5%. The default value is recommended. Set this parameter as required.

 Copyright © Huawei Technologies Co., Ltd.

NOTE

- When submitting the parameters, ensure that: **Array end-of-charge SOC ≥ Upper limit of SOC for array charge ≥ SOC for array charge limit** and **Array end-of-discharge SOC ≤ Lower limit of SOC for array discharge ≤ SOC for array discharge limit**
- **Upper limit of SOC for array charge**, **SOC for array charge limit**, **SOC for array discharge limit**, and **Lower limit of SOC for array discharge** are displayed only in utility-scale scenarios.

- Configure INV/PCS communication exception protection.

Parameter	Description
Protection against communication disconnection	Specifies whether to enable protection against communication disconnection.

- Set **PCS insulation resistance detection**.

Table 6-9 Setting parameters related to PCS insulation resistance detection

Parameter	Description
Detection start time[1]	Specifies the start time for the PCS insulation resistance detection function.
Note [1]: You can set this parameter in SmartLogger V300R023C00SPC153 and later versions.	

Step 6 Configure the management system.

Figure 6-9 Management system

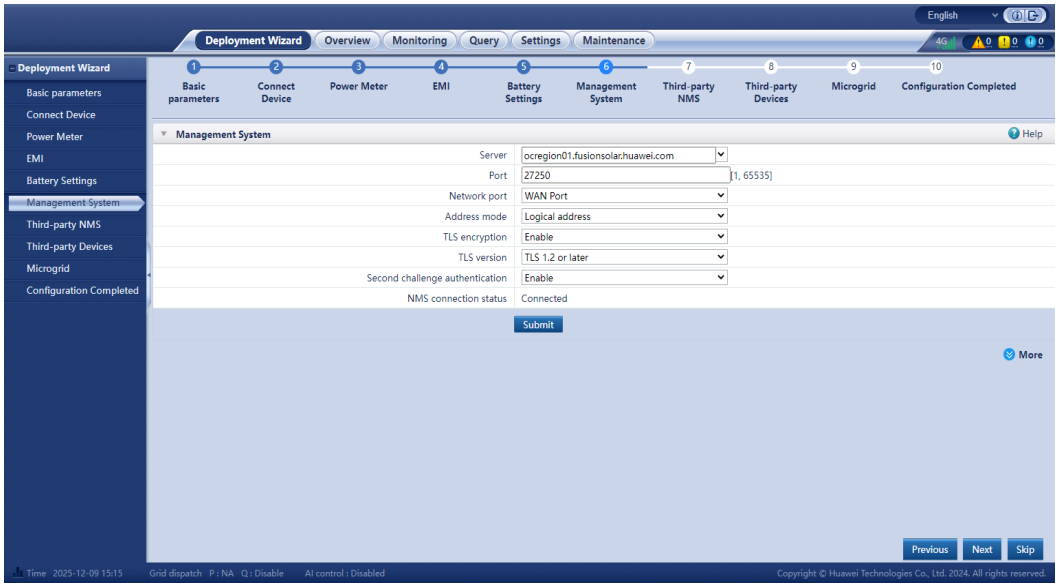

Step 7 For third-party NMS access, select a protocol based on the actual third-party NMS protocol.

- If the SmartLogger connects to a third-party management system over Modbus TCP, set Modbus TCP parameters and click **Next**.

Figure 6-10 Setting Modbus TCP parameters

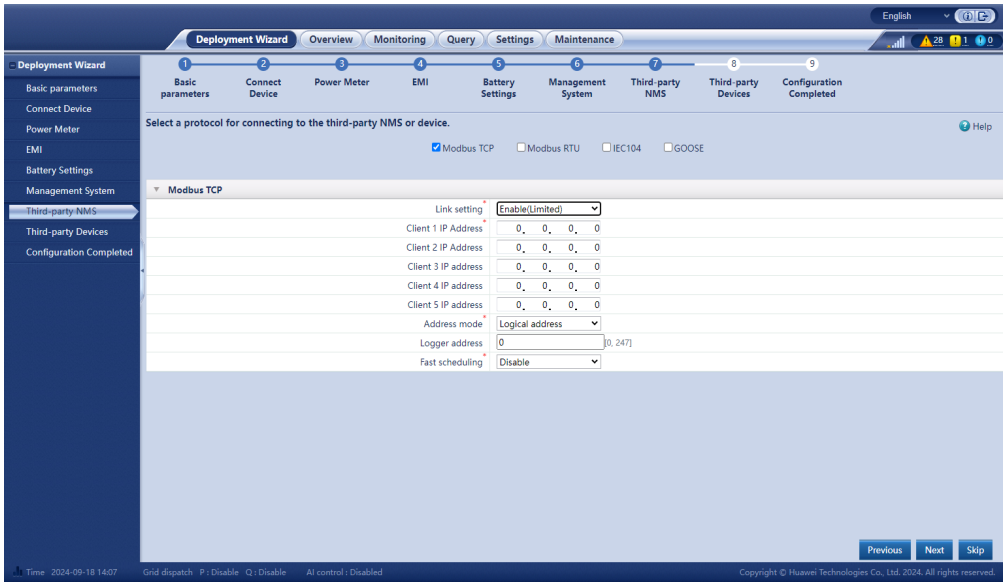

Parameter	Description	Remarks
Link setting	To use this function, set this parameter to **Enable(Limited)** or **Enable(Unlimited)**. – If this parameter is set to **Enable(Limited)**, the SmartLogger can connect to a maximum of five third-party management systems for which IP addresses have been set. – If this parameter is set to **Enable(Unlimited)**, the SmartLogger can connect to a maximum of five valid IP address (third-party management systems) in the same network segment.	-
Client N IP Address	Set this parameter based on the IP address of the third-party management system.	– This parameter is displayed when **Link setting** is set to **Enable(Limited)**. – N is 1, 2, 3, 4, or 5.

 Copyright © Huawei Technologies Co., Ltd.

Parameter	Description	Remarks
Address mode	The value can be **Communication address** or **Logical address**. If the communications address of the device connected to the SmartLogger is unique, you are advised to select **Communication address**. In other cases, you must select **Logical address**.	– This parameter is displayed when **Link setting** is set to **Enable(Limited)** or **Enable(Unlimited)**. – The fast scheduling function of the Modbus TCP interface is mutually exclusive with the GOOSE fast scheduling function. The fast scheduling function of only one protocol takes effect at a time.
Logger address	Set this parameter to the communications address of the SmartLogger.	
Fast scheduling	– Set this parameter to **Enable** to enable the fast scheduling function of the SmartLogger Modbus TCP interface. – Set this parameter to **Disable** to disable the fast scheduling function of the SmartLogger Modbus TCP interface.	

- If the SmartLogger connects to a third-party management system over Modbus RTU, set Modbus RTU parameters and click **Next**.

Figure 6-11 Setting Modbus RTU parameters

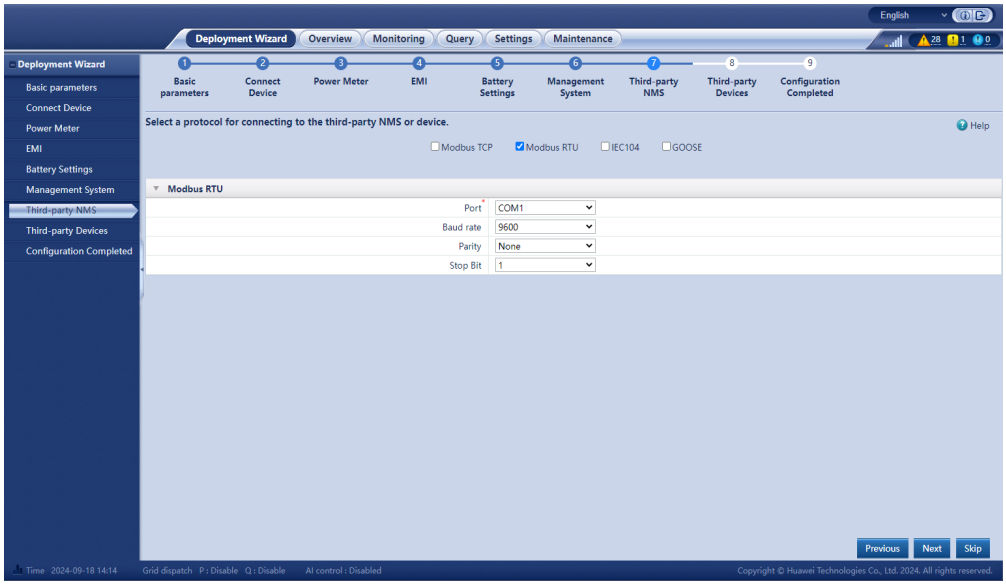

Parameter	Description
Port	Set the connected COM port based on the actual cable connections.
Baud rate	Set this parameter based on the baud rate of the connected device. The value can be **1200**, **2400**, **4800**, **9600**, **19200**, or **115200**.

Copyright © Huawei Technologies Co., Ltd.

Parameter	Description
Parity	Set this parameter based on the parity mode of the connected device. The value can be **None**, **Odd parity**, or **Even parity**.
Stop Bit	Set this parameter based on the stop bit of the connected device. The value can be **1** or **2**.

NOTE

If IEC 104 or GOOSE needs to be used to connect to a third-party management system, choose **Settings** > **Comm. Param.** > **IEC104 or GOOSE** after completing the deployment wizard.

Step 8 Connect to third-party devices.

Figure 6-12 Third-party devices

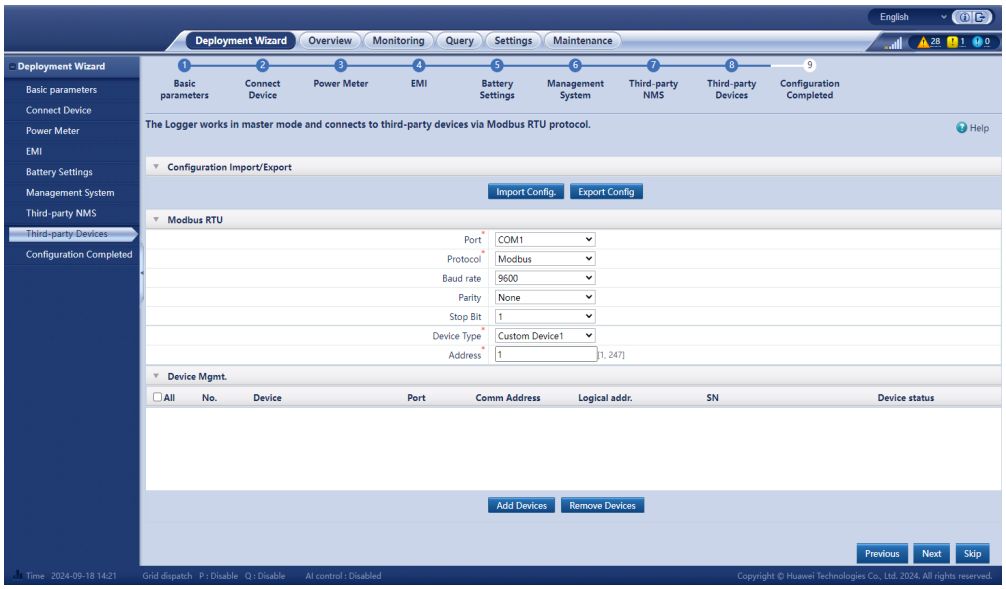

Step 9 If the microgrid control function is implemented by the SmartLogger, perform this step. Otherwise, skip this step.

1. Select **Yes** or **No** in the **Do you want to connect the relay protection device?** dialog box based on the actual situation. If a relay protection device is connected, set **Yes** and set the relay protection device parameters.

Table 6-10 Relay protection device parameters

Parameter	Description
Port	Set the COM port connected to **Relay protection device** based on the actual cable connections.

 Copyright © Huawei Technologies Co., Ltd.

Parameter	Description
Baud rate	Set the baud rate, parity, stop bit, and address of **Relay protection device** to be consistent with the communications parameters of the relay protection device.
Parity	
Stop Bit	
Address	
Device Type	Set this parameter to **Relay protection device**.
Device model	Set this parameter based on the actual model.

2. Set microgrid parameters.

Figure 6-13 Microgrid

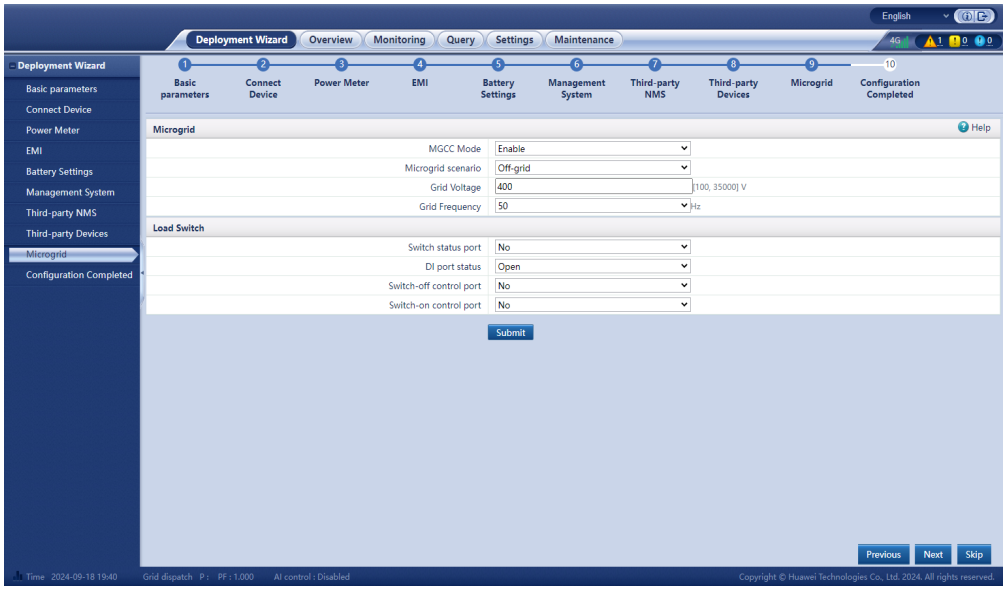

 Copyright © Huawei Technologies Co., Ltd.

Table 6-11 Microgrid parameters

Parameter	Description	Remarks
MGCC Mode under **Microgrid**	The default value is **Disable**. – **Enable**: The MGCC mode is enabled. – **Disable**: The MGCC mode is disabled.	When **MGCC Mode** is enabled, Modbus TCP, IEC 104, and GOOSE settings are disabled and the SmartLogger does not respond to scheduling commands from the EMS. (Set **Working mode** to **Charge/Discharge based on grid dispatch** on the **Battery Control** tab page and set **Active power control mode** to **Remote communication scheduling** on the **Power Adjustment** tab page.) Enable this function only when the EMS is not required. If you forcibly enable both the MGCC mode and the Modbus TCP, IEC 104, and GOOSE settings, the microgrid may be unstable.
Microgrid scenario under **Microgrid**	– **Off-grid**: In the off-grid scenario, set this parameter to **Off-grid**. – **On-grid/Off-grid (PQ/VSG)**: In the on/off-grid (PQ/VSG) scenario, set this parameter to **On-grid/Off-grid (PQ/VSG)**. – **On-grid/Off-grid (VSG)**: In the on/off-grid (VSG) scenario, set this parameter to **On-grid/Off-grid (VSG)** only after the relay protection device is successfully connected.	This parameter is displayed when **MGCC Mode** is set to **Enable**. – If **Microgrid scenario** is set to **Off-grid**, **Scenario** under **Arrays Operation Scenario** shall be set to **Off-grid**. – If **Microgrid scenario** is set to **On-grid/Off-grid (PQ/VSG)** or **On-grid/Off-grid (VSG)**, **Scenario** under **Arrays Operation Scenario** shall be set to **On/Off-grid**.

– If **Microgrid scenario** is set to **On-grid/Off-grid (PQ/VSG)**, refer to the following parameter description.

Parameter	Description
Switch status port under **On/Off-grid switch**	Set these parameters based on the actual cable connections. **DI port status** can be set to **Open** or **Close**. If the actual status of the on/off-grid switch is inconsistent with the displayed status, change the setting of **DI port status**.
DI port status under **On/Off-grid switch**	
Switch-off control port under **On/Off-grid switch**	Set the DO port for turning off the on/off-grid switch.
Switch-on control port under **On/Off-grid switch**	Set the DO port for turning on the on/off-grid switch.

 Copyright © Huawei Technologies Co., Ltd.

Parameter	Description
DI port under **Grid Failure Detection**	Set the DI port to which the grid failure detection device is connected and the DI port status.
DI port status under **Grid Failure Detection**	
On/Off-grid switching mode under **On/Off-grid switching**	▪ **No control**: All the operations involved in the on/off-grid switching are manually performed. If the customer needs to repair the equipment, you are advised to set this parameter to **No control**. ▪ **Automatic seamed switching**: The on/off-grid switching will be performed automatically based on the status of the mains power. When you set **On/Off-grid switching mode** to this mode, an immediate on/off-grid switching may be triggered, depending on the status of the mains power. ▪ **Manual seamed switching**: You need to manually turn on or off the on/off-grid switch at the grid connection point. ▪ **Seamless switching**: The on/off-grid switching will be performed automatically based on the status of the mains power in collaboration with the protective relay.

– If **Microgrid scenario** is set to **On-grid/Off-grid (VSG)**, refer to the following parameter description.

Parameter	Description
Genset start/stop control port under **Genset**	▪ If the genset is controlled by the SmartLogger, set the DO port that controls genset startup and shutdown based on the actual cable connections. ▪ If the genset is controlled by the ATS, set this parameter to **No**. It is recommended that the genset be controlled by the ATS.
Auto switching to on-grid under **Automatic Off-grid to On-grid Switching**	▪ **Enable**: Enable the function of automatic switching from off-grid to on-grid state. ▪ **Disable**: Disable the function of automatic switching from off-grid to on-grid.

– If **Microgrid scenario** is set to **Off-grid**, refer to the following parameter description.

 Copyright © Huawei Technologies Co., Ltd.

Parameter	Description
Switch status port under **Load Switch**	Set these parameters based on the actual cable connections. If you need to modify the parameters after the settings are submitted, the automatic control function of the load switch may fail. You can set **Automatic load connection/shedding** to **Enable** again or click **Function Reset** in **Automatic load control status** to restore the function. **DI port status** can be set to **Open** or **Close**. If the actual status of the load switch is inconsistent with **Status**, change the setting of **DI port status**.
DI port status under **Load Switch**	
Switch-off control port under **Load Switch**	Set the DO port for turning off the load switch.
Switch-on control port under **Load Switch**	Set the DO port for turning on the load switch.

– After the microgrid parameter settings are complete, click **Submit**.

Step 10 Set **Array startup/shutdown** based on the site requirements. The configuration is complete.

Figure 6-14 Completing the configuration

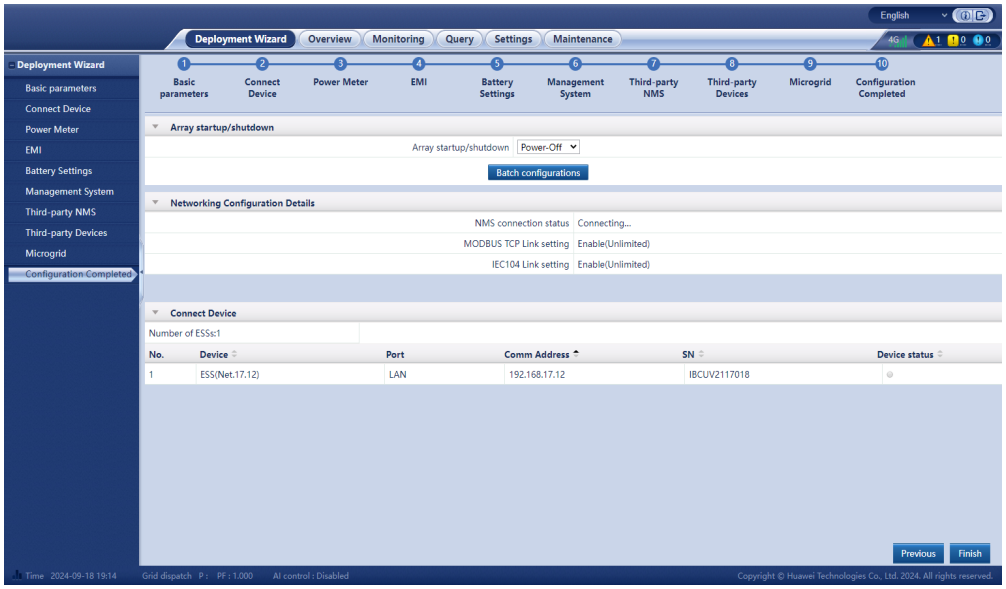

Step 11 (Optional) Perform wire sequence detection. This function applies only to the LUNA2000-(107-241) series C&I ESSs, and is displayed in multi-ESS scenarios. For details, see **7.4.15 Wire Sequence Detection**.

CAUTION

- In the off-grid scenario, ensure that the load has been disconnected and then click **Start**.
- In the on-grid scenario, cable sequence detection is required only in the zero feed-in scenario with three-phase imbalance phase-level power control.

Parameter	Description
Wire sequence detection status	Specifies the status of wire sequence detection. • Not detected • Testing • Detection failed: indicates that the wire sequence detection has failed. In this case, view the **Abnormal Cable Sequence** alarm and rectify the fault based on the handling suggestions. • If the wire sequence is consistent, no action is required. • If the wire sequence is inconsistent, rectify the cable connection. 1. View the phase sequence detection result. The phase sequences of multiple ESSs must be **Positive**. If not, rectify the cable connection. 2. If the phase sequences of multiple ESSs are **Positive**, check the phases. If the phase difference between ESSs is greater than 60°, rectify the cable connection.
Wire sequence detection time	Specifies the end time of wire sequence detection.
Wire sequence check progress	Specifies the progress of wire sequence detection.
Phase sequence	Check whether the phase sequence is **Positive** or **Negative**.
Phase	Check the phase detection result. The result ranges from 0° to 360°.

----End

Copyright © Huawei Technologies Co., Ltd.

6.3 Parameter Settings

NOTICE

- If the parameters listed in this section have been set in **Deployment Wizard**, ignore the corresponding settings.
- If the PV and energy storage plants do not contain certain devices, such as power meters, EMIs, IEC 103 devices, custom devices, and IEC 104 devices, ignore the corresponding settings.
- If you modify a parameter that may cause the device to restart, such as **Grid Code**, **Output mode**, or **Isolation settings**, wait about 20s after the device restarts and then set other parameters. Otherwise, the parameter setting may fail.

6.3.1 Setting User Parameters

Set user parameters and click **Submit**.

Figure 6-15 Setting user parameters

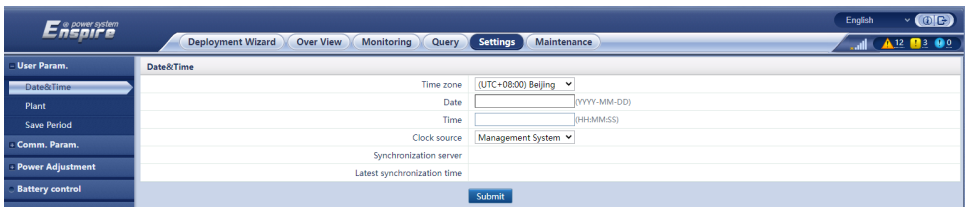

Date&Time

Parameter	Description
Local time zone	Select a time zone based on the region where the plant is located.
DST enable	Set this parameter as required. **NOTE** This parameter is unavailable for zones without DST.
Date	Set this parameter to the local date.
Time	Set this parameter to the local time.

Copyright © Huawei Technologies Co., Ltd.

Parameter	Description
Clock source	• Set this parameter as required. • The value can be **NTP**, **Management System**, **IEC104**, or **Modbus TCP**. If there is no management system, ignore the corresponding setting. **NOTE** The precision of each clock source (NTP, management system, IEC 104, and Modbus TCP) is 1s.

NOTICE

- After the date and time are set, the date and time of all the inverters connected to the SmartLogger are updated accordingly. Ensure that the settings are correct.
- Changing the date and time affects the recording of system energy yield and performance data. Do not change the time zone or system time unless necessary.

Plant

Parameter	Description
Plant name	Set this parameter as required. **NOTE** In the English half-width status, you cannot enter any of the following characters: <>:,`'?()#&\$|%+;~^"
Plant address	
Plant owner	
Plant owner address	
Country/Region	Select a country/region based on the region where the PV plant is located.

Revenue

NOTE

This parameter can be set only in the PV scenario.

Parameter	Description
Currency	Set this parameter as required. The value can be **EUR**, **GBP**, **USD**, **CNY**, or **JPY**.
Electricity price/kWh	Set this parameter to the local electricity price, which is used to calculate the converted revenue of the energy yield.

Copyright © Huawei Technologies Co., Ltd.

Parameter	Description
CO2 emission reduction coefficient	Set this parameter based on the local standard.

Save Period

Parameter	Description
Performance data save period	Set this parameter to the save period of performance data. After the setting, the data will be displayed accordingly on the performance data page.

6.3.2 Setting Parameters for Connecting to the Management System

Procedure

Step 1 Set up a network connection.

- **Method 1**: If the SmartLogger connects to the management system over a 4G/3G/2G network, choose **Settings > Comm. Param. > Wireless Network**, set mobile data parameters, and click **Submit**.

  NOTE

  Only the SmartLogger3000 with the 4G function supports wireless network parameter settings.

Parameter	Description
Monthly traffic package	Set this parameter based on the SIM card traffic package.
Network mode	Set this parameter based on the SIM card network mode.
APN mode	The default value is **Automatic**. Set this parameter to **Manual** if the dial-up connection cannot be set up in **Automatic** mode.
Authentication type	When **APN mode** is set to **Manual**, you need to set the parameters related to the SIM card. Obtain the information about the parameters from the SIM card operator.
APN	
APN dialup number	
APN user name	
APN user password	

- Method 2: If the SmartLogger connects to the management system over a wired network, choose **Settings > Comm. Param. > Wired Network**, set the parameters for wired network ports, and click **Submit**.

Parameter	Description	Remarks
WAN/LAN/SFP1/SFP2	The quantity of Ethernets for the SmartLogger is determined by the settings of WAN/LAN/SFP1/SFP2 network ports, and the network ports are allocated to corresponding Ethernets. Ethernet 1, Ethernet 3, and Ethernet 4 are northbound networks, and Ethernet 2 is the southbound network. Cable connections to physical ports on the SmartLogger must match the parameter settings to ensure normal southbound and northbound communication. The parameter settings are as follows: – Ethernet1/Ethernet2/Ethernet1/Ethernet1 – Ethernet2/Ethernet2/Ethernet1/Ethernet1 – Ethernet1/Ethernet1/Ethernet1/Ethernet1 – Ethernet1/Ethernet2/Ethernet2/Ethernet2 – Ethernet1/Ethernet2/Ethernet3/Ethernet3 – Ethernet1/Ethernet2/Ethernet3/Ethernet4	For example, if this parameter is set to **Ethernet1/Ethernet2/Ethernet3/Ethernet3**, the network is divided into three independent Ethernets: Ethernet 1, Ethernet 2, and Ethernet 3. Ethernet 1 and Ethernet 3 are northbound networks. Ethernet 1 corresponds to the WAN port, and Ethernet 3 corresponds to the SFP1 and SFP2 ports. They can connect to the management system and other northbound devices. Ethernet 2 is the southbound network and corresponds to the LAN port. It can connect to southbound devices such as the inverter, ESS, and PCS.
DHCP	The WAN port of the SmartLogger supports IP address obtaining using DHCP and automatic registration.	– Only Ethernet 1 supports DHCP. – After the SmartLogger connects to the SUN2000 app or FusionSolar app, choose **More** > **Settings** > **Comm. Param.** > **Ethernet** to access the Ethernet parameter setting screen and set **DHCP** to **Enable**.

Copyright © Huawei Technologies Co., Ltd.

Parameter	Description	Remarks
IP Address	Set this parameter based on the plant plan.	If the IP address is changed, use the new IP address to log in again.
Subnet mask	Set this parameter based on the actual subnet mask of the LAN where the SmartLogger is located.	-
Default gateway	Set this parameter based on the actual gateway of the LAN where the SmartLogger is located.	-
Primary DNS server	You can ignore this parameter if the SmartLogger connects to the LAN. Set this parameter to the IP address of the LAN router when the SmartLogger connects to the public network (for example, connecting to the FusionSolar SmartPVMS, email server, or third-party FTP server).	Only Ethernet 1 supports the DNS server.
Secondary DNS server	In normal cases, you can ignore this parameter. If the primary DNS server cannot resolve the domain name, the secondary DNS server is used.	

NOTE

The SmartLogger can connect to the Huawei management system only through Ethernet 1.

Step 2 Choose **Settings > Comm. Param. > Management System** and set management system parameters.

- **Method 1**: When the SmartLogger connects to a Huawei or third-party management system using the encrypted Modbus TCP protocol, set management system parameters and click **Submit**.

NOTE

After a Huawei NMS or a third-party NMS is connected to the SmartLogger in **Management System**, another third-party NMS can be connected through **Management System-1** to obtain data from the SmartLogger and configure the SmartLogger.

 Copyright © Huawei Technologies Co., Ltd.

Figure 6-16 Setting management system parameters

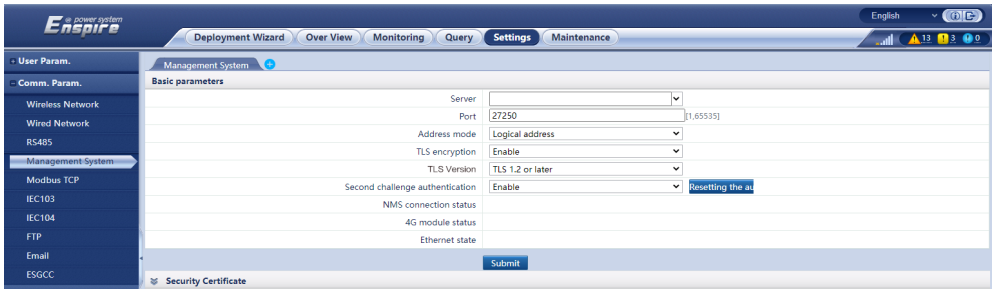

Table 6-12 Management system parameters

Parameter	Description
Server	Set this parameter to the IP address or domain name of the **Management System**.
Port	Set this parameter based on the connected **Management System**.
Address mode	The value can be **Communication address** or **Logical address**. If the communications address of the device connected to the SmartLogger is unique, you are advised to select **Communication address**. In other cases, you must select **Logical address**.
TLS encryption	Retain the default value **Enable**. **NOTE** If this parameter is set to **Disable**, data exchange between the SmartLogger and the management system will not be encrypted, which poses security risks.
TLS version	Set this parameter based on the connected **Management System**. – If the Huawei management system needs to be connected, select TLS1.2 or later. – If a third-party management system needs to be connected, you are advised to select TLS 1.2 or later based on the actual capability of the system.

Copyright © Huawei Technologies Co., Ltd.

Parameter	Description
Second challenge authentication	It is recommended that this parameter be set to **Enable**. – **Enable**: Users can perform configuration operations on the management system. – **Disable**: Users have only the permission to view data, and user data may be stolen. Exercise caution when using this function. When the Huawei management system is connected and this parameter is set to **Disable**, functions such as remote upgrade and log export will be unavailable.
Port mode	– Dual-port: When the SmartLogger communicates with the Huawei management system, the link for communicating with the northbound management system for file operations such as log export is not encrypted, saving traffic. – Single-port: This is the default mode of the device delivered. When the SmartLogger communicates with the Huawei management system, the link for communicating with the northbound management system for file operations such as log export is encrypted. If there are certification requirements, the single-port mode must be used.
Upload CA certificate file	Update the CA certificate file. A CA certificate is a root certificate obtained from a CA. It is also called a trust certificate and is used to verify the identity certificate of the peer end.
Upload local certificate file	Update the local certificate file. This is an identity certificate obtained from a CA. It is also called a device certificate and contains the public key of a device. During the establishment of a link with the peer end, the peer end uses its CA certificate to verify the validity and parses the certificate to obtain the public key of the local end.
Upload key file	Update the key file. The secret key file is a certificate private key and is used by itself. After a link is established with the peer end, the secret key file is used to encrypt and send data.
Enable key password	Whether to encrypt the key file. If this function is enabled, set **Key password** and **Confirm key password**.

 Copyright © Huawei Technologies Co., Ltd.

Figure 6-17 Setting management system-1 parameters

Table 6-13 Management system-1 parameters

Parameter	Description
Server	Set this parameter to the IP address or domain name of **Management System-1**.
Port	Set this parameter based on the connected **Management System-1**.
Address mode	The value can be **Communication address** or **Logical address**. If the communications address of the device connected to the SmartLogger is unique, you are advised to select **Communication address**. In other cases, you must select **Logical address**.
TLS encryption	Retain the default value **Enable**. **NOTE** If this parameter is set to **Disable**, data exchange between the SmartLogger and the management system will not be encrypted, which poses security risks.
TLS version	Set this parameter based on the connected **Management System-1**. TLS1.2 or a later version is recommended.
Remote permission	**Monitoring only**, **Management (permanent authorization)**, and **Management (temporary authorization)** are supported. When the remaining authorization time becomes 0, the system automatically switches to the monitoring-only mode.

- **Method 2**: When the SmartLogger connects to a third-party management system using the unencrypted Modbus TCP protocol, set Modbus TCP parameters and click **Submit**.

 Copyright © Huawei Technologies Co., Ltd.

Figure 6-18 Setting Modbus TCP parameters

IL03J00008

Parameter	Description
Link setting	Modbus TCP is a universal standard protocol used to connect to a third-party management system. Because there is no security authentication mechanism, data transmitted over this protocol is not encrypted. To reduce network security risks, the function of connecting to a third-party management system using Modbus TCP is disabled by default. This protocol can transmit the running data and control commands of plants, which may cause user data breach and control permission theft. Therefore, exercise caution when using this protocol. Users are liable for any loss caused by connecting to a third-party management system (non-secure protocol) using this protocol. Users are advised to take measures at the plant level to reduce security risks, or use Huawei management system to mitigate the risks. To use this function, set this parameter to **Enable(Limited)** or **Enable(Unlimited)**. – If this parameter is set to **Enable(Limited)**, the SmartLogger can connect to a maximum of five preset third-party management systems. – If this parameter is set to **Enable(Unlimited)**, the SmartLogger can connect to a maximum of five third-party management systems with a valid IP address.
Client N IP Address **NOTE** N is 1, 2, 3, 4, or 5.	If **Link setting** is set to **Enable(Limited)**, set this parameter based on the IP address of the third-party management system.
Address mode	The value can be **Communication address** or **Logical address**. If the communications address of the device connected to the SmartLogger is unique, you are advised to select **Communication address**. In other cases, you must select **Logical address**.

Copyright © Huawei Technologies Co., Ltd.

Parameter	Description
Logger address	Set this parameter to the communication address of the SmartLogger.
Fast scheduling	Specifies whether to enable fast scheduling.
Modbus TCP listening port	Specifies the Modbus TCP listening port.
Weak cipher suite	This function is used to ensure compatibility in encrypted communication between the SmartLogger and devices of earlier versions or certain management systems. If these devices or management systems use weak cipher suites, set this parameter to **Enable** to maintain normal communication. This parameter is displayed only in SmartLogger V300R024C00 and later versions.
PPC IP	Specifies the PPC IP address.
Communication abnormality detection time	Specifies the time for determining communication abnormalities. If the communication between the SmartLogger and the PPC is interrupted for a period longer than the set value, the communication is considered abnormal.
Protection Upon PPC Communication Error	If the communication fails for 30s or twice within 1 hour, the array will shut down. After the shutdown is triggered, the array cannot automatically start. You need to manually start the array.
Communication failure Zero-power detection time	Specifies the zero-power detection time upon communication failure. After **Communication failure Zero-power Control** is set to **Enable**, the interval between northbound dispatch commands is less than or equal to 0.1 times the value of this parameter (that is, parameter value x 0.1). For example, if this parameter is set to 3s, the interval between northbound dispatch commands is ≤ 300 ms.
Communication failure Zero-power Control	Specifies whether to enable zero-power control upon communication failure.

- **Method 3**: When the SmartLogger connects to a third-party management system over IEC 104, set IEC 104 parameters and click **Submit**.

 Copyright © Huawei Technologies Co., Ltd.

Figure 6-19 Setting IEC 104 parameters

IL04J00004

 Copyright © Huawei Technologies Co., Ltd.

Tab	Parameter	Description
Basic parameters	Link setting	IEC 104 is a universal standard protocol used to connect to a third-party management system. Because there is no security authentication mechanism, data transmitted over this protocol is not encrypted. To reduce network security risks, the function of connecting to a third-party management system using IEC 104 is disabled by default. This protocol can transmit the running data and control commands of plants, which may cause user data breach and control permission theft. Therefore, exercise caution when using this protocol. Users are liable for any loss caused by connecting to a third-party management system (non-secure protocol) using this protocol. Users are advised to take measures at the plant level to reduce security risks, or use Huawei management system to mitigate the risks. To use this function, set this parameter to **Enable(Limited)** or **Enable(Unlimited)**. – If this parameter is set to **Enable(Limited)**, the SmartLogger communicates with the management system of the specified IP address, that is, using a whitelist. – If this parameter is set to **Enable(Unlimited)**, the SmartLogger sets the segments and common forwarding tables of teleindication and telemetering through **Common Configuration**.
	Dead zone for telemetry push	When the telemetry data change exceeds this value, the change is reported.
	Common address	Set this parameter as required.
IEC104-N[1]	IEC104-N IP	If **Link setting** is set to **Enable(Limited)**, set this parameter based on the IP address of the third-party management system.

Tab	Parameter	Description
	Active/Standby mode	Active/Active: Both links can send data changes and response commands. Active/Standby: The active link sends data changes and response commands, and the standby link only transmits keepalive messages.
	Teleindication default segment	Set this parameter as required. **NOTE** After the IEC 104 configuration file exported from the SmartLogger and the IEC 104 information files of various device types provided together with the software version are correctly configured in a third-party management system, the third-party management system will be able to monitor devices connected to the SmartLogger over IEC 104.
	Telemetry default segment	
	Port number	
	Application layer address	
	Forwarding Table	
Common Configuration	Teleindication default segment	If **Link setting** is set to **Enable(Unlimited)**, set these parameters as required. **NOTE** After the IEC 104 configuration file exported from the SmartLogger and the IEC 104 information files of various device types provided together with the software version are correctly configured in a third-party management system, the third-party management system will be able to monitor devices connected to the SmartLogger over IEC 104.
	Telemetry default segment	
	Forwarding Table	
[1]: In SmartLogger V300R023C00SPC120 and later versions, IEC104-1 to IEC104-10 are displayed. In versions earlier than SmartLogger V300R023C00SPC120, IEC104-1 to IEC104-5 are displayed.		

NOTE

Choose **Settings** > **Other Parameters**, and set **IEC104 Push Data Period** to specify the interval for the SmartLogger to push data to a third-party management system over IEC104. If **IEC104 Push Data Period** is set to 0s, there is no limit on the interval at which the SmartLogger sends IEC104 data.

----End

6.3.3 Setting RS485 Communications Parameters

Set RS485 parameters and click **Submit**.

Figure 6-20 Setting RS485 parameters

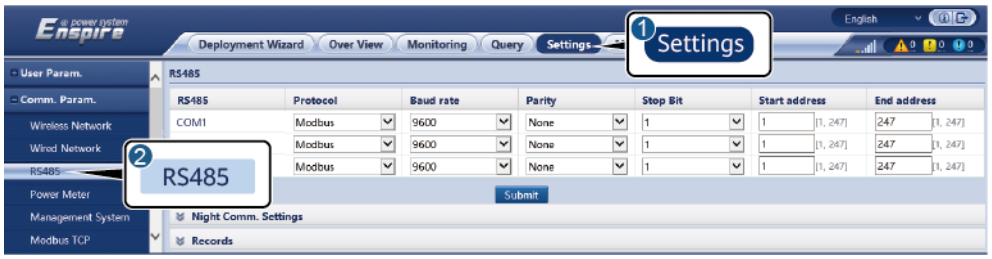

IL03J00010

NOTE

When the SmartModule is connected to the SmartLogger, the device name of the SmartModule is **Module(M1)**, and the corresponding port is **M1.COM**.

RS485

Protocol, **Baud rate**, **Parity**, and **Stop Bit** must be set to the same values for the devices connected to the same COM port.

Parameter	Description
Protocol	Set this parameter based on the protocol type of the connected device. The value can be **Modbus**, **IEC103**, **DL/T645**, **Modbus-Slave**, or **Modbus-Control**. **NOTE** • When the SmartLogger serves as a slave node to interconnect with a third-party device over Modbus-RTU, set **Protocol** to **Modbus-Slave**. • When the connected inverter performs rapid power grid scheduling using both MBUS and RS485, set **Protocol** to **Modbus-Control**.
Baud rate	Set this parameter based on the baud rate of the connected device. The value can be **1200**, **2400**, **4800**, **9600**, **19200**, or **115200**.
Parity	Set this parameter based on the parity mode of the connected device. The value can be **None**, **Odd parity**, or **Even parity**.
Stop Bit	Set this parameter based on the stop bit of the connected device. The value can be **1** or **2**.

 Copyright © Huawei Technologies Co., Ltd.

Parameter	Description
Start address	1 ≤ Start address ≤ Communication address of the connected device ≤ End address ≤ 247 The address segments of COM ports can overlap. **NOTE** The start and end addresses have no impact on the devices that have been connected.
End address	

Night Communication Settings

If device information query is not required at night, enable **Night silent**.

Parameter	Description
Night silent	Specifies whether the night silent mode is enabled.
Enter time	Specifies the time for entering the night silent mode.
Exit time	Specifies the time for exiting the night silent mode.
Wakeup period	Specifies the wakeup period for the night silent mode.

6.3.4 Setting SPPC Communications Parameters

NOTE

The parameters can be configured only for V300R023C10 and later versions.

Choose **Settings > Comm. Param. > SPPC**, set the SPPC parameters, and click **Submit**.

Parameter		Description
SPPC	SPPC1 IP	IP address of the SPPC. If the SPPC address is not configured, the SmartLogger obtains the SPPC address through the automatic discovery process. You can set the IP address to **0.0.0.0** and the port number to **65535** to manually start automatic device discovery.
	SPPC1 port number	Port number used by the SmartLogger to connect to the SPPC.
	SPPC1 connection status	Status of the SPPC connection.

 Copyright © Huawei Technologies Co., Ltd.

Parameter		Description
	SPPC2 IP	IP address of the SPPC. If the SPPC address is not configured, the SmartLogger obtains the SPPC address through the automatic discovery process. You can set the IP address to **0.0.0.0** and the port number to **65535** to manually start automatic device discovery.
	SPPC2 port number	Port number used by the SmartLogger to connect to the SPPC.
	SPPC2 connection status	Status of the SPPC connection.
	SmartLogger status	Specifies the SmartLogger status.
Security Certificate	Upload CA certificate file	Update the CA certificate file. A CA certificate is a root certificate obtained from a CA. It is also called a trust certificate and is used to verify the identity certificate of the peer end.
	Upload local certificate file	Update the local certificate file. This is an identity certificate obtained from a CA. It is also called a device certificate and contains the public key of a device. During the establishment of a link with the peer end, the peer end uses its CA certificate to verify the validity and parses the certificate to obtain the public key of the local end.
	Upload key file	Update the key file. The secret key file is a certificate private key and is used by itself. After a link is established with the peer end, the secret key file is used to encrypt and send data.
	Enable key password	Whether to encrypt the key file. If this function is enabled, set **Key password** and **Confirm key password**.

6.3.5 Setting Parameters for the Slave SmartLogger

Step 1 Log in to the slave SmartLogger WebUI, set Modbus TCP parameters, and click **Submit**.

 Copyright © Huawei Technologies Co., Ltd.

Figure 6-21 Setting Modbus TCP parameters

IL03J00008

Parameter	Description
Link setting	Set this parameter to **Enable(Limited)**.
Client N IP Address	Set this parameter to the IP address of the master SmartLogger.
Address mode	The value can be **Comm. Address** or **Logical address**. If the communications address of the device connected to the SmartLogger is unique, you are advised to select **Comm. Address**. In other cases, you must select **Logical address**.
Logger address	Set this parameter to the communications address of the slave SmartLogger.
Fast scheduling[1]	The default value is **Enable**. ● Set this parameter to **Enable** to enable the fast scheduling function of the SmartLogger Modbus TCP interface. ● Set this parameter to **Disable** to disable the fast scheduling function of the SmartLogger Modbus TCP interface.
LAN port	Specifies whether to enable the SmartLogger LAN port.
Modbus TCP listening port	The default value is **502**. The value can be set to **1502** based on site requirements.
Note [1]: This parameter can be set only for V300R023C00 and later versions. The fast scheduling function of the Modbus TCP interface is mutually exclusive with the GOOSE fast scheduling function. The fast scheduling function of only one protocol takes effect at a time.	

Step 2 Log in to the WebUI of the master SmartLogger, set access parameters for the slave SmartLogger, and click **Add Devices**.

 Copyright © Huawei Technologies Co., Ltd.

Figure 6-22 Setting access parameters

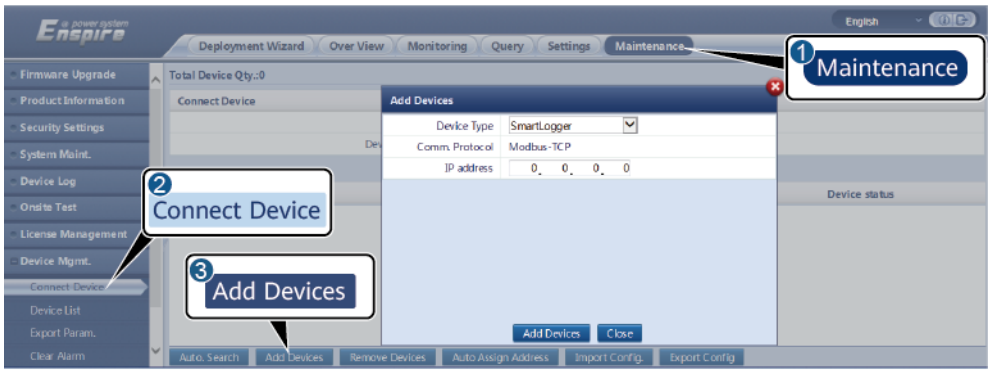

IL03J00011

Parameter	Description
Device Type	Set this parameter to **SmartLogger**.
IP address	Set this parameter to the IP address of the slave SmartLogger.

----End

6.3.6 Setting HTTPS Parameters

Choose **Settings** > **Comm. Param.** > **HTTPS**, set HTTPS parameters, and click **Submit**.

Parameter	Description
HTTPS listening port	The default value is **443**. The value can be set to **1443** based on site requirements.

6.3.7 Setting GOOSE Communications Parameters

NOTE

- The GOOSE parameters can be configured only for V300R023C00 and later versions.
- By default, VLAN ID 1 is used as the network management VLAN in the bridge. Therefore, do not use VLAN ID 1 when the third-party EMS communicates with the SmartLogger.

Choose **Settings** > **Comm. Param.** > **GOOSE**, set the GOOSE parameters, and click **Submit**.

 Copyright © Huawei Technologies Co., Ltd.

Basic Parameters

Parameter	Description	Remarks
Connection	The default value is **Disable**. ● Set this parameter to **Enable** to enable GOOSE communication for the SmartLogger. ● Set this parameter to **Disable** to disable GOOSE communication for the SmartLogger.	● Set this parameter to **Enable** if the plant-level controller delivers a black start command through GOOSE to implement synchronous black start of multiple arrays. ● Set this parameter to **Enable** if the plant-level controller delivers a power control command through GOOSE to implement fast scheduling.
Data reporting	The default value is **Disable**. ● Set this parameter to **Enable** to enable the function of reporting GOOSE messages from the SmartLogger to the peer device. ● Set this parameter to **Disable** to disable the function of reporting GOOSE messages from the SmartLogger to the peer device.	This parameter is displayed when **Connection** is set to **Enable**.

 Copyright © Huawei Technologies Co., Ltd.

Parameter	Description	Remarks
Data receiving	The default value is **Disable**. ● Set this parameter to **Enable** to enable the GOOSE message receiving function of the SmartLogger. ● Set this parameter to **Disable** to disable the GOOSE message receiving function of the SmartLogger.	
Network port	This parameter specifies the type of the network port used by the SmartLogger to send and receive GOOSE messages. Set this parameter based on the actual networking scenario.	
Enable second port[1]	The default value is **Disable**. When the SmartLogger is used in the scenario with dual control networks, set this parameter to **Enable**.	
Fast scheduling[2]	The default value is **Disable**. ● Set this parameter to **Enable** to enable the fast scheduling function of the SmartLogger GOOSE interface. ● Set this parameter to **Disable** to disable the fast scheduling function of the SmartLogger GOOSE interface.	
Note [1]: To enable the second port, you need to configure an isolation group for the switch network port connected to the GOOSE controller. Note [2]: The GOOSE fast scheduling function is mutually exclusive with the Modbus TCP fast scheduling function. The fast scheduling function of only one protocol takes effect at a time.		

Configuration File Import/Export

- This parameter is displayed when **Connection** is set to **Enable**.
- You can contact the vendor to obtain the CID files of the peer controller connected to the SmartLogger. Compress the CID files of the peer controller into a .zip configuration package, and click **Import Config**. Import the configuration package. After the configuration is parsed successfully, the **Device name**, **Controller type**, **Controller name**, **Configuration status**, and **Last import time** are displayed. For details about GOOSE interconnection and interfaces, see the GOOSE interface description file in the release documentation.

If the configuration file is imported and parsed successfully, the configuration status is **Configured**. If the configuration file import fails, contact the vendor of the peer controller to obtain the correct CID file.

Message Indicating Failed Configuration	Description	Suggestion
Import failed. The configuration file is incomplete.	The CID file of the local or peer device is missing.	Contact the vendor of the peer controller to obtain the correct CID file.
Import failed. The configuration file is not for this device.	The file does not match the vendor or the device type.	
Import failed. Unable to parse the configuration file.	The CID file format is incorrect. Parsing failed or no matching signal is found.	

- Click **Export Config.** to obtain the CID file of the current SmartLogger version. If the CID configuration files of the peer controller have been imported successfully, the CID configuration files of the peer controller are exported at the same time.

6.3.8 Setting MBUS Parameters

6.3.8.1 Setting Parameters for a Built-in MBUS Module

Procedure

1. Set access parameters.

Figure 6-23 Setting parameters for a built-in MBUS module

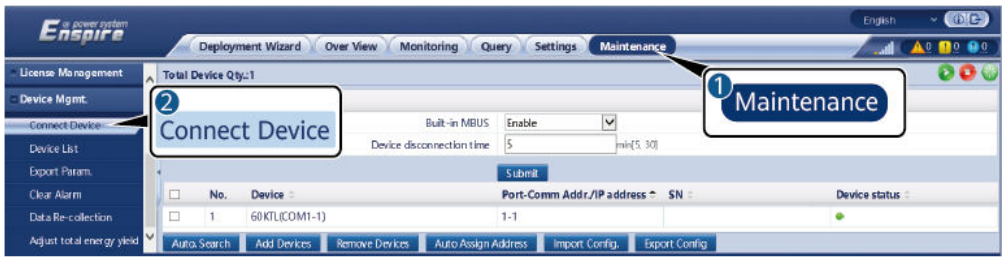

IL03J00012

 Copyright © Huawei Technologies Co., Ltd.

Parameter	Description
Built-in MBUS	• When the SmartLogger communicates with the inverter using a built-in MBUS module, set this parameter to **Enable**. • When the SmartLogger communicates with the inverter and third-party device only over RS485, set this parameter to **Disable**.
Device disconnection time	Specifies the device disconnection time.

2. Set networking parameters.

Figure 6-24 Setting built-in MBUS networking

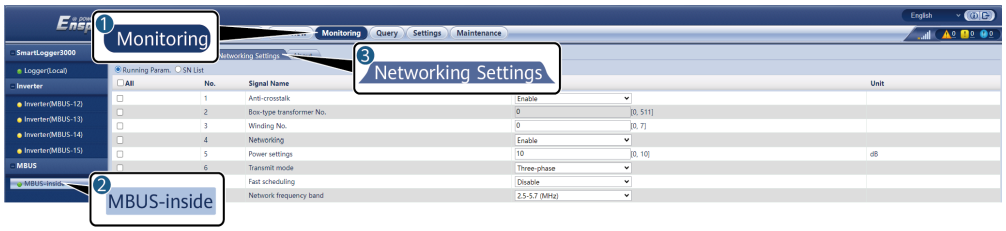

Tab	Parameter	Description
Running Param.	**Anti-crosstalk**	Set this parameter to **Enable**. When the transformer station number and winding number of the inverter are the same as those of the MBUS, or the inverter SN is in the SN list, the inverter can connect to the SmartLogger over an MBUS network.
	Network frequency band	Set this parameter based on site requirements.
	Box-type transformer No.	Set this parameter based on the number of the transformer station connected to the SmartLogger.
	Winding No.	In the scenario of multi-split transformer stations, set this parameter based on the winding number of the transformer station connected to the SmartLogger.
	Networking	• When the SmartLogger communicates with the inverter over MBUS, set **Networking** to **Enable**. • When the SmartLogger communicates with the inverter only over RS485, set **Networking** to **Disable**.

Copyright © Huawei Technologies Co., Ltd.

Tab	Parameter	Description
	Power settings	This parameter is used to adjust the transmit power of MBUS signals. A larger value indicates higher transmit power and better networking capabilities. The default value is **8** (**NA** is displayed). You can set this parameter based on actual requirements.
	Transmit mode[1]	• Set this parameter to **Single-phase** in the rapid power grid scheduling scenario and to **Three-phase** in other scenarios. • If this parameter is set to **Single-phase**, ensure that the MBUS three-phase AC power cable connection of the SmartLogger is the same as that of the inverter. Otherwise, the inverter communication may be disconnected or some commands may be lost.
	Fast control frame type[2]	• This parameter specifies the frame type used by the MBUS module for rapid power grid scheduling. • The MBUS module adaptively selects **FC frame** or **Common frame**.
	Fast scheduling[3]	Set this parameter based on the actual networking. • If the fast scheduling function is required, set this parameter to **Enable**. • If the fast scheduling function is not required, set this parameter to **Disable**.
	SNID	Indicates the SN ID of a device on the network. This parameter is used to distinguish between the CCO and the inverter during communication. In normal cases, the system automatically resolves conflicts caused by duplicate SN IDs. There is no need to change the SN ID of the CCO unless otherwise specified.

Copyright © Huawei Technologies Co., Ltd.

Tab	Parameter	Description
SN List	-	• Maintain the inverter SN list. • You can click **Synchronize** to synchronize the transformer station number and winding number of the MBUS module to the inverters in the SN list. **NOTICE** • If MBUS networking is used, an SN list, that is, a whitelist, must be set for inverters. • The inverter whitelist can be set one by one or in batches. • One by one: Click **Add**, enter the SN of the corresponding inverter, and click **Submit**. • In batches: Method 1: If the whitelist is set for the first time, click **Template**, download the .zip package to the local PC, decompress it, and enter the SNs of multiple inverters in the .csv file by referring to the format of the template. Click **Import** to import the modified .csv file, and then click **Submit**. Method 2: If the whitelist is not set for the first time, click **Export**, download the .zip package to the local PC, decompress it, and add the SNs of multiple inverters to the .csv file based on the format of the exported .csv file. Click **Import** to import the modified .csv file, and then click **Submit**.
Note [1]: This parameter can be set only in SmartMBUS V100R001C00SPC212 and later versions. Note [2]: This parameter can be set only in SmartMBUS V100R001C00SPC212 and later versions, but has been deleted in SmartMBUS V100R001C00SPC220 and later versions. Note [3]: This parameter can be set only in SmartMBUS V100R001C00SPC220 and later versions.		

6.3.8.2 Setting Parameters for an External MBUS Module

Set parameters for an external MBUS module based on the model of the connected device. The models of external MBUS modules include SmartMBUS CCO01A and SmartMBUS CCO01B.

6.3.8.2.1 Setting SmartMBUS CCO01A Parameters

Procedure

1. Set access parameters.
   - **Method 1**: Click **Auto. Search** to connect to the MBUS module.
   - **Method 2**: Click **Add Devices**, set access parameters, and click **Add Devices**.

Figure 6-25 Setting access parameters for an external MBUS module

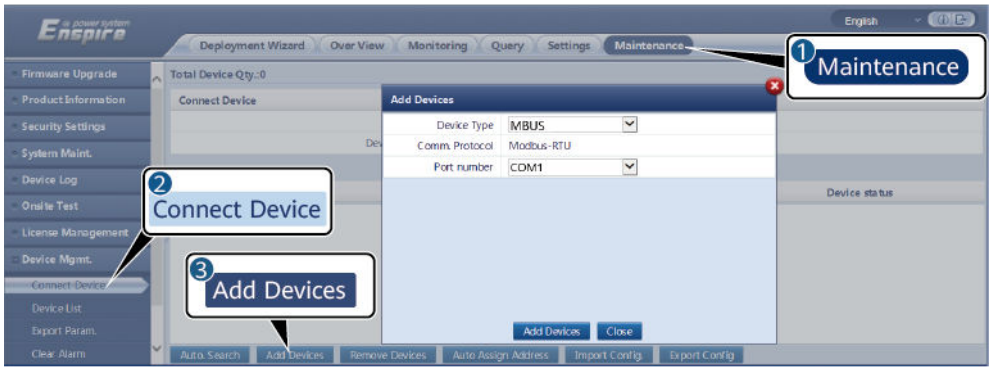

IL03J00013

Parameter	Description
Device Type	Set this parameter to **MBUS**.
Port number	Set this parameter to the COM port connected to the MBUS module.

2. Set networking parameters.

Figure 6-26 Setting external MBUS networking

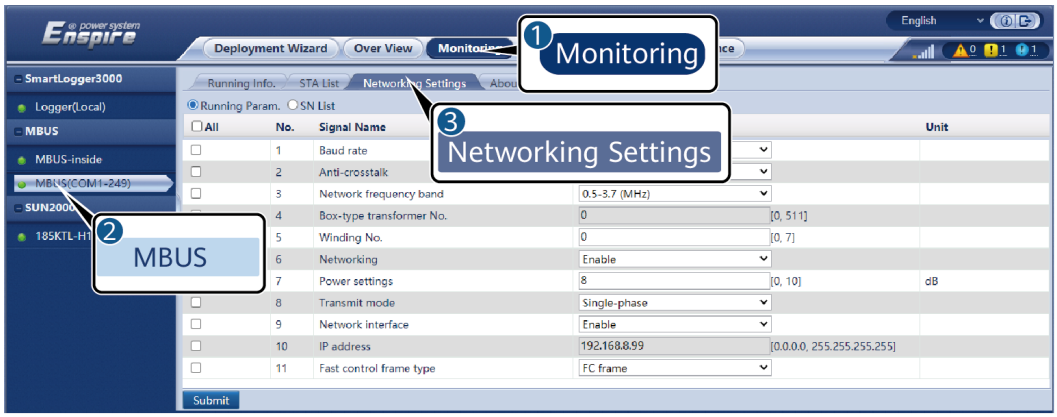

Copyright © Huawei Technologies Co., Ltd.

Tab	Parameter	Description
Running Param.	**Baud rate**	Retain the default value **115200** to achieve better communication performance.
	Anti-crosstalk	Set this parameter to **Enable**. When the transformer station number and winding number of the inverter are the same as those of the MBUS, or the inverter SN is in the SN list, the inverter can connect to the SmartLogger over an MBUS network.
	Network frequency band	Set this parameter based on site requirements.
	Box-type transformer No.	Set this parameter based on the number of the transformer station connected to the SmartLogger.
	Winding No.	In the scenario of multi-split transformer stations, set this parameter based on the winding number of the transformer station connected to the SmartLogger.
	Networking	● When the SmartLogger communicates with the inverter over MBUS, set **Networking** to **Enable**. ● When the SmartLogger communicates with the inverter only over RS485, set **Networking** to **Disable**.
	Power settings	This parameter is used to adjust the transmit power of MBUS signals. A larger value indicates higher transmit power and better networking capabilities. The default value is **8** (**NA** is displayed). You can set this parameter based on actual requirements.
	Transmit mode[1]	● Set this parameter to **Single-phase** in the rapid power grid scheduling scenario and to **Three-phase** in other scenarios. ● If this parameter is set to **Single-phase**, ensure that the MBUS three-phase AC power cable connection of the SmartLogger is the same as that of the inverter. Otherwise, the inverter communication may be disconnected or some commands may be lost.
	Network interface[1]	● This parameter is used to enable communication between the MBUS module and the SmartLogger network interface. ● The default value is **Disable**. Set this parameter to **Enable** only in the power grid fast scheduling scenario. Ensure that the LAN interface on the SmartLogger or SmartModule is connected to the network interface on the MBUS module.

 Copyright © Huawei Technologies Co., Ltd.

Tab	Parameter	Description
	IP address[1]	IP address of the MBUS module. The default value is **192.168.8.249**. Change the value only when an IP address conflict occurs.
	Fast control frame type[2]	• This parameter specifies the frame type used by the MBUS module for rapid power grid scheduling. • The MBUS module adaptively selects **FC frame** or **Common frame**.
	Fast scheduling[3]	Set this parameter based on the actual networking. • If the fast scheduling function is required, set this parameter to **Enable**. • If the fast scheduling function is not required, set this parameter to **Disable**.
SN List	-	• Maintain the inverter SN list. • You can click **Synchronize** to synchronize the transformer station number and winding number of the MBUS module to the inverters in the SN list. **NOTICE** • If MBUS networking is used, an SN list, that is, a whitelist, must be set for inverters. • The inverter whitelist can be set one by one or in batches. • One by one: Click **Add**, enter the SN of the corresponding inverter, and click **Submit**. • In batches: Method 1: If the whitelist is set for the first time, click **Template**, download the .zip package to the local PC, decompress it, and enter the SNs of multiple inverters in the .csv file by referring to the format of the template. Click **Import** to import the modified .csv file, and then click **Submit**. Method 2: If the whitelist is not set for the first time, click **Export**, download the .zip package to the local PC, decompress it, and add the SNs of multiple inverters to the .csv file based on the format of the exported .csv file. Click **Import** to import the modified .csv file, and then click **Submit**.
Note [1]: This parameter can be set only in SmartMBUS V100R001C00SPC212 and later versions. Note [2]: This parameter can be set only in SmartMBUS V100R001C00SPC212 and later versions, but has been deleted in SmartMBUS V100R001C00SPC220 and later versions. Note [3]: This parameter can be set only in SmartMBUS V100R001C00SPC220 and later versions.		

 Copyright © Huawei Technologies Co., Ltd.

6.3.8.2.2 Setting SmartMBUS CCO01B Parameters

The SmartLogger3000 software versions of V300R023C00SPC110 and later support FE access.

Procedure

1. (Optional) If the SmartMBUS CCO01B is installed in the STS, set **Built-in MBUS** to **Disable** on the SmartLogger3000, as shown in **Figure 6-27**. If the SACU model is SmartACU2000D-D-02 or SmartACU2000D-D-03, remove the power supply to disable the CCO module installed in the SACU to prevent communications interference between the two CCO modules. If the preceding conditions are not met, skip this step.

   Figure 6-27 Setting parameters for a built-in MBUS module

2. Set access parameters.
   - If FE communication is selected for the SmartMBUS CCO01B, the SmartMBUS CCO01B is automatically added.
   - If RS485 communication is selected for the SmartMBUS CCO01B, you have two methods to add a device.

     Method 1: Click **Auto. Search** to connect to the MBUS module.

     Method 2: Click **Add Devices**, set access parameters, and click **Add Devices**.

Figure 6-28 Setting access parameters for an external MBUS module

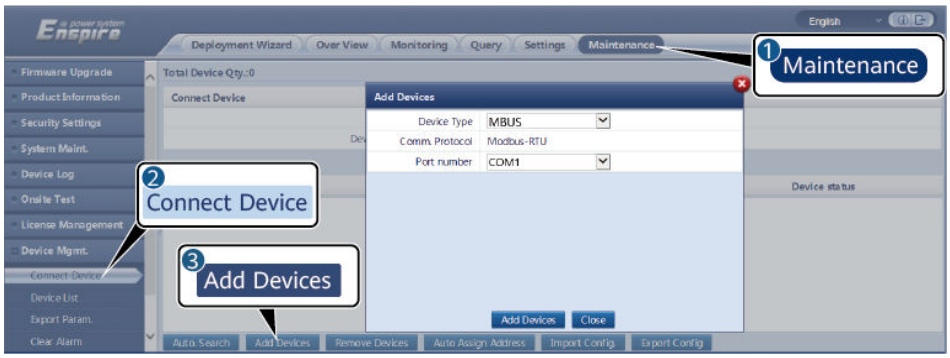

IL03J00013

Parameter	Description
Device Type	Set this parameter to **MBUS**.
Port number	Set this parameter to the COM port connected to the MBUS module.

3. Set networking parameters.

Table 6-14 Setting parameters for external MBUS networking

Tab	Parameter	Description
Running Param.	**Baud rate**	Retain the default value **115200** to achieve better communication performance. This parameter is set only when the SmartMBUS CCO communication mode is set to RS485.
	Anti-crosstalk	Set this parameter to **Enable**. When the transformer station number and winding number of the inverter are the same as those of the MBUS, or the inverter SN is in the SN list, the inverter can connect to the SmartLogger over an MBUS network.
	Box-type transformer No.	Set this parameter based on the number of the transformer station connected to the SmartLogger.
	Winding No.	In the scenario of multi-split transformer stations, set this parameter based on the winding number of the transformer station connected to the SmartLogger.

Copyright © Huawei Technologies Co., Ltd.

Tab	Parameter	Description
	Networking	● When the SmartLogger communicates with the inverter over MBUS, set **Networking** to **Enable**. ● When the SmartLogger communicates with the inverter only over RS485, set **Networking** to **Disable**.
	Power settings	This parameter is used to adjust the transmit power of MBUS signals. A larger value indicates higher transmit power and better networking capabilities. The default value is **8** (**NA** is displayed). You can set this parameter based on actual requirements.
	Fast scheduling	Set this parameter based on the actual networking. ● If the fast scheduling function is required, set this parameter to **Enable**. ● If the fast scheduling function is not required, set this parameter to **Disable**.
	Network frequency band	Retain the default value. If you have any questions, contact the supplier or technical support.
	SNID	Indicates the SN ID of a device on the network. This parameter is used to distinguish between the CCO and the inverter during communication. In normal cases, the system automatically resolves conflicts caused by duplicate SN IDs. There is no need to change the SN ID of the CCO unless otherwise specified.

 Copyright © Huawei Technologies Co., Ltd.

Tab	Parameter	Description
SN List	-	• Maintain the inverter SN list. • You can click **Synchronize** to synchronize the transformer station number and winding number of the MBUS module to the inverters in the SN list. **NOTICE** • If MBUS networking is used, an SN list, that is, a whitelist, must be set for inverters. • The inverter whitelist can be set one by one or in batches. • One by one: Click **Add**, enter the SN of the corresponding inverter, and click **Submit**. • In batches: Method 1: If the whitelist is set for the first time, click **Template**, download the .zip package to the local PC, decompress it, and enter the SNs of multiple inverters in the .csv file by referring to the format of the template. Click **Import** to import the modified .csv file, and then click **Submit**. Method 2: If the whitelist is not set for the first time, click **Export**, download the .zip package to the local PC, decompress it, and add the SNs of multiple inverters to the .csv file based on the format of the exported .csv file. Click **Import** to import the modified .csv file, and then click **Submit**.

6.3.9 Setting Inverter Parameters

Procedure

Step 1 Choose **Maintenance** > **Connect Device** and set access parameters.

- **Method 1**: Click **Auto. Search** to connect to the inverter.
- **Method 2**: Click **Add Devices**, set access parameters, and click **Add Devices**.

Figure 6-29 Setting access parameters

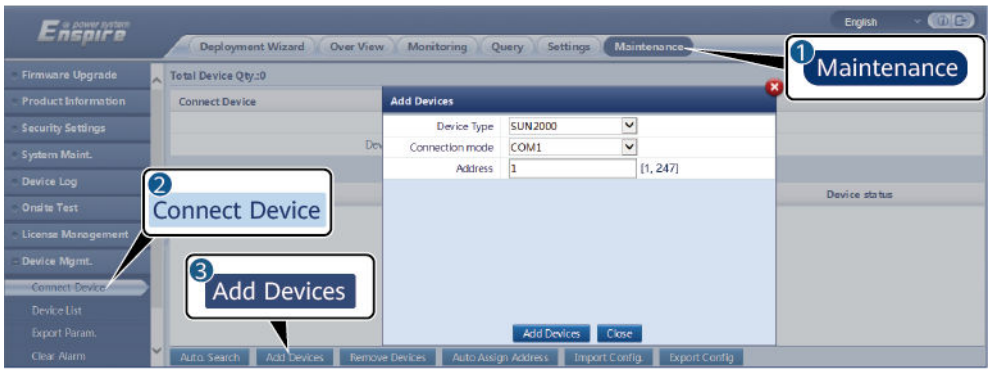

Parameter	Description
Device Type	Specifies the inverter type.
Connection mode	• If the inverter uses the MBUS for communication, set this parameter to **MBUS**. • If the inverter uses RS485 for communication, set this parameter to the COM port connected to the inverter.
Address	Set this parameter to the communications address of the inverter.

Step 2 Choose **Monitoring** > **Inverter** > **Running Param.**, set running parameters, and click **Submit**.

NOTICE

Before setting the running parameters of the inverter, ensure that the DC side of the inverter is energized.

----End

6.3.9.1 Running Parameters

Grid Parameters

Parameter	Description
Grid Code	Set this parameter based on the grid code of the country or region where the inverter is used and the inverter application scenario.

 Copyright © Huawei Technologies Co., Ltd.

Parameter	Description
Area code	This parameter applies only to China. This parameter applies only to China. In addition to the national power grid standards, various regions have different requirements for inverter grid connection. You need to set the area code of the corresponding region. The default value is N/A. Currently, only the area codes of Yunnan and Xizang are valid.
Isolation settings	Set the working mode of the inverter based on the grounding status at DC side and the connection to the power grid.
Output mode	Specifies whether the inverter output has a neutral wire based on the application scenario.
V-phase grounded	The default value is **Disable**. Set this parameter to **Enable** when the phase wire from the transformer to the inverter is grounded.
PQ mode	If this parameter is set to **PQ mode 1**, the maximum AC output power equals the maximum apparent power. If this parameter is set to **PQ mode 2**, the maximum AC output power equals the rated output power.
Automatically start upon grid recovery	Specifies whether to allow the inverter to automatically start after the power grid recovers. ● **Enable**: The inverter automatically starts when the power grid recovers from a fault or outage. ● **Disable**: The inverter does not automatically start when the power grid recovers from a fault or outage. The inverter starts only after a startup command is delivered.
Grid connected recovery time from grid faults (s)	Specifies the time after which the inverter begins restarting after the power grid recovers.
Grid reconnection voltage upper limit (V)	The standards of certain countries and regions require that after the inverter shuts down for protection due to a fault, if the power grid voltage is higher than **Grid reconnection voltage upper limit**, the inverter is not allowed to reconnect to the grid.
Grid reconnection voltage lower limit (V)	The standards of certain countries and regions require that after the inverter shuts down for protection due to a fault, if the power grid voltage is lower than **Grid reconnection voltage lower limit**, the inverter is not allowed to reconnect to the grid.
Grid reconnection frequency upper limit (Hz)	The standards of certain countries and regions require that after the inverter shuts down for protection due to a fault, if the power grid frequency is higher than **Grid reconnection frequency upper limit**, the inverter is not allowed to reconnect to the grid.
Grid reconnection frequency lower limit (Hz)	The standards of certain countries and regions require that after the inverter shuts down for protection due to a fault, if the power grid frequency is lower than **Grid reconnection frequency lower limit**, the inverter is not allowed to reconnect to the grid.

 Copyright © Huawei Technologies Co., Ltd.

Parameter	Description
Reactive power compensation (cosϕ-P) trigger voltage (%)	Specifies the voltage threshold for triggering reactive power compensation based on the cosϕ-P curve.
Reactive power compensation (cosϕ-P) exit voltage (%)	Specifies the voltage threshold for exiting reactive power compensation based on the cosϕ-P curve.
Soft start time after grid failure	Specifies the time for the power to gradually increase when the inverter restarts after the power grid recovers.

Protection Parameters

Parameter	Description
Insulation resistance protection (MΩ)	To ensure device safety, the inverter detects the insulation resistance of the input side to the ground when it starts a self-check. If the detected value is less than the preset value, the inverter does not connect to the grid. ● For the 600 V system, the value range is [0.02, 1.5]. ● For the 1100 V system, the value range is [0.033, 1.5]. ● For the 1500 V system, the value range is [0.05, 1.5].
Voltage unbalance protection threshold (%)	Specifies the inverter protection threshold when the power grid voltage is unbalanced.
Phase protection point (°)	The Japanese standard requires that during passive islanding detection, protection should be triggered if an abrupt voltage phase change is detected.
Phase angle offset protection	The standards of certain countries and regions require that the inverter needs to be protected when the phase angle offset of the power grid three phases exceeds a certain value.
10-min overvoltage protection threshold (V)	Specifies the 10-minute overvoltage protection threshold. ● For residential single-phase inverters that support off-grid operation, the value range is [0, 1250] V. ● For other inverters, the value range is [800, 1000] V.
10-min overvoltage protection duration (ms)	Specifies the 10-minute overvoltage protection duration.
Level-N OV protection (V)	Specifies the level-N grid overvoltage protection threshold.
Level-N OV protection time (ms)	Specifies the level-N grid overvoltage protection duration.
Level-N UV protection (V)	Specifies the level-N grid undervoltage protection threshold.

 Copyright © Huawei Technologies Co., Ltd.

Parameter	Description
Level-N UV protection time (ms)	Specifies the level-N grid undervoltage protection duration.
Level-N OF protection (Hz)	Specifies the level-N grid overfrequency protection threshold.
Level-N OF protection time (ms)	Specifies the level-N grid overfrequency protection duration.
Level-N UF protection (Hz)	Specifies the level-N grid underfrequency protection threshold.
Level-N UF protection time (ms)	Specifies the level-N grid underfrequency protection duration.

NOTE

N is 1, 2, 3, 4, 5, or 6.

Feature Parameters

Parameter	Description	Remarks
MPPT multi-peak scanning	When the inverter is used in scenarios where PV strings are obviously shaded, set this parameter to **Enable**, and then the inverter will perform global MPPT scanning at regular intervals to locate the maximum power.	-
MPPT multi-peak scan interval (min)	Specifies the MPPT scanning interval.	This parameter is displayed when **MPPT multi-peak scanning** is set to **Enable**.
RCD enhancement	RCD refers to the residual current of the inverter to the ground. To ensure device and personal safety, RCD should be limited to the specified value in the standard. If an AC switch with a residual current detection function is installed outside the inverter, set this function to **Enable** to reduce the residual current generated when the inverter is running, thereby preventing the AC switch from misoperations.	-
Night-time reactive power output	In some specific application scenarios, a power grid company requires that the inverter can perform reactive power compensation at night to ensure that the power factor of the local power grid meets requirements.	This parameter is displayed when **Isolation** is set to **Input ungrounded (with TF)**.

 Copyright © Huawei Technologies Co., Ltd.

Parameter	Description	Remarks
PID protection at night	When the inverter outputs reactive power at night and this parameter is set to **Enable**, the inverter will shut down automatically if it detects abnormal status of the PID voltage compensation.	• When **Offset mode** is set to **Disable**, you need to set **PID protection at night** to **Disable**. • When **IMD access** is set to **Enable**, you need to set **PID protection at night** to **Disable**.
Strong adaptability	If the power grid short-circuit capacity or plant installed capacity is less than 3, the power grid quality will be affected if the power grid impedance is too high, which may cause the inverter to malfunction. In this case, if the inverter is required to work properly, set this parameter to **Enable**.	-
Power quality optimization mode	If this parameter is set to **Enable**, the inverter output current harmonics will be optimized.	-
PV module type	This parameter can be set to different types of PV modules, especially concentrating PV (CPV) modules. You can configure CPV modules to determine the shutdown duration of the inverter. If the CPV modules are shaded, the power drops drastically to 0 and the inverter shuts down. The energy yield would be affected since it takes too long for the power to resume and inverter to restart. The parameter does not need to be set for crystalline silicon and thin film PV modules.	• If this parameter is set to **Crystalline silicon** or **Film**, the inverter automatically detects the power of PV modules when they are shaded and shuts down if the power is too low. • When CPV modules are used: – If this parameter is set to **CPV 1**, the inverter can quickly restart in 60 minutes if the input power of PV modules drops drastically due to shading. – If this parameter is set to **CPV 2**, the inverter can quickly restart in 10 minutes if the input power of PV modules drops drastically due to shading.
PID compensation direction	When the external PID module compensates the PID voltage for the PV system, set **PID compensation direction** to the actual compensation direction of the PID module so that the inverter can output reactive power at night.	**PID compensation direction** must be consistent with **PV module compensation voltage direction** of the PID module.
Built-in PID running mode	Specifies the operation mode of the inverter built-in PID.	-

 Copyright © Huawei Technologies Co., Ltd.

Parameter	Description	Remarks
PID nighttime off-grid repair	Specifies whether to enable the PID nighttime off-grid repair.	If **PID running mode** is not set to **Disable**, the parameter can be set.
PID daytime off-grid repair	Specifies whether to enable the PID daytime off-grid repair.	
String connection mode	Specifies the connection mode of PV strings.	• When PV strings connect to the inverter separately (All PV strings separated), there is no need to set this parameter. The inverter can automatically detect the connection mode of the PV strings. • When the inverter is connected to all parallel PV strings (connected to each other in parallel outside the inverter), set this parameter to **All PV strings connected**.
Automatic OFF due to communication interrupted	The standards of certain countries and regions require that the inverter must shut down after the communication is interrupted for a certain time.	If **Automatic OFF due to communication interrupted** is set to **Enable** and the inverter communication is interrupted for a specified time (set by **Communication interruption duration**), the inverter will automatically shut down.
Communication interruption duration (min)	Specifies the duration for determining communication interruption. Used for automatic shutdown for protection in case of communication interruption.	-
Automatic ON due to communication resumed	If this parameter is set to **Enable**, the inverter automatically starts after communication recovers. If this parameter is set to **Disable**, the inverter needs to be started manually after communication recovers.	This parameter is displayed when **Shutdown on communication failure** is set to **Enable**.
Soft start/boot time (s)	Specifies the duration for the power to gradually increase when the inverter starts.	-
Shutdown gradient (%/s)	Specifies the power change speed when the inverter shuts down.	-
AFCI	The North American standard requires that the inverter should have DC arc detection function.	-

 Copyright © Huawei Technologies Co., Ltd.

Parameter	Description	Remarks
AFCI detection adaptive mode	Adjusts the sensitivity of arc detection.	This parameter is displayed only when **AFCI** is set to **Enable**.
AFCI self-test	Send the AFCI self-check command manually.	-
Current error during the scan (A)	To prevent inaccurate I-V curve scanning of PV strings caused by sunlight change, the current change of PV strings that operate properly should be monitored. When the current exceeds the specified value, it is determined that the sunlight changes. Perform I-V curve scanning again.	-
OVGR associated shutdown	If this parameter is set to **Enable**, the inverter shuts down after receiving the OVGR signal. If this parameter is set to **Disable**, the inverter does not shut down after receiving the OVGR signal.	This parameter is displayed if the Japanese grid code is selected.
Dry contact function	Identifies the dry contact signals from the SmartLogger.	Set this parameter to **OVGR** for OVGR signals, and set it to **NC** for other signals. This parameter is displayed if the Japanese grid code is selected.
Commanded shutdown hold after power recovery	The standards of certain countries and regions require that if the inverter is shut down after receiving a command and powered on again after power recovers, it should still be in commanded shutdown state.	-
Night-time hibernation	The inverter monitors PV strings at night. If this parameter is set to **Enable**, the monitoring function of the inverter will hibernate at night to reduce power consumption.	-
MBUS communication	For inverters that support RS485 communication and MBUS communication, you are advised to set this parameter to **Disable** when RS485 communication is used to reduce power consumption.	-
RS485-2 communication	If this parameter is set to **Enable**, the RS485-2 port can be used. If the port is not used, you are advised to set this parameter to **Disable** to reduce power consumption.	-

 Copyright © Huawei Technologies Co., Ltd.

Parameter	Description	Remarks
Delay upgrade	This parameter is mainly used in the upgrade scenarios where the PV power supply is disconnected at night due to no sunlight or unstable at dawn or dusk due to poor sunlight.	After the inverter starts to upgrade, if **Delay upgrade** is set to **Enable**, the upgrade package is loaded first. After the PV power supply recovers and the activation conditions are met, the inverter automatically activates the upgrade.
String monitor	The inverter monitors PV strings in real time. If any PV string is abnormal (such as the PV string is shaded or the electric energy yield decreases), the inverter generates an alarm to remind maintenance personnel to maintain the PV string in a timely manner.	If PV strings are often shaded, you are advised to set **String monitor** to **Disable** to prevent false alarms.
String detection reference asymmetric coefficient	Specifies the threshold for determining PV string exception. The false alarms caused by fixed shadow shading can be controlled by changing this parameter.	This parameter is displayed when **String monitor** is set to **Enable**.
String detection starting power percentage (%)	Specifies the threshold for starting PV string exception detection. The false alarms caused by fixed shadow shading can be controlled by changing this parameter.	
OFF at 0% power limit	If this parameter is set to **Enable**, the inverter shuts down after receiving the 0% power limit command. If this parameter is set to **Disable**, the inverter does not shut down after receiving the 0% power limit command.	-
Maximum apparent power (kVA)	Specifies the output upper threshold for the maximum apparent power to adapt to the capacity requirements of standard and customized inverters.	If the maximum active power equals the value of Smax_limit, this parameter is not displayed.
Maximum active power (kW)	Specifies the output upper threshold for the maximum active power to adapt to different market requirements.	For 1000 V inverters, this parameter is configurable only for the SUN2000-25KTL-US, and the maximum value is 27.5 kW.
Tracker controller	Selects a controller vendor.	-

 Copyright © Huawei Technologies Co., Ltd.

Parameter	Description	Remarks
Adjust total energy yield (kWh)	Specifies the initial energy yield of the inverter. This parameter is used in inverter replacement scenarios. Set the initial energy yield of the new inverter to the total energy yield of the old inverter to ensure continuous statistics of cumulative energy yield.	-
Duration for determining short-time grid disconnection (ms)	The standards of certain countries and regions require that the inverter should not disconnect from the power grid if the power grid experiences a short-time failure. After the fault is rectified, the inverter output power needs to be quickly restored.	-
Buzzer	If this parameter is set to **Enable**, the buzzer sounds when the DC input cable is incorrectly connected. If this parameter is set to **Disable**, the buzzer does not sound when the DC input cable is incorrectly connected.	-
LVRT	LVRT is short for low voltage ride-through. When the grid voltage is abnormally low for a short time, the inverter cannot disconnect from the power grid immediately and has to work for some time.	-
Threshold for triggering LVRT (V)	Specifies the threshold for triggering LVRT. The threshold settings should meet the local grid standard.	This parameter is displayed when **LVRT** is set to **Enable**.
LVRT compensation power factor of reactive power in positive sequence	During LVRT, the inverter needs to generate positive-sequence reactive power to support the power grid. This parameter is used to set the positive-sequence reactive power generated by the inverter. For example, if you set **LVRT compensation power factor of reactive power in positive sequence** to **2**, the increment of positive-sequence reactive current generated by the inverter is 20% of the rated current when the AC voltage decreases by 10% during LVRT. If you set **LVRT compensation power factor of reactive power in positive sequence** to **0**, the increment of positive-sequence reactive current generated by the inverter is 0 regardless of how much the AC voltage decreases during LVRT.	

 Copyright © Huawei Technologies Co., Ltd.

Parameter	Description	Remarks
LVRT compensation power factor of reactive power in negative sequence	During LVRT, the solar inverter needs to generate negative-sequence reactive power to support the power grid. This parameter is used to set the negative-sequence reactive power generated by the solar inverter. For example, if you set **LVRT compensation power factor of reactive power in negative sequence** to **2**, the increment of negative-sequence reactive current generated by the inverter is 20% of the rated current when the AC voltage decreases by 10% during LVRT. If you set **LVRT compensation power factor of reactive power in negative sequence** to **0**, the increment of negative-sequence reactive current generated by the inverter is 0 regardless of how much the AC voltage decreases during LVRT.	
Percentage of LVRT reactive current limiting	During LVRT, the device needs to limit the reactive current. For example, if you set **Percentage of LVRT reactive current limiting** to **50**, the reactive current upper limit of the device is 50% of the rated current during LVRT.	
Threshold of LVRT zero-current mode	When **Zero current due to power grid fault** is set to **Enable**, if the power grid voltage is less than the value of **Threshold of LVRT zero-current mode** during LVRT, the zero current mode is used. Otherwise, the mode configured in LVRT mode is used.	
LVRT recovery delay time	Specifies the delay time for LVRT power recovery.	
LVRT mode	Sets LVRT mode. The options are **Zero-current mode**, **Constant current mode**, **Reactive power priority mode**, and **Active power priority mode**.	
HVRT	HVRT is short for high voltage ride-through. When the grid voltage is abnormally high for a short time, the inverter cannot disconnect from the power grid immediately and has to work for some time.	-

 Copyright © Huawei Technologies Co., Ltd.

Parameter	Description	Remarks
Threshold for triggering HVRT (V)	Specifies the threshold for triggering HVRT. The threshold settings should meet the local grid standard.	This parameter is displayed when **HVRT** is set to **Enable**.
HVRT compensation power factor of reactive power in positive sequence	During HVRT, the inverter needs to generate positive-sequence reactive power to support the power grid. This parameter is used to set the positive-sequence reactive power generated by the inverter. For example, if you set **HVRT compensation power factor of reactive power in positive sequence** to **2**, the increment of positive-sequence reactive current generated by the inverter is 20% of the rated current when the AC voltage increases by 10% during HVRT.	
HVRT compensation power factor of reactive power in negative sequence	During HVRT, the inverter needs to generate negative-sequence reactive power to support the power grid. This parameter is used to set the negative-sequence reactive power generated by the inverter. For example, if you set **HVRT compensation power factor of reactive power in negative sequence** to **2**, the increment of negative-sequence reactive current generated by the inverter is 20% of the rated current when the AC voltage increases by 10% during HVRT.	
VRT exit hysteresis threshold	Specifies the LVRT/HVRT recovery threshold.	• This parameter is displayed when **LVRT** or **HVRT** is set to **Enable**. • LVRT recovery threshold = LVRT threshold + VRT exit hysteresis threshold • HVRT recovery threshold = HVRT threshold – VRT exit hysteresis threshold
LVRT undervoltage protection shield	Specifies whether to shield the undervoltage protection function during LVRT.	This parameter is displayed when **LVRT** is set to **Enable**.
Grid voltage protection shield during VRT	Specifies whether to shield the voltage protection function during LVRT or HVRT.	This parameter is displayed when **LVRT** or **HVRT** is set to **Enable**.

 Copyright © Huawei Technologies Co., Ltd.

Parameter	Description	Remarks
VRT active current limiting (%)	Specifies the percentage of the maximum active current to the rated current during fault ride-through (FRT).	-
VRT active power recovery gradient	Specifies the recovery rate when the active current recovers to the value at the moment before FRT.	-
Grid voltage trip triggering threshold (%)	Specifies the LVRT or HVRT threshold for triggering a transient voltage jump of a power grid. A transient voltage jump indicates that the inverter cannot immediately disconnect from the power grid when the power grid is abnormal due to transient changes.	This parameter is available when **Grid code** is set to **VDE 4120**.
Zero current due to power grid fault	Certain countries and regions have requirements on the output current during high/low voltage ride-through. In this case, set this parameter to **Enable**. After this parameter is set to **Enable**, the output current is less than 10% of the rated current during high/low voltage ride-through.	This parameter is displayed when **LVRT** or **HVRT** is set to **Enable**.
Voltage rise suppression	The standards of certain countries and regions require that when the output voltage exceeds a certain value, the inverter must suppress voltage rise by outputting reactive power and reducing active power.	-
Shutdown at 0% power limit	If this parameter is set to **Enable**, the inverter shuts down after receiving the 0% power limit command. If this parameter is set to **Disable**, the inverter does not shut down after receiving the 0% power limit command.	-
Frequency-based control	The standards of certain countries and regions require that if the power grid frequency fluctuates around the rated value, the inverter needs to fine-tune the active power output based on **Frequency-based adjustment ratio** to help stabilize the power grid frequency. In this case, set this parameter to **Enable**.	-
Frequency-based adjustment ratio	Specifies the adjustment ratio of the active power output.	This parameter is displayed when **Frequency-based control** is set to **Enable**.

 Copyright © Huawei Technologies Co., Ltd.

Parameter	Description	Remarks
Voltage rise suppressing reactive power adjustment point (%)	The standards of certain countries and regions require that the inverter generate a certain amount of reactive power when the output voltage exceeds a certain value.	• This parameter is displayed when **Voltage rise suppression** is set to **Enable**. • The value of **Voltage rise suppressing active power derating point** must be greater than that of **Voltage rise suppressing reactive power adjustment point**.
Voltage rise suppressing active power derating point (%)	The standards of certain countries and regions require that the active power of the inverter be derated according to a certain slope when the output voltage exceeds a certain value.	
Voltage rise suppression P-U curve	The standards of certain countries and regions require that the P-U curve be set.	This parameter is displayed when **Voltage rise suppression** is set to **Enable**.
Voltage rise suppression Q-U curve	The standards of certain countries and regions require that the Q-U curve be set.	
Frequency change rate protection	Set this parameter to **Enable** to protect the inverter when the grid frequency changes too fast.	-
Frequency change rate protection threshold (Hz/s)	Specifies the frequency change rate protection threshold.	This parameter is displayed when **Frequency change rate protection** is set to **Enable**.
Frequency change rate protection time (s)	Specifies the frequency change rate protection duration.	
CT anomaly detection	If this parameter is set to **Enable**, the inverter automatically checks whether CT cables are disconnected or connected in reverse polarity and reports an alarm to the SmartLogger.	This parameter is displayed only for the SUN2000-4.95KTL-JPL1.
Churn mode	If this parameter is set to **Enable**, the BackupBox switches to this mode (off-grid mode) when the grid fails.	-
Reserved backup capacity	When **Churn mode** (off-grid mode) is set to **Enable** and the battery SOC reaches this value, the battery stops discharging to ensure that the SOC is above this value.	The association is displayed when **Churn mode** (off-grid mode) is set to **Enable**.
Grid-tied/Off-grid switching mode	If this parameter is set to **Automatic**, the system switches to the off-grid mode when the grid fails, and switches to the grid-tied mode when the grid recovers.	

 Copyright © Huawei Technologies Co., Ltd.

Parameter	Description	Remarks
Switch to off-grid	This parameter is displayed only when **Grid-tied/Off-grid switching mode** is set to **Manual**. To manually switch to off-grid mode, select the box on the left and click **Submit**.	
Voltage in independent operation	AC operating voltage level of the inverter in off-grid mode can be **101 V** or **202 V**.	
Auto recovery from string-to-ground short-circuit protection	• If this parameter is set to **Enable**, the **String Short-Circuited to Ground** alarm is automatically cleared after fault recovery. • If this parameter is set to **Disable**, the **String Short-Circuited to Ground** alarm cannot be automatically cleared. You need to manually clear the alarm.	-
Microgrid compatibility	The default value is **Disable**. The recommended settings are as follows: • If **Working mode** is set to **VSG** for the inverter or **Scenario** is set to **On-grid**, set this parameter to **Disable**. • If **Working mode** is set to **PQ** for the inverter and the inverter works in a microgrid that uses a diesel generator or other voltage sources, set this parameter to **Enable**. If this parameter is set to **Enable**, the inverter adaptively changes the output power based on the original grid code and the grid voltage and frequency to support a higher ratio of current sources to voltage sources (that is, PV-to-ESS ratio).	-
Grid phase loss adaptability	This function is used to keep the inverter operating in on-grid mode when an open phase fault occurs. By default, this function is enabled for China's national standards and disabled for other standards.	This parameter applies only to some models. The actual display may vary. • **Positive-sequence reactive current limit during asymmetric LVRT (%)** and **Compensation angle during ZVRT** are displayed only when **LVRT** is set to **Enable**. • **Reactive current limit during HVRT (%)** is displayed only when **HVRT** is set to **Enable**.
Positive-sequence reactive current limit during asymmetric LVRT (%)	During asymmetric LVRT, the device needs to limit the positive-sequence reactive current.	

 Copyright © Huawei Technologies Co., Ltd.

Parameter	Description	Remarks
Negative-sequence reactive current limit during VRT (%)	During asymmetric LVRT, the device needs to limit the negative-sequence reactive current.	
Reactive current limit during HVRT (%)	During HVRT, the device needs to limit the reactive current.	
Min. active current during VRT (%)	During VRT, the device needs to limit the min. active current.	
Compensation angle during ZVRT	By default, this function is enabled for China's national standards and disabled for other standards.	
Reactive current compensation bias during LVRT	Specifies the percentage of the reactive compensation current in the rated current during LVRT. The default value is **0.0**, and the value range is [–100.0, 100.0].	This parameter applies only to some models. The actual display may vary. • **Reactive current compensation bias during LVRT** and **Power dispatching hold time after LVRT** are displayed only when **LVRT** is set to **Enable**. • **Reactive current compensation bias during HVRT** and **Power dispatching hold time after HVRT** are displayed only when **HVRT** is set to **Enable**.
Reactive current compensation bias during HVRT	Specifies the percentage of the reactive compensation current in the rated current during HVRT. The default value is **0.0**, and the value range is [–100.0, 100.0].	
Power dispatching hold time after LVRT	Specifies the delay for the device to stop the power dispatching response after LVRT. After the stopping state ends, the device starts to respond to the dispatching command. The value range is [0, 60000].	
Power dispatching hold time after HVRT	Specifies the delay for the device to stop the power dispatching response after HVRT. After the stopping state ends, the device starts to respond to the dispatching command. The value range is [0, 60000].	
Anti-rollback	The default setting is **Enable**. • **Enable**: Enable the anti-rollback function. • **Disable**: Disable the anti-rollback function.	• This parameter applies only to some models. The actual display may vary. • If the parameter is set to **Enable**, the software cannot be rolled back to the source version during the software upgrade to prevent vulnerabilities in the source version from being exploited.

 Copyright © Huawei Technologies Co., Ltd.

Parameter	Description	Remarks
PV module short-circuit current	The value ranges from 8.0 A to 20.0 A, with one decimal place reserved. The single-side short-circuit current of the connected PV module under STC is available in the PV module parameters.	-
PV module bifaciality factor	The value ranges from 1.0 to 1.1, with one decimal place reserved. Select 1.0 for monofacial PV modules and 1.1 for bifacial PV modules.	-
DC switch quick-break protection threshold	The value ranges from –10.0 to –30.0. When the inverter detects that the backfeed current exceeds the setting, it immediately triggers disconnection.	-
Communication disconnection fail-safe	**Enable**: In the feed-in limitation scenario, if the device is disconnected from the SmartLogger or Smart Dongle for a period longer than the **Communication disconnection detection time**, the inverter will derate the active power. **Disable**: Protection upon communication failure is disabled. After being disconnected from the SmartLogger or Smart Dongle, the device continues to operate in the same way as before the disconnection. If **Automatic OFF due to communication interrupted** is set to **Enable** (the default value is **Disable**), the device shuts down once it is disconnected from the SmartLogger or Smart Dongle.	-
Communication disconnection detection time (s)	Specifies the detection time for protection upon a communication failure between the inverter and the SmartLogger or Smart Dongle.	This parameter is displayed when **Protection upon communication failure** is set to **Enable**.
Active power threshold (%) when communication fails	Specifies the threshold of the device's rated active power in percentage.	

 Copyright © Huawei Technologies Co., Ltd.

Power Adjustment

Parameter	Description	Remarks
Remote power schedule	If this parameter is set to **Enable**, the inverter responds to the scheduling command from the remote port. If this parameter is set to **Disable**, the inverter does not respond to the scheduling command from the remote port.	-
Schedule instruction valid duration (s)	Specifies the validity period of the scheduling instruction. When this parameter is set to **0**, the scheduling instruction takes effect permanently.	-
Maximum apparent power (kVA)	Specifies the output upper threshold for the maximum apparent power to adapt to the capacity requirements of standard and customized inverters.	If the maximum active power equals the value of Smax_limit, this parameter is not displayed.
Maximum active power (kW)	Specifies the output upper threshold for the maximum active power to adapt to different market requirements.	-
Active power change gradient (%/s)	Specifies the change rate of the inverter active power.	-
Fixed active power derated (kW)	Specifies the active power output of the inverter by fixed value.	This parameter is displayed when **Remote power scheduling** is set to **Enable**. This parameter can be set to 27.5 kW at most for the SUN2000-25KTL-US.
Active power percentage derating (%)	Adjusts the active output power of the inverter by percentage. If this parameter is set to **100**, the inverter provides the maximum output power.	This parameter is displayed when **Remote power scheduling** is set to **Enable**. If this parameter is set to **100**, the inverter provides the maximum output power.
Reactive power change gradient (%/s)	Specifies the change rate of the inverter reactive power.	-
Plant active power gradient (min/100%)	Specifies the rate of active power rise due to irradiance changes.	-
Filter duration for average active power (ms)	Specifies the period of active power rise due to irradiance changes. This parameter is used with **Plant active power gradient**.	-

 Copyright © Huawei Technologies Co., Ltd.

Parameter	Description	Remarks
PF(U) voltage detection filter time (s)	Specifies the time for filtering the grid voltage in the PF-U curve.	-
Reactive power adjustment time (s)	Specifies the adjustment time for the reactive power to reach the target value during reactive power adjustment.	-
Power factor	Specifies the power factor of the inverter.	This parameter is displayed when **Remote power scheduling** is set to **Enable**.
Reactive power compensation (Q/S)	Specifies the reactive power output by the inverter.	
Reactive power compensation at night (Q/S)	During the reactive power compensation at night, the reactive power is scheduled by percentage.	-
Night-time reactive power output	In some specific application scenarios, a power grid company requires that the inverter can perform reactive power compensation at night to ensure that the power factor of the local power grid meets requirements.	This parameter is displayed when **Isolation** is set to **Input ungrounded (with TF)**.
Apply nighttime reactive power parameters	If this parameter is set to **Enable**, the inverter outputs reactive power based on the setting of **Reactive power output at night**. If this parameter is set to **Disable**, the inverter executes the remote scheduling command.	This parameter is displayed when **Reactive power at night** is set to **Enable**.
Reactive power compensation at night (kVar)	During the reactive power compensation at night, the reactive power is scheduled by fixed value.	This parameter is displayed when **Reactive power output at night** and **Apply nighttime reactive power parameters** are set to **Enable**.
Overfrequency-caused power derating	If this parameter is set to **Enable**, when the power grid frequency exceeds the frequency threshold for triggering overfrequency-caused power derating, the active power of the inverter is derated based on a certain gradient.	-

 Copyright © Huawei Technologies Co., Ltd.

Parameter	Description	Remarks
Frequency threshold for triggering overfrequency-caused power derating (Hz)	The standards of certain countries and regions require that the output active power of the inverter be derated when the power grid frequency exceeds a certain value.	• This parameter is displayed when **Overfrequency-caused power derating** is set to **Enable**. • When setting this parameter, ensure that the following condition is met: **Frequency for exiting overfrequency derating** ≤ **Frequency for triggering overfrequency derating** < **Cutoff frequency of overfrequency derating**.
Frequency threshold for exiting overfrequency-caused power derating (Hz)	Specifies the frequency threshold for exiting overfrequency-caused power derating.	
Frequency threshold for stopping overfrequency-caused power derating (Hz)	Specifies the frequency threshold for stopping overfrequency-caused power derating.	
Power threshold for stopping overfrequency-caused power derating (%)	Specifies the power threshold for stopping overfrequency-caused power derating.	
Frequency detection filter time (ms)	Specifies the frequency detection filter time.	
Gradient of overfrequency-caused power derating (%/s)	Specifies the rate of overfrequency-caused power derating.	
Gradient of power recovery from overfrequency-caused derating (%/min)	Specifies the power recovery rate for overfrequency-caused power derating.	
Voltage derating	If this parameter is set to **Enable**, when the grid voltage exceeds the voltage derating start point, the active power of the inverter is derated based on a certain gradient.	-
Voltage derating start point (V)	Specifies the start point for voltage derating.	• This parameter is displayed when **Voltage derating** is set to **Enable**. • When setting this parameter, ensure that the following condition is met: **Voltage derating start point** < **Voltage derating stop point**.
Voltage derating stop point (V)	Specifies the stop point for voltage derating.	
Voltage derating cut-off power (V)	Specifies the cut-off power for voltage derating.	
Apparent power baseline (kVA)	Adjusts the apparent output baseline of the inverter.	The apparent power baseline must be greater than or equal to the active power baseline.

 Copyright © Huawei Technologies Co., Ltd.

Parameter	Description	Remarks
Active power baseline (kW)	Adjusts the active output baseline of the inverter.	-
Underfrequency-caused power raising	The standards of certain countries and regions require that if the power grid frequency is lower than **Frequency threshold for triggering underfrequency-caused power raising**, the inverter needs to increase the active power output to increase the power grid frequency. In this case, set this parameter to **Enable**.	-
Frequency threshold for triggering underfrequency-caused power raising (Hz)	Specifies the frequency threshold for triggering underfrequency-caused power raising.	This parameter is displayed when **Underfrequency rise power** is set to **Enable**.
Gradient of underfrequency-caused power raising (%/min)	Specifies the power recovery rate for underfrequency-caused power raising.	
Frequency threshold for stopping underfrequency-caused power raising (Hz)	Specifies the frequency threshold for stopping underfrequency-caused power raising.	
Power threshold for stopping underfrequency-caused power raising (%)	Specifies the power threshold for stopping underfrequency-caused power raising.	
Frequency threshold for exiting underfrequency-caused power raising (Hz)	Specifies the frequency threshold for exiting underfrequency-caused power raising.	
Insulation resistance inspection during reactive power output at night	• **Enable**: Enable the function of insulation resistance inspection during reactive power output at night. • **Disable**: Disable the function of insulation resistance inspection during reactive power output at night.	• This parameter applies only to some models. The actual display may vary. • This parameter is displayed when **Reactive power at night** is set to **Enable**. • If this parameter is set to **Enable**, the device automatically detects the status every night. During the detection, the device automatically resets.

 Copyright © Huawei Technologies Co., Ltd.

Parameter	Description	Remarks
Q-U reactive power compensation coefficient	Specifies the Q-U reactive power compensation coefficient. You can adjust the reactive power compensation to maintain the system voltage stability and power factor.	-
Q-U voltage dead zone	Specifies the Q-U voltage dead zone.	-
Q-U voltage shift compensation coefficient	Specifies the Q-U voltage shift compensation coefficient. You can dynamically adjust the reactive power output range at different voltage levels to adapt to load changes or grid fluctuations.	-
Q-U reactive power vertical compensation coefficient	Specifies the Q-U reactive power vertical compensation coefficient. You can directly adjust the reactive power output at a specific voltage point or within a specified voltage range to quickly respond to voltage fluctuations. This parameter takes effect only when the number of points on the Q-U curve is 4 and the slopes of P1P2 and P3P4 are the same.	-

PV String Access Detection

- PV string access detection applies to large-scale commercial ground PV plants with PV strings facing the same direction.
- In AC or DC power limiting scenarios:
  - If the PV string access type has not been identified, **PV string N access status** will be displayed as **Disconnection**. The PV string access type can be identified only when the solar inverters restore to the non-power limiting state and the current of all connected PV strings reaches the **startup current.**
  - If the PV string access type has been identified, when a certain PV string connected to the 2-in-1 terminals is lost, no alarm will be generated. If a certain PV string connected to the 2-in-1 terminals is restored, the access type cannot be identified. You can determine whether both 2-in-1 PV strings are restored only when the PV string current reaches **Startup current for 2-in-1 detection**.
- After setting the parameters, you can go to the **Running Info.** tab page to check whether the PV string connection status is normal.

 Copyright © Huawei Technologies Co., Ltd.

Table 6-15 Parameter description

Parameter	Description
PV String Access Detection	**PV String Access Detection** is set to **Disable** by default. After solar inverters are connected to the power grid, set **PV String Access Detection** to **Enable**.
Startup current	When the current of all connected PV strings reaches the preset value, the PV string access detection function is enabled. **NOTE** Startup current setting rules: ● Startup current = I_{sc} (S_{tc}) x 0.6 (rounded up). For details about I_{sc} (S_{tc}), see the PV module nameplate. ● Default startup current (5 A): applicable to the scenarios where the short-circuit current I_{sc} (S_{tc}) is greater than 8 A for the monocrystalline and polycrystalline PV modules.
Startup current for 2-in-1 detection	When the current of a PV string reaches **Startup current for 2-in-1 detection**, the PV string is automatically identified as **2-in-1**. You are advised to retain the default settings.
PV string N access type **NOTE** *N* is the DC input terminal number of the solar inverter.	Set this parameter based on the type of the PV string connected to DC input terminal *N* of the solar inverter. Currently, the options are as follows: Automatic identification (default value), Disconnection, Single PV string, and 2-in-1. You are advised to retain the default value. If the value is incorrectly set, the PV string access type may be incorrectly identified and alarms may be generated by mistake for the PV string access status.

6.3.9.2 Tracking System

- The web software versions corresponding to the WebUI screenshots in this document are V300R001C00SPC050. The screenshots are for reference only.
- If a PV string uses a tracking system with a controller, set tracking system parameters on the **Tracking System** tab page.

Procedure

1. Before setting the tracking system parameters, you need to set **Tracker controller** in **Feature Parameters** on the **Running Param.** tab page. Select the corresponding vendor based on the information about the tracker controller. If the vendor is not in the list, select **Other vendors**.

   NOTE

   This section uses **Other vendors** as an example.

Figure 6-30 Setting tracking system controller

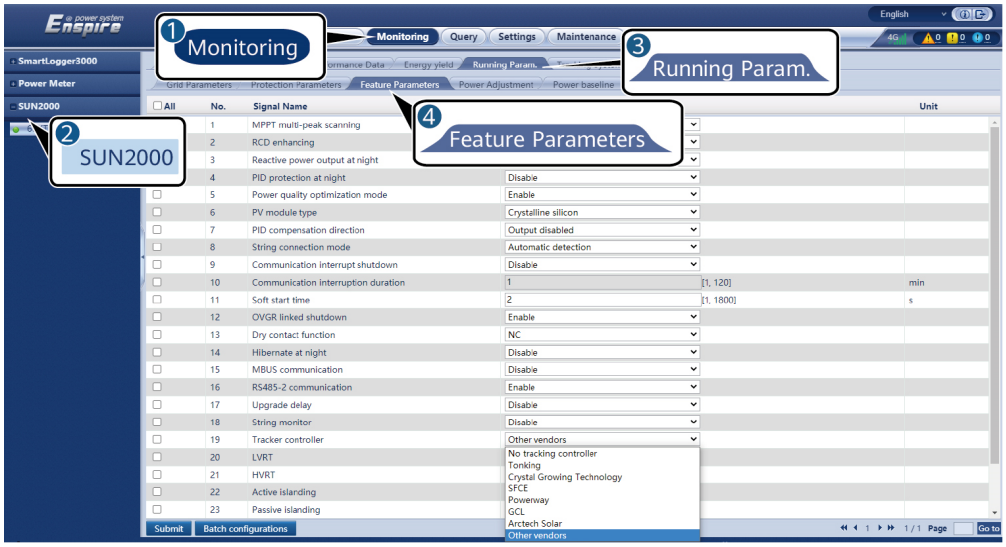

2. On the **Tracking System** tab page, select **Configure Para**.

Figure 6-31 Setting configuration parameters (tracking system)

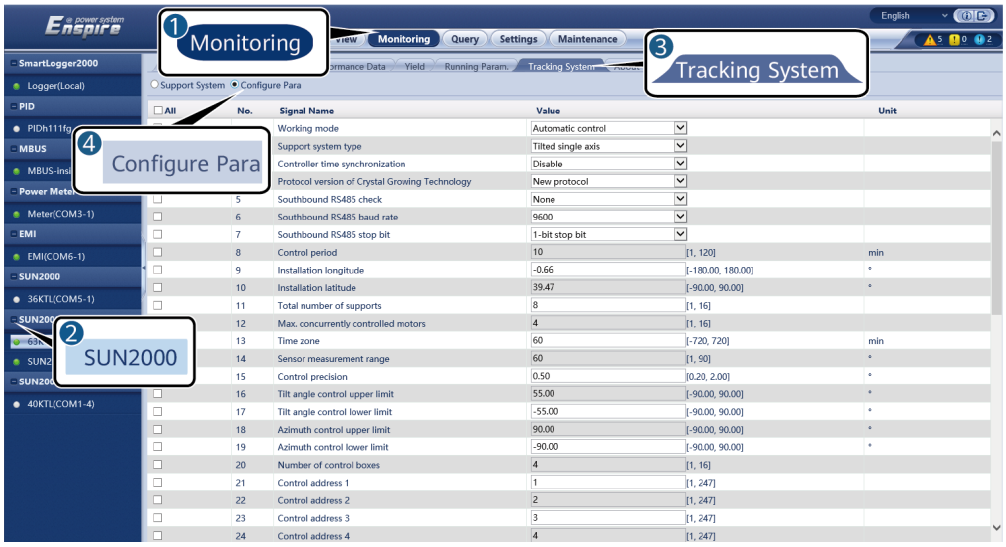

Parameter	Description
Working mode	Six working modes are supported: **Automatic control**, **Manual control**, **Maintenance mode**, **Wind mode**, **Snow mode**, and **Rain mode**. Set **Working mode** based on the actual operating status of the inverter.

 Copyright © Huawei Technologies Co., Ltd.

Parameter	Description
Support system type	Four types of trackers are supported: **Tilted single axis**, **Horizontal single axis**, **Vertical single axis**, and **Dual axis**. **NOTE** The tracker type can be set only when **Tonking** or **Crystal Growing Technology** is selected. For other vendors, the tracker type is automatically selected based on the inverter configuration.
Controller time synchronization	This parameter can be set to **Enable** or **Disable**. After this parameter is set to **Enable**, the time is synchronized with the tracking system every 15 minutes.
Protocol version of Crystal Growing Technology	When **Crystal Growing Technology** is selected, you can set this parameter to **New protocol** or **Old protocol** based on the site requirements.
Southbound RS485 check	This parameter can be set to **None**, **Odd parity**, or **Even parity**.
Southbound RS485 baud rate	This parameter can be set to **4800**, **9600**, **19200**, or **115200**.
Southbound RS485 stop bit	This parameter can be set to **1-bit stop bit** or **2-bit stop bit**.
Control period	When **Tonking** is selected, you can set the period for refreshing the target angle.
Installation longitude	The longitude and latitude can be set.
Installation latitude	
Total number of supports	The inverter obtains the number of supports under each control box based on the configured number and addresses of the control boxes, and calculates and obtains the total number of supports. **NOTE** This parameter can be set only when **Tonking** or **Crystal Growing Technology** is selected.
Max. concurrently controlled motors	When **Tonking** is selected, this parameter can be set.
Time zone	The time zone can be set.
Sensor measurement range	When **Tonking** is selected, this parameter can be set.
Control precision	When **Tonking** is selected, this parameter can be set.
Tilt angle control upper limit	These parameters can be set only when **Work mode** is set to **Manual control**.

 Copyright © Huawei Technologies Co., Ltd.

Parameter	Description
Tilt angle control lower limit	
Azimuth control upper limit	
Azimuth control lower limit	
Number of control boxes	Set this parameter based on the number of control boxes connected to the inverter. **NOTE** This parameter can be set only when **Other vendors** is selected.
Control address 1–16	Set this parameter based on the communication address of the control box. **NOTE** This parameter can be set only when **Other vendors** is selected.

3. On the **Tracking System** tab page, check **Total number of supports** under **Support System** and check whether **Access Status** and **System Status** are normal.

NOTE

- Check whether the value of **Total number of supports** is the same as that in **Configure Para**.
- If **Working mode** in **Configure Para** is set to **Manual control**, you can manually set parameters such as **Starting**, **Stop**, **Clr Fault**, and **Azimuth** under **Support System**.

Figure 6-32 Support system (tracking system)

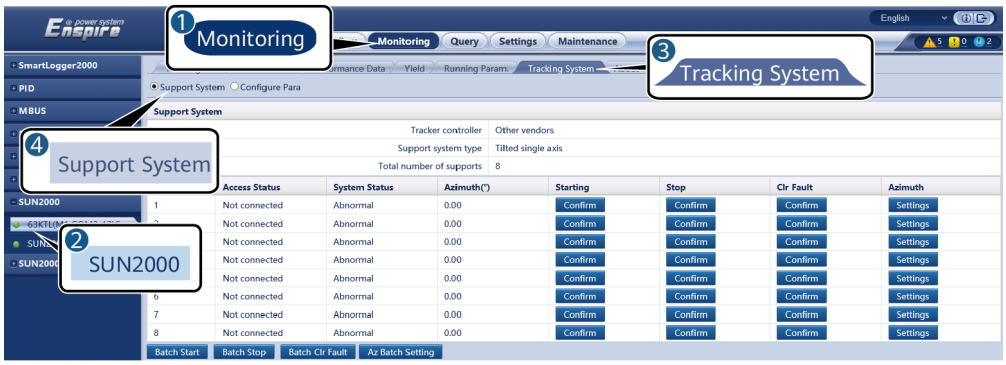

6.3.9.3 Characteristic Curves

The web software versions corresponding to the WebUI screenshots in this document are V300R001C00SPC050. The screenshots are for reference only.

Step 1 Set characteristic curve parameters and click **Submit**.

 Copyright © Huawei Technologies Co., Ltd.

Figure 6-33 Characteristic curves

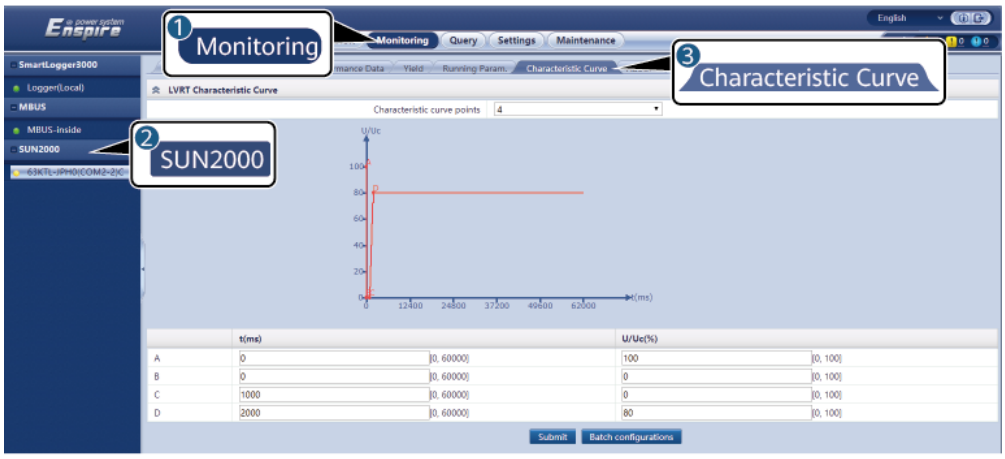

IL04J00026

Characteristic Curve Name	Description	Remarks
LVRT Characteristic Curve	Configure this characteristic curve based on the power grid standard.	The SmartLogger supports only the characteristic curve configuration for LVRT that lasts no more than 60s. If the power grid standard requires that the duration of LVRT be greater than 60s, **LVRT Characteristic Curve** is not displayed for the grid code.
[Voltage Rise Suppression]Q-U curve	1. Set **Voltage Rise Suppression** to **Enable**. 2. Configure this characteristic curve based on the power grid standard.	-
[Voltage Rise Suppression]P-U curve	1. Set **Voltage Rise Suppression** to **Enable**. 2. Configure this characteristic curve based on the power grid standard.	-

 Copyright © Huawei Technologies Co., Ltd.

Characteristic Curve Name	Description	Remarks
HVRT characteristic curve	Set the high voltage ride-through capability of the device.	• This parameter applies only to some models. The actual display may vary. • This parameter is displayed only when **HVRT** is set to **Enable**.

----End

6.3.9.4 Battery

This section describes how to query or set battery parameters when the inverter is connected to a battery.

Battery Information

Parameter	Description
Working status	Indicates the current working status of the battery, which can be **Offline**, **Idle**, **Running**, **Faulty**, or **Hibernating**.
Working mode	Indicates the current working mode of the inverter battery control.
Charge/Discharge power	Total charge and discharge power of all batteries connected to the inverter.
SOC	Indicates the power status of all batteries connected to the inverter.
Bus voltage	Indicates the voltage on the DC bus of the battery.
Bus current	Indicates the current on the DC bus of the battery.
Rated capacity	Total rated capacity of all batteries connected to the inverter. The rated capacity refers to the total amount of energy discharged by the batteries in normal conditions.
Current-day charge capacity	Total energy charged into the batteries on the current day.
Current-day discharge capacity	Total energy discharged from the batteries on the current day.
Total charge	Total energy charged into the batteries.
Total discharge	Total energy discharged from the batteries.

 Copyright © Huawei Technologies Co., Ltd.

Energy Storage Unit

Parameter		Description
Firmware version		Software version of the DC/DC module.
SN		Serial number of the DC/DC module.
Working status		Indicates the current working status of the energy storage unit, which can be **Offline**, **Idle**, **Running**, **Faulty**, or **Hibernating**.
Rated capacity		Total amount of energy discharged by the energy storage unit in normal conditions.
Voltage		Voltage of the energy storage unit.
Current		Current of the energy storage unit.
Internal temperature		Temperature inside the energy storage unit.
SOC		Indicates the power status of the energy storage unit.
Charge/Discharge power		Indicates the charge or discharge power of the energy storage unit.
Current-day charge capacity		Total energy charged into the energy storage unit on the current day.
Current-day discharge capacity		Total energy discharged from the energy storage unit on the current day.
Total charge		Total energy charged into the energy storage unit.
Total discharge		Total energy discharged from the energy storage unit.
Battery model		Models of the energy storage unit, including **LG-RESU** and **LUNA2000**.
Battery pack	Firmware version	Software version of the battery pack.
	SN	Serial number of the battery pack.
	Working status	Indicates the current working status of the battery pack, which can be **Offline**, **Idle**, **Running**, **Faulty**, or **Hibernating**.
	Voltage	Voltage of the battery pack.
	Charge/ Discharge power	Indicates the charge or discharge power of the energy storage unit.
	Highest temperature	Indicates the highest temperature detected in the battery pack.
	Lowest temperature	Indicates the lowest temperature detected in the battery pack.
	SOC	Power status of the battery pack.

 Copyright © Huawei Technologies Co., Ltd.

Parameter		Description
	Total discharge	Total energy discharged from the battery pack.

Configurable Parameters

Parameter	Description
Energy Storage Unit	Displays or sets the battery model. The system automatically identifies and displays the correct model. Generally, you do not need to manually modify the information.
Maximum charge power	Sets the maximum power for battery charging.
Maximum discharge power	Sets the maximum power for battery discharging.
Charge from AC	If this parameter is set to **Enable**, the batteries can be charged from the power grid.
Maximum charge power of grid	Sets the maximum power for charging the batteries from the power grid.
Charge cutoff capacity	When the SOC of the battery reaches this value, charging stops.
Max. depth of discharge	When the SOC of the battery reaches this value, discharging stops.
Grid charge cutoff SOC	When the SOC of the battery reaches this value, the grid stops charging the battery.

Charge/Discharge

Parameter	Description
Charge/Discharge	Forced charge/discharge operation, which can be **Charge**, **Discharge**, or **Stop**.
Mode Settings	To enter the forced charge/discharge mode, set **Duration** or **Target SOC**.
Duration	Sets the duration of forced charge/discharge. When the time is reached, the forced charge/discharge stops automatically. This parameter is displayed when **Mode Settings** is set to **Duration**.
Target SOC	Sets the target SOC for forced charge/discharge. When the SOC reaches this value, the forced charge/discharge stops automatically. This parameter is displayed when **Mode Settings** is set to **Target SOC**.
Charged energy	Charged energy in this forced charge/discharge
Discharged energy	Discharged energy in this forced charge/discharge

 Copyright © Huawei Technologies Co., Ltd.

6.3.10 Setting PCS Parameters (100KTL and 200KTL Series)

This section describes how to set PCS parameters for the LUNA2000-100KTL and LUNA2000-200KTL series. This section does not apply to V300R001C00.

Procedure

Step 1 Choose **Monitoring** > **PCS** > **Running Param.**, set running parameters, and click **Submit**.

NOTICE

- Before setting the running parameters of the Smart PCS, ensure that the DC side of the Smart PCS is powered on.
- The parameter list provided in this document includes all configurable parameters, which may vary depending on the device model. The actual display may vary.

----End

6.3.10.1 Running Parameters

Grid Parameters

Parameter	Description
Grid code	Set this parameter based on the grid code of the country or region where the device is used.
Output mode	Specifies the supported power grid types.
Isolation settings	Specifies the device grounding status on the DC side and the connection to the power grid.
Auto start upon grid recovery	Specifies whether to allow the device to automatically start after the power grid recovers.
On-grid recovery time (s)	Specifies the time after which the device begins restarting after the power grid recovers.
Quick startup for short-time grid disconnection	Specifies whether to allow the device to quickly start after the power grid recovers from a short-time failure.
Duration for determining short-time grid disconnection (ms)	The standards of certain countries and regions require that the device should not disconnect from the power grid if the power grid experiences a short-time failure. After the fault is rectified, the device output power needs to be quickly restored.
Soft start time after grid failure (s)	Specifies the time for the power to gradually increase when the device restarts after the power grid recovers.

 Copyright © Huawei Technologies Co., Ltd.

Parameter	Description
Upper voltage threshold (V) for grid connection	According to the standards of certain countries and regions, initial grid connection is not allowed when the grid voltage is higher than the maximum voltage for grid connection.
Lower voltage threshold (V) for grid connection	According to the standards of certain countries and regions, initial grid connection is not allowed when the grid voltage is lower than the minimum voltage for grid connection.
Upper frequency threshold (Hz) for grid connection	According to the standards of certain countries and regions, initial grid connection is not allowed when the grid frequency is higher than the maximum frequency for grid connection.
Lower frequency threshold (Hz) for grid connection	According to the standards of certain countries and regions, initial grid connection is not allowed when the grid frequency is lower than the minimum frequency for grid connection.
Grid reconnection voltage upper limit (V)	According to the standards of certain countries and regions, grid reconnection is not allowed when the grid voltage is higher than the maximum voltage for grid reconnection.
Grid reconnection voltage lower limit (V)	According to the standards of certain countries and regions, grid reconnection is not allowed when the grid voltage is lower than the minimum grid voltage for grid reconnection.
Grid reconnection frequency upper limit (Hz)	According to the standards of certain countries and regions, grid reconnection is not allowed when the grid frequency is higher than the maximum grid frequency for grid reconnection.
Grid reconnection frequency lower limit (Hz)	According to the standards of certain countries and regions, grid reconnection is not allowed when the grid frequency is lower than the minimum grid frequency for grid reconnection.
Grid automatic reconnection time	Specifies the time after which the device begins restarting after the power grid recovers.

Protection Parameters

Parameter	Description
Insulation resistance protection threshold (MΩ)	To ensure device safety, the device detects the insulation resistance of the DC side to the ground when it starts a self-check. If the detected value is less than the preset value, the device does not connect to the grid nor start. ● LUNA2000-100KTL-M1 and LUNA2000-100KTL-M0: The recommended value range is [0.033, 1.5]. ● Other models: The recommended value range is [0.05, 1.5].
Active islanding protection	Specifies whether to enable the active islanding protection function.
Passive islanding protection	Specifies whether to enable the passive islanding protection function.

 Copyright © Huawei Technologies Co., Ltd.

Parameter	Description
Unbalance voltage protection (%)	Specifies the device protection threshold when the power grid voltage is unbalanced.
Phase protection threshold (°)	The Japanese standard requires that during passive islanding detection, the protection should be triggered if an abrupt voltage phase change is detected.
Phase angle offset protection	The standards of certain countries and regions require that the device needs to be protected when the phase angle offset of the power grid three phases exceeds a certain value.
10-minute UV protection	Specifies the 10-minute undervoltage protection threshold.
10-minute UV protection time	Specifies the 10-minute undervoltage protection duration.
10 minute OV protection (V)	Specifies the 10-minute overvoltage protection threshold. ● For the LUNA2000-100KTL-NHH1, LUNA2000-200KTL-H0, and LUNA2000-200KTL-H1 models, the value range is [800, 1000] V. ● For the LUNA2000-100KTL-M0 and LUNA2000-100KTL-M1, the value range is [400, 500] V.
10 minute OV protection time (ms)	Specifies the 10-minute overvoltage protection duration.
Level-N OV protection (V)	Specifies the level-N grid overvoltage protection threshold.
Level-N OV protection time (ms)	Specifies the level-N grid overvoltage protection duration.
Level-N UV protection (V)	Specifies the level-N grid undervoltage protection threshold.
Level-N UV protection time (ms)	Specifies the level-N grid undervoltage protection duration.
Frequency change rate protection	If this parameter is set to **Enable**, the device is protected when the power grid frequency changes too fast.
Frequency change rate protection threshold (Hz/s)	Specifies the frequency change rate protection threshold.
Duration threshold (s) for frequency change rate protection	The device is protected when the grid frequency change duration exceeds the value.
Level-N OF protection (Hz)	Specifies the level-N grid overfrequency protection threshold.
Level-N OF protection time (ms)	Specifies the level-N grid overfrequency protection duration.
Level-N UF protection (Hz)	Specifies the level-N grid underfrequency protection threshold.

 Copyright © Huawei Technologies Co., Ltd.

Parameter	Description
Level-N UF protection time (ms)	Specifies the level-N grid underfrequency protection duration.

NOTE

N can be 1, 2, 3, 4, 5, or 6.

Feature Parameters

Parameter	Description	Remarks
Communication interruption duration	Specifies the duration for determining communication interruption between the device and the SmartLogger.	-
Shutdown on communication failure	The standards of certain countries and regions require that the device shut down after the communication is interrupted for a certain time.	If this parameter is set to **Enable**, the device automatically shuts down after the **Communication interruption duration** is reached.
Automatic startup upon communication recovery	If this parameter is set to **Enable**, the device automatically starts after communication recovers. If this parameter is set to **Disable**, the device needs to be started manually after communication recovers.	This parameter is displayed when the **Shutdown on communication failure** is set to **Enable**.
Protection upon communication failure	**Enable**: In the feed-in limitation scenario, if the device is disconnected from the SmartLogger or Smart Dongle for a period longer than the **Communication disconnection detection time**, the inverter will derate the active power. **Disable**: Protection upon communication failure is disabled. After being disconnected from the SmartLogger or Smart Dongle, the device continues to operate in the same way as before the disconnection. If **Automatic OFF due to communication interrupted** is set to **Enable** (the default value is **Disable**), the device shuts down once it is disconnected from the SmartLogger or Smart Dongle.	-
Communication disconnection detection time (s)	Specifies the detection time for protection upon a communication failure between the device and the SmartLogger or Smart Dongle.	This parameter is displayed when **Protection upon communication failure** is set to **Enable**.

 Copyright © Huawei Technologies Co., Ltd.

Parameter	Description	Remarks
Active power mode when communication fails	Specifies the protection mode of the active power after the communication is interrupted. The value can be **Percentage** or **Fixed value**.	This parameter is displayed when **Protection upon communication failure** is set to **Enable**.
Active power limit when communication fails (%)	Specifies the threshold of the device's rated active power in percentage.	This parameter is displayed when **Protection in the case of communication failure** is set to **Enable** and **Active power threshold when communication fails** is set to a percentage.
Active power limit when communication fails (kW)	Specifies the active power threshold as a fixed value.	This parameter is displayed when **Protection upon communication failure** is set to **Enable** and **Active power mode when communication fails** is set to **Fixed value**.
Reactive power mode when communication fails	Specifies the protection mode of the reactive power after the communication is interrupted. The value can be **Q/S** or **Power factor**.	This parameter is displayed when **Protection upon communication failure** is set to **Enable**.
Reactive power limit when communication fails	Specifies the power factor threshold of the reactive power.	This parameter is displayed when **Protection upon communication failure** is set to **Enable** and **Reactive power mode when communication fails** is set to **Power factor**.
Reactive power limit when communication fails (%)	Specifies the Q/S threshold of the reactive power.	This parameter is displayed when the **Protection in the case of communication failure** is set to **Enable** and **Reactive power mode when communication fails** is set to **Q/S**.

Copyright © Huawei Technologies Co., Ltd.

Parameter	Description	Remarks
Soft start time (s)	Specifies the duration for the power to gradually increase until the device starts.	-
Shutdown gradient (%/s)	Specifies the power change rate until the device shuts down.	-
Shutdown at 0% power limit	If this parameter is set to **Enable**, the device shuts down after receiving the 0% power limit command. If this parameter is set to **Disable**, the device does not shut down after receiving the 0% power limit command.	-
Hibernate at night	The device performs the monitoring function at night. If this parameter is set to **Enable**, the monitoring function of the device will hibernate at night to reduce power consumption.	-
Delayed upgrade	This parameter is mainly used in the upgrade scenarios where the power supply on the DC side is disconnected.	After the upgrade starts, if **Delayed upgrade** is set to **Enable**, the upgrade package is loaded first. After the DC side power supply recovers and the activation conditions are met, the device automatically activates the upgrade.
HVRT	HVRT is short for high voltage ride-through. When the grid voltage is abnormally high for a short time, the device cannot disconnect from the power grid immediately and has to work for some time.	-
HVRT threshold (V)	Specifies the threshold for triggering HVRT. The threshold settings should meet the local grid standard.	This parameter is displayed when **HVRT** is set to **Enable**.
Positive-sequence reactive power compensation factor in HVRT	During HVRT, the device needs to generate positive-sequence reactive power to support the power grid. This parameter is used to set the positive-sequence reactive power generated by the device. For example, if you set this parameter to **2**, the increment of positive-sequence reactive current generated by the device is 20% of the rated current when the AC voltage increases by 10% during HVRT.	

 Copyright © Huawei Technologies Co., Ltd.

Parameter	Description	Remarks
Negative-sequence reactive power compensation factor in HVRT	During HVRT, the device needs to generate negative-sequence reactive power to support the power grid. This parameter is used to set the negative-sequence reactive power generated by the device. For example, if you set this parameter to **2**, the increment of negative-sequence reactive current generated by the device is 20% of the rated current when the AC voltage increases by 10% during HVRT.	
LVRT	LVRT is short for low voltage ride-through. When the grid voltage is abnormally low for a short time, the device cannot disconnect from the power grid immediately and has to work for some time.	-
LVRT threshold (V)	Specifies the threshold for triggering LVRT. The threshold settings should meet the local grid standard.	This parameter is displayed when **LVRT** is set to **Enable**.
Positive-sequence reactive power compensation factor in LVRT	During LVRT, the device needs to generate positive-sequence reactive power to support the power grid. This parameter is used to set the positive-sequence reactive power generated by the device. For example, if you set this parameter to **2**, the increment of positive-sequence reactive current generated by the device is 20% of the rated current when the AC voltage decreases by 10% during LVRT.	
Negative-sequence reactive power compensation factor in LVRT	During LVRT, the device needs to generate negative-sequence reactive power to support the power grid. This parameter is used to set the negative-sequence reactive power generated by the device. For example, if you set this parameter to **2**, the increment of negative-sequence reactive current generated by the device is 20% of the rated current when the AC voltage decreases by 10% during LVRT.	
LVRT active current maintenance coefficient	Specifies the active current proportional coefficient before and during LVRT.	

 Copyright © Huawei Technologies Co., Ltd.

Parameter	Description	Remarks
LVRT reactive current limiting (%)	During LVRT, the device needs to limit the reactive current. For example, if you set this parameter to **50**, the reactive current upper limit of the device is 50% of the rated current during LVRT.	
Threshold of LVRT zero-current mode	If **Zero-current mode on power grid fault** is enabled and the power grid voltage is less than **Threshold of LVRT zero-current mode** during LVRT, the zero-current mode is used. Otherwise, the mode set in LVRT mode is used.	
LVRT mode	Specifies the LVRT mode. The options are **Zero-current mode**, **Constant current mode**, **Reactive power priority mode**, and **Active power priority mode**.	
LVRT characteristic curve	Specifies the LVRT capability of the device.	-
Deactivate grid voltage protection during HVRT/LVRT	Specifies whether to shield the voltage protection function during LVRT or HVRT.	This parameter is displayed when **LVRT** or **HVRT** is set to **Enable**.
VRT exit hysteresis threshold	Specifies the LVRT/HVRT recovery threshold.	• This parameter is displayed when **LVRT** or **HVRT** is set to **Enable**. • LVRT recovery threshold = LVRT threshold + VRT exit hysteresis threshold • HVRT recovery threshold = HVRT threshold – VRT exit hysteresis threshold
VRT active current limiting (%)	Specifies the percentage of the maximum active current to the rated current during fault ride-through (FRT).	-
VRT active power recovery gradient	Specifies the recovery rate when the active current is restored to the value at the moment before fault ride-through.	-
Zero current due to power grid fault	Specifies whether to enable the function of working in zero-current mode upon a power grid fault.	-
Grid voltage trip triggering threshold	This parameter can be set only for the VDE4120.	-

 Copyright © Huawei Technologies Co., Ltd.

Parameter	Description	Remarks
Voltage rise suppression	The standards of certain countries and regions require that the device suppress voltage rise by outputting reactive power and reducing active power when the output voltage exceeds a certain value.	-
Reactive power adjustment threshold (%) for voltage rise suppression	The standards of certain countries and regions require that the device generate a certain amount of reactive power when the output voltage exceeds a certain value.	• This parameter is displayed when **Voltage rise suppression** is set to **Enable**. • The value of **Active power derating threshold for voltage rise suppression** must be greater than that of **Reactive power adjustment threshold for voltage rise suppression**.
Active power derating threshold (%) for voltage rise suppression	The standards of certain countries and regions require that the active power of the device be derated based on a certain gradient when the output voltage exceeds a certain value.	-
P-U characteristic curve	The device adjusts P/Pn (the ratio of the active power to the rated power) in real time based on **U/Un(%)** (the ratio of the actual power grid voltage to the rated power grid voltage).	-
P-U characteristic curve adjustment time	Specifies the time from the response to the end of the adjustment based on the P-U curve.	-
Frequency-based control	The standards of certain countries and regions require that if the power grid frequency fluctuates around the rated value, the device needs to fine-tune the active power output based on **Frequency-based adjustment ratio** to help stabilize the power grid frequency. In this case, set this parameter to **Enable**.	-
Frequency-based adjustment ratio	Specifies the adjustment ratio of the active power output.	This parameter is displayed when **Frequency-based control** is set to **Enable**.

 Copyright © Huawei Technologies Co., Ltd.

Parameter	Description	Remarks
Response deadband of frequency-based control	Specifies the threshold for triggering frequency-based control. For example, if this parameter is set to 0.1 Hz, the frequency-based control is not triggered when the frequency is within reference frequency±0.1 Hz.	-
Power change gradient of frequency-based control	Specifies the active power change gradient of frequency-based control.	-
Power change limit of frequency-based control	Specifies the upper limit for active power adjustment in frequency-based control.	-
Delay response time of frequency-based control	Specifies the delay response time of frequency-based control.	-
Overfrequency-caused power derating	If this parameter is set to **Enable**, when the power grid frequency exceeds the frequency threshold for triggering overfrequency-caused power derating, the active power of the device is derated based on a certain gradient.	-

 Copyright © Huawei Technologies Co., Ltd.

Parameter	Description	Remarks
Frequency threshold for stopping overfrequency-caused power derating (Hz)	Specifies the frequency threshold for stopping overfrequency-caused power derating.	• This parameter is displayed when **Overfrequency-caused power derating** is set to **Enable**. • When setting this parameter, ensure that the following condition is met: **Frequency threshold for exiting overfrequency-caused power derating** ≤ **Frequency threshold for triggering overfrequency-caused power derating** < **Frequency threshold for stopping overfrequency-caused power derating**.
Power threshold for stopping overfrequency-caused power derating (%)	Specifies the power threshold for stopping overfrequency-caused power derating.	
Frequency threshold for triggering overfrequency-caused power derating (Hz)	The standards of certain countries and regions require that the output active power of the device be derated when the power grid frequency exceeds a certain value.	
Frequency threshold for exiting overfrequency-caused power derating (Hz)	Specifies the frequency threshold for exiting overfrequency derating.	
Power drop gradient of overfrequency derating (%/s)	Specifies the rate of overfrequency-caused power derating.	
Gradient of power recovery from overfrequency-caused derating (%/min)	Specifies the power recovery rate for overfrequency-caused power derating.	
Frequency detection filter time (ms)	Specifies the frequency detection filter time.	-
Recovery delay of frequency-based active power derating	Specifies the exit delay time after the frequency reaches the frequency threshold for exiting overfrequency-caused power derating.	-
Execution delay of frequency-based active power derating	Specifies the execution delay time of overfrequency-caused power derating after the frequency reaches the frequency threshold for triggering overfrequency-caused power derating.	-
Hysteresis of frequency-based active power derating	Specifies whether to enable the hysteresis of overfrequency-caused power derating.	-

 Copyright © Huawei Technologies Co., Ltd.

Parameter	Description	Remarks
Underfrequency-caused power raising	The standards of certain countries and regions require that the device need to increase the active power output to increase the power grid frequency if the power grid frequency is lower than **Frequency threshold for triggering underfrequency-caused power raising**. In this case, set this parameter to **Enable**.	-
Gradient of underfrequency-caused power raising (%/min)	Specifies the power recovery rate for underfrequency-caused power raising.	This parameter is displayed when **Underfrequency-caused power raising** is set to **Enable**.
Frequency threshold for stopping underfrequency-caused power raising (Hz)	Specifies the frequency threshold for stopping underfrequency-caused power raising.	
Power threshold for stopping underfrequency-caused power raising (%)	Specifies the power threshold for stopping underfrequency-caused power raising.	
Frequency threshold for triggering underfrequency-caused power raising (Hz)	Specifies the frequency threshold for triggering underfrequency-caused power raising.	
Frequency threshold for exiting underfrequency-caused power raising (Hz)	Specifies the frequency threshold for exiting underfrequency-caused power raising.	
O&M via USB connection	Specifies the USB O&M port status: **Always on, Off in idle state**, or **Always off**.	-
USB wakeup	Used to remotely wake up the USB O&M port. After being idle for 4 hours, the port is automatically disabled.	-
Quick startup for short-time grid disconnection	The default value is **Disable**. Specifies whether to allow the device to quickly start after the power grid recovers from a short-time failure.	-

 Copyright © Huawei Technologies Co., Ltd.

Parameter	Description	Remarks
Microgrid compatibility	The default value is **Disable**. The recommended settings are as follows: ● If **Working mode** is set to **VSG** for the PCS or **Scenario** is set to **On-grid**, set this parameter to **Disable**. ● If **Working mode** is set to **PQ** for the PCS and the PCS works in a microgrid that uses a diesel generator or other voltage sources, set this parameter to **Enable**. If this parameter is set to **Enable**, the PCS adaptively changes the output power based on the original grid code and the grid voltage and frequency to support a higher ratio of current sources to voltage sources (that is, PV-to-ESS ratio).	-
Working mode	The default value is **PQ**. ● If **Scenario** is set to **On-grid**, set this parameter to **PQ**. ● If **Scenario** is set to **Off-grid**, set this parameter to **VSG**. ● If **Scenario** is set to **On/Off-grid**, set this parameter to **PQ** or **VSG**.	-
Per unit armature resistance	The default value is **2**. Specifies the resistance per unit value for armature windings of the virtual synchronous generator.	This parameter is displayed when **Working mode** is set to **VSG**. **NOTE** This parameter must be set by professional personnel. Improper settings may cause device exceptions.
Per unit armature inductive reactance	The default value is **1**. Specifies the inductive reactance per unit value for armature windings of the virtual synchronous generator.	
Off-grid VSG Inertia Time Constant	The default value is **0.9**. Specifies the time required for the virtual rotor of the virtual synchronous generator to reach the rated speed from the static state under the rated torque.	
P-F adjustment coefficient	The default value is **1**. Specifies the frequency deviation corresponding to the rated active power of the virtual synchronous generator.	
Q-V adjustment coefficient	The default value is **3**. Specifies the voltage deviation corresponding to the rated reactive power of the virtual synchronous generator.	
P-V adjustment coefficient	The default value is **0**. Specifies the voltage deviation corresponding to the rated active power of the virtual synchronous generator.	
Q-F adjustment coefficient	The default value is **0**. Specifies the frequency deviation corresponding to the rated reactive power of the virtual synchronous generator.	

 Copyright © Huawei Technologies Co., Ltd.

Parameter	Description	Remarks
VSG output voltage correction coefficient	The default value is **100**. Corrects the deviation caused by the transformer ratio error.	
VSG output frequency correction coefficient	The default value is **100**. Corrects the PCS output frequency deviation.	
VSG frequency damping coefficient	The default value is **7.2**. Specifies the power factor that prevents the frequency change of the virtual synchronous generator.	
VSG excitation time constant	The default value is **0**. Specifies the time required for the excitation of the virtual synchronous generator to reach the rated voltage.	
VSG excitation damping coefficient	The default value is **0**. Specifies the power factor that prevents the voltage change of the virtual synchronous generator.	
Wired carrier synchronization	Enables or disables wired carrier synchronization. The default value is **Disable**.	-
Delay compensation for wired carrier synchronization	The default value is **0**. Specifies the value of delay compensation for wired carrier synchronization.	This parameter is displayed when **Wired carrier synchronization** is set to **Enable**.
Wired power frequency synchronization	Enables or disables wired power frequency synchronization. The default value is **Disable**.	-
Delay compensation for wired power frequency synchronization	The default value is **0**. Specifies the value of delay compensation for wired power frequency synchronization.	This parameter is displayed when **Wired power frequency synchronization** is set to **Enable**.
Voltage adjustment value for VSG synchronous control (%)	The default value is **0**. Specifies the adjustment value of the PCS control output voltage in VSG mode.	• Value range: [–10.0, 10.0] • The value is adjusted based on the offset per unit value. For example, if the rated output voltage is 800 V and the output voltage needs to be adjusted to 805 V, the adjustment value is 5/800 x 100%.

 Copyright © Huawei Technologies Co., Ltd.

Parameter	Description	Remarks
Frequency adjustment value for VSG synchronous control (%)	The default value is **0**. Specifies the adjustment value of the PCS output frequency in VSG mode.	● Value range: [–10.0, 10.0] ● The value is adjusted based on the offset per unit value. For example, if the rated output frequency is 50 Hz and the output frequency needs to be adjusted to 50.5 Hz, the adjustment value is 0.5/50 x 100%.
Scenario[1]	Specifies the on-grid/off-grid scenario. The default value is **On-grid**.	Before submitting new settings, you need to enter the login password for authentication.
Harmonic Optimization Type[1]	Specifies harmonic voltage or harmonic current as the object of power quality optimization. The default value is **Harmonic voltage**.	Before submitting new settings, you need to enter the login password for authentication.
Auto switching between working modes[1]	This parameter is applicable only in on-grid or on/off-grid mode. ● **Disable**: On/Off-grid switching cannot be performed automatically. ● **Enable**: On/Off-grid switching can be performed automatically and the PCS does not need to be shut down before the switching.	-
Working mode switching delay	The default value is **60**. Time for other instructions to take effect during PCS working mode switching. The value range is [10, 300] (unit: s).	-

 Copyright © Huawei Technologies Co., Ltd.

Parameter	Description	Remarks
Reactive current compensation bias during LVRT	Specifies the percentage of the reactive compensation current in the rated current during LVRT. The default value is **0.0**, and the value range is [–100.0, 100.0].	This parameter applies only to some models. The actual display may vary. ● **Reactive current compensation bias during LVRT** and **Power dispatching hold time after LVRT** are displayed only when **LVRT** is set to **Enable**. ● **Reactive current compensation bias during HVRT** and **Power dispatching hold time after HVRT** are displayed only when **HVRT** is set to **Enable**.
Reactive current compensation bias during HVRT	Specifies the percentage of the reactive compensation current in the rated current during HVRT. The default value is **0.0**, and the value range is [–100.0, 100.0].	
Power dispatching hold time after LVRT	Specifies the delay for the device to stop the power dispatching response after LVRT. After the stopping state ends, the device starts to respond to the dispatching command. The value range is [0, 60000].	
Power dispatching hold time after HVRT	Specifies the delay for the device to stop the power dispatching response after HVRT. After the stopping state ends, the device starts to respond to the dispatching command. The value range is [0, 60000].	
Anti-rollback	The default setting is **Enable**. ● **Enable**: Enable the anti-rollback function. ● **Disable**: Disable the anti-rollback function.	● This parameter applies only to some models. The actual display may vary. ● If the parameter is set to **Enable**, the software cannot be rolled back to the source version during the software upgrade to prevent vulnerabilities in the source version from being exploited.
Primary working mode automatic switch voltage drop value	Specifies the voltage drop threshold for triggering automatic working mode switching.	-
Primary working mode automatic switch voltage delay time	Specifies the duration threshold of primary voltage drop for triggering working mode switching.	-
Secondary working mode automatic switch voltage drop value	Specifies the voltage drop threshold for triggering automatic working mode switching.	-

 Copyright © Huawei Technologies Co., Ltd.

Parameter	Description	Remarks
PQ/VSG auto switching interval	Specifies the time during which the PCS is not allowed to automatically switch to the VSG mode after it is manually switched to the PQ mode.	-
Gain for VSG sub-synchronous oscillation damping	Specifies the gain coefficient for sub-synchronous oscillation damping.	-
Frequency band for VSG sub-synchronous oscillation damping	Specifies the frequency band for oscillation damping.	-

Power Adjustment

Parameter	Description	Remarks
Schedule instruction valid duration (s)	Specifies the validity period of the scheduling instruction.	When this parameter is set to 0, the scheduling instruction takes effect permanently.
Active power change gradient (%/s)	Specifies the change rate of the device active power.	-
Active power (kW)	Adjusts the active power output of the device by fixed value.	-
Active power (%)	Adjusts the active power output of the device by percentage.	-
Reactive power change gradient (%/s)	Specifies the change rate of the device reactive power.	-
Power factor	Specifies the power factor of the device.	-
Reactive power compensation (Q/S)	Specifies the reactive power of the device.	-
No-load power calibration	Power used by the PCS to compensate for the SOC loss. A negative value indicates that the output is compensated from the AC side of the PCS to the DC side.	-
Reactive power at night	In some specific application scenarios, a power grid company requires that the device can perform reactive power compensation at night to ensure that the power factor of the local power grid meets requirements.	This parameter is displayed when **Isolation** is set to **Input ungrounded (with TF)**.

 Copyright © Huawei Technologies Co., Ltd.

Parameter	Description	Remarks
Enable reactive power parameters at night	If this parameter is set to **Enable**, the device outputs reactive power based on the setting of **Reactive power output at night**. Otherwise, the device executes the remote scheduling command.	This parameter is displayed when **Reactive power at night** is set to **Enable**.
Fixed nighttime reactive power	The device outputs reactive power based on this value if there is no remote scheduling command, **Reactive power at night** is set to **Enable**, and the DC input is disconnected.	-
Q-U characteristic curve	The device adjusts Q/S (the ratio of the output reactive power to apparent power) in real time based on **U/Un(%)** (the ratio of the actual power grid voltage to the rated power grid voltage).	-
Q-U characteristic curve mode	Specifies the reactive power compensation mode of the device output.	-
Delay for Q-U characteristic curve to take effect	Specifies the delay time for Q-U adjustment.	-
Power percentage for triggering Q-U scheduling	Specifies the reference apparent power in percentage. When the actual apparent power of the device is greater than the value of this parameter, the Q-U characteristic curve scheduling function is enabled.	-
Power percentage for exiting Q-U scheduling	Specifies the P/Pn when the device exits the Q-U scheduling.	-
Minimum PF of Q-U characteristic curve	Specifies the minimum power factor for Q-U adjustment.	-
Q-P characteristic curve	The device adjusts Q/Pmax (the ratio of the reactive power to the maximum active power) in real time based on **P/Pmax** (the ratio of the active power to the maximum active power).	-
PF-U characteristic curve	The device adjusts the power factor in real time based on **U/Un(%)** (the ratio of the actual power grid voltage to the rated power grid voltage).	-
PF-U voltage detection filter time	Specifies the time for filtering the grid voltage in the PF-U curve.	-
cosϕ-P/Pn characteristic curve	The device adjusts the output power factor cosϕ in real time based on P/Pn(%).	-

 Copyright © Huawei Technologies Co., Ltd.

Parameter	Description	Remarks
cosϕ-P/Pn trigger voltage	Specifies the voltage threshold for triggering reactive power compensation based on the cosϕ-P curve.	-
cosϕ-P/Pn exit voltage	Specifies the voltage threshold for exiting reactive power compensation based on the cosϕ-P curve.	-
Reactive power adjustment time	Specifies the adjustment time for the reactive power to reach the target value during reactive power adjustment.	-
Active Power Frequency Regulation Coefficient in Grid Forming Mode	Specifies the preset frequency of the frequency regulation deadband.	-
Reactive Power Voltage Regulation Deadband in Grid Forming Mode	Specifies the preset voltage of the voltage regulation deadband.	-
Active Power Frequency Regulation Coefficient in Grid Forming Mode	Specifies the ratio of the per unit value of the active power variation to the per unit value of the frequency variation for the frequency regulation. Value range: [0.0, 200.0].	-
Reactive Power Voltage Regulation Coefficient in Grid Forming Mode	Specifies the ratio of the per unit value of the reactive power variation to the per unit value of the root mean square voltage variation for the voltage regulation. Value range: [0.0, 50.0].	-
Upper limit of active power variation for frequency regulation in grid forming mode (%)	Specifies the maximum percentage of the active power variation for the frequency regulation. The upper limit can be set to the per unit value of **Active Power Baseline**. The default value is **25**, and the value range is [0.0, 100.0].	-
Upper limit of reactive power variation for voltage regulation in grid forming mode (%)	Specifies maximum percentage of the reactive power variation for the voltage regulation. The upper limit can be set to three times the per unit value of **Apparent Power Baseline**. The default value is **150**, and the value range is [0.0, 300.0].	-
On-grid VSG Inertia Time Constant	Specifies the time required for the virtual rotor of the GFM-related virtual synchronous generator to reach the rated speed from the static state under the rated torque. The default value is **12**, and the value range is [0.0, 20.0].	-

 Copyright © Huawei Technologies Co., Ltd.

Parameter	Description	Remarks
Lower limit of active power variation for frequency regulation in grid forming mode (%)	Specifies the minimum percentage of the active power variation for the frequency regulation. The lower limit can be set to the per unit value of **Active Power Baseline**. The default value is **-25**, and the value range is [-100.0, 0.0].	-
Lower limit of reactive power variation for voltage regulation in grid forming mode (%)	Specifies the minimum percentage of the reactive power variation for the frequency regulation. The lower limit can be set to three times the per unit value of **Apparent Power Baseline**. The default value is **-150**, and the value range is [-300.0, 0.0].	-

Power Baseline

Parameter	Description
Apparent power baseline	Specifies the apparent power baseline for power scheduling. The value cannot be greater than the maximum apparent power.
Active power baseline	Specifies the active power baseline for power scheduling. The value cannot be greater than the maximum active power.

Adjustment

Parameter	Description
Total energy yield adjustment	A calibrating coefficient for the total energy yield to ensure that the reported energy yield is consistent with the actual energy yield at the grid connection point
Adjusted total power supply from grid	A calibrating coefficient for the total power supply from the grid to ensure that the reported amount of power supplied from the grid is consistent with the actual power supply at the grid connection point

6.3.10.2 Characteristic Curve

Choose **Monitoring** > **PCS** > **Characteristic Curve**, set characteristic curve parameters, and click **Submit**.

 Copyright © Huawei Technologies Co., Ltd.

Characteristic Curve Name	Setting Description
LVRT characteristic curve	Configure this characteristic curve based on the power grid standard. **NOTE** The SmartLogger supports only the curve configuration for LVRT that lasts no more than 60s. If a power grid standard requires that LVRT be longer than 60s, **LVRT characteristic curve** is not displayed for the grid code.
Voltage rise suppression P-U curve	1. This parameter is displayed when **Voltage rise suppression** is set to **Enable**. 2. Configure this characteristic curve based on the power grid standard.

6.3.11 Setting PCS Parameters (213KTL-H0)

PCS parameter settings in this section apply to the LUNA2000-213KTL-H0.

Procedure

Choose **Monitoring** > **PCS** > **Running Param**, set running parameters, and click **Submit**.

NOTICE

- Before setting the running parameters of the Smart PCS, ensure that the DC side of the Smart PCS is powered on.
- The parameter list provided in this document includes all configurable parameters which may vary depending on scenarios. The actual display may vary.
- If the SmartLogger generates a PCS parameter inconsistency alarm, check the VSG or GFM parameters based on the alarm information (you can view the parameters in the SmartLogger logs), and synchronize the PCS parameters in batches. After the synchronization, the alarm is cleared.

Grid Parameters

Parameter	Description	Remarks
Grid code	Set this parameter based on the grid code of the country or region where the device is used.	After this parameter is set, the device restarts.
Voltage level	Set the voltage level of the power grid.	-
Frequency level	Set the frequency level of the power grid.	-
Output mode	Specifies the supported power grid types.	After this parameter is set, the device restarts.

 Copyright © Huawei Technologies Co., Ltd.

Parameter	Description	Remarks
Isolation settings	Specifies the device grounding status on the DC side and the connection to the power grid.	
Auto start upon grid recovery	Specifies whether to allow the device to automatically start after the power grid recovers.	-
On-grid recovery time (s)	Specifies the time after which the device begins restarting after the power grid recovers.	-
Quick startup for short-time grid disconnection	Specifies whether to allow the device to quickly start after the power grid recovers from a short-time failure.	-
Duration for determining short-time grid disconnection (ms)	The standards of certain countries and regions require that the device should not disconnect from the power grid if the power grid experiences a short-time failure. After the fault is rectified, the device output power needs to be quickly restored.	This parameter is displayed when **Quick startup after short-time grid disconnection** is set to **Enable**.
Soft start time after grid failure (s)	Specifies the time for the power to gradually increase when the device restarts after the power grid recovers.	-
Grid reconnection voltage upper limit (V)	According to the standards of certain countries and regions, grid reconnection is not allowed when the grid voltage is higher than the maximum voltage for grid reconnection.	-
Grid reconnection voltage lower limit (V)	According to the standards of certain countries and regions, grid reconnection is not allowed when the grid voltage is lower than the minimum grid voltage for grid reconnection.	-
Grid reconnection frequency upper limit (Hz)	According to the standards of certain countries and regions, grid reconnection is not allowed when the grid frequency is higher than the maximum grid frequency for grid reconnection.	-
Grid reconnection frequency lower limit (Hz)	According to the standards of certain countries and regions, grid reconnection is not allowed when the grid frequency is lower than the minimum grid frequency for grid reconnection.	-
Upper voltage threshold (V) for grid connection	According to the standards of certain countries and regions, initial grid connection is not allowed when the grid voltage is higher than the maximum voltage for grid connection.	-
Lower voltage threshold (V) for grid connection	According to the standards of certain countries and regions, initial grid connection is not allowed when the grid voltage is lower than the minimum voltage for grid connection.	-

 Copyright © Huawei Technologies Co., Ltd.

Parameter	Description	Remarks
Upper frequency threshold (Hz) for grid connection	According to the standards of certain countries and regions, initial grid connection is not allowed when the grid frequency is higher than the maximum frequency for grid connection.	-
Lower frequency threshold (Hz) for grid connection	According to the standards of certain countries and regions, initial grid connection is not allowed when the grid frequency is lower than the minimum frequency for grid connection.	-
Grid automatic reconnection time	Specifies the time after which the device begins restarting after the power grid recovers.	-

Protection Parameters

Parameter	Description	Remarks
Insulation resistance protection threshold (MΩ)	To ensure device safety, the device detects the insulation resistance of the DC side to the ground when it starts a self-check. If the detected value is less than the preset value, the device does not connect to the grid nor start. The recommended value range is [0.05, 1.5].	-
Active islanding protection	Specifies whether to enable the active islanding protection function.	-
Passive islanding protection	Specifies whether to enable the passive islanding protection function.	-
Unbalance voltage protection (%)	Specifies the device protection threshold when the power grid voltage is unbalanced.	-
Phase protection threshold (°)	The Japanese standard requires that during passive islanding detection, the protection should be triggered if an abrupt voltage phase change is detected.	-
Phase angle offset protection	The standards of certain countries and regions require that the device needs to be protected when the phase angle offset of the power grid three phases exceeds a certain value.	-
10-minute UV protection	Specifies the 10-minute undervoltage protection threshold.	-
10-minute UV protection time	Specifies the 10-minute undervoltage protection duration.	-
10 minute OV protection (V)	Specifies the 10-minute overvoltage protection threshold. Value range: [800, 1000] V.	-

 Copyright © Huawei Technologies Co., Ltd.

Parameter	Description	Remarks
10 minute OV protection time (ms)	Specifies the 10-minute overvoltage protection duration.	-

Parameter	Description	Remarks
Level-N OV protection (V)	Specifies the level-N grid overvoltage protection threshold.	• N can be 1, 2, 3, 4, 5, or 6. • Level-1 overvoltage protection threshold ≤ Level-2 overvoltage protection threshold ≤ Level-3 overvoltage protection threshold ≤ Level-4 overvoltage protection threshold ≤ Level-5 overvoltage protection threshold ≤ Level-6 overvoltage protection threshold • Duration threshold for level-1 overvoltage protection ≥ Duration threshold for level-2 overvoltage protection ≥ Duration threshold for level-3 overvoltage protection ≥ Duration threshold for level-4 overvoltage protection ≥ Duration threshold for level-5 overvoltage protection ≥ Duration threshold for level-6 overvoltage protection • Level-1 undervoltage protection threshold ≥ Level-2 undervoltage protection threshold ≥ Level-3 undervoltage protection threshold ≥ Level-4 undervoltage protection threshold ≥ Level-5 undervoltage protection threshold ≥ Level-6 undervoltage protection threshold • Duration threshold for level-1 undervoltage protection ≥ Duration threshold for level-2 undervoltage protection ≥ Duration threshold for level-3 undervoltage
Level-N OV protection time (ms)	Specifies the level-N grid overvoltage protection duration.	
Level-N UV protection (V)	Specifies the level-N grid undervoltage protection threshold.	
Level-N UV protection time (ms)	Specifies the level-N grid undervoltage protection duration.	

Copyright © Huawei Technologies Co., Ltd.

Parameter	Description	Remarks
		protection ≥ Duration threshold for level-4 undervoltage protection ≥ Duration threshold for level-5 undervoltage protection ≥ Duration threshold for level-6 undervoltage protection
Frequency change rate protection	If this parameter is set to **Enable**, the device is protected when the power grid frequency changes too fast.	-
Frequency change rate protection threshold (Hz/s)	Specifies the frequency change rate protection threshold.	This parameter is displayed when **Frequency change rate protection** is set to **Enable**.
Duration threshold (s) for frequency change rate protection	The device is protected when the grid frequency change duration exceeds the value.	

 Copyright © Huawei Technologies Co., Ltd.

Parameter	Description	Remarks
Level-N OF protection (Hz)	Specifies the level-N grid overfrequency protection threshold.	• N can be 1, 2, 3, 4, 5, or 6. • Level-1 overfrequency protection threshold ≤ Level-2 overfrequency protection threshold ≤ Level-3 overfrequency protection threshold ≤ Level-4 overfrequency protection threshold ≤ Level-5 overfrequency protection threshold ≤ Level-6 overfrequency protection threshold • Duration threshold for level-1 overfrequency protection ≥ Duration threshold for level-2 overfrequency protection ≥ Duration threshold for level-3 overfrequency protection ≥ Duration threshold for level-4 overfrequency protection ≥ Duration threshold for level-5 overfrequency protection ≥ Duration threshold for level-6 overfrequency protection • Level-1 underfrequency protection threshold ≥ Level-2 underfrequency protection threshold ≥ Level-3 underfrequency protection threshold ≥ Level-4 underfrequency protection threshold ≥ Level-5 underfrequency protection threshold ≥ Level-6 underfrequency protection threshold • Duration threshold for level-1 underfrequency protection ≥ Duration threshold for level-2 underfrequency
Level-N OF protection time (ms)	Specifies the level-N grid overfrequency protection duration.	
Level-N UF protection (Hz)	Specifies the level-N grid underfrequency protection threshold.	
Level-N UF protection time (ms)	Specifies the level-N grid underfrequency protection duration.	

Copyright © Huawei Technologies Co., Ltd.

Parameter	Description	Remarks
		protection ≥ Duration threshold for level-3 underfrequency protection ≥ Duration threshold for level-4 underfrequency protection ≥ Duration threshold for level-5 underfrequency protection ≥ Duration threshold for level-6 underfrequency protection

Feature Parameters

Parameter	Description	Remarks
Working mode	The default value is **PQ**. ● If **Scenario** is set to **On-grid**, set this parameter to **PQ**. ● If **Scenario** is set to **Off-grid**, set this parameter to **VSG**. ● If **Scenario** is set to **On/Off-grid**, set this parameter to **PQ** or **VSG**.	-
Auto switching between working modes	This parameter is applicable only in on-grid or on/off-grid mode. ● **Disable**: On/Off-grid switching cannot be performed automatically. ● **Enable**: On/Off-grid switching can be performed automatically and the PCS does not need to be shut down before the switching.	-
Working mode switching delay	The default value is **60**. Time for other instructions to take effect during PCS working mode switching. The value range is [10, 300] (unit: s).	-
Working mode switching delay	Specifies the delay time for online switching between VSG and PQ.	-

 Copyright © Huawei Technologies Co., Ltd.

Parameter	Description	Remarks
Microgrid compatibility	The default value is **Disable**. The recommended settings are as follows: ● If **Working mode** is set to **VSG** for the PCS or **Scenario** is set to **On-grid**, set this parameter to **Disable**. ● If **Working mode** is set to **PQ** for the PCS and the PCS works in a microgrid that uses a diesel generator or other voltage sources, set this parameter to **Enable**. If this parameter is set to **Enable**, the PCS adaptively changes the output power based on the original grid code and the grid voltage and frequency to support a higher ratio of current sources to voltage sources (that is, PV-to-ESS ratio).	-
Output impedance enhancement	After **Output impedance enhancement** is enabled, you can set **Frequency to which output impedance enhancement applies** to increase the output impedance at this frequency.	-
Frequency to which output impedance enhancement applies	Specifies the frequency to which output impedance enhancement applies.	This parameter is displayed when **Output impedance enhancement** is set to **Enable**.
Insulation resistance detection mode	Set this parameter to **Enable** or **Disable**.	-
Power control priority	● If this parameter is set to **Active power first**, the device preferentially ensures active power output. ● If this parameter is set to **Reactive power first**, the device preferentially ensures reactive power output.	-
Overload Enhanced Mode	The default value is **Disable**. If this parameter is set to **Enable**, the power overload capability will be enabled for a short period of time.	-
Soft start time (s)	Specifies the duration for the power to gradually increase until the device starts.	-
Shutdown gradient (%/s)	Specifies the power change rate until the device shuts down.	-

 Copyright © Huawei Technologies Co., Ltd.

Parameter	Description	Remarks
Shutdown at 0% power limit	● If this parameter is set to **Enable**, the device shuts down after receiving the 0% power limit command. ● If this parameter is set to **Disable**, the device does not shut down after receiving the 0% power limit command.	-
CAN termination resistor	Specifies the CAN termination resistor.	-
Anti-rollback	The default setting is **Enable**. ● **Enable**: Enable the anti-rollback function. ● **Disable**: Disable the anti-rollback function.	● This parameter applies only to some models. The actual display may vary. ● If the parameter is set to **Enable**, the software cannot be rolled back to the source version during the software upgrade to prevent vulnerabilities in the source version from being exploited.
O&M via USB connection	Specifies the USB O&M port status: **Always on, Off in idle state**, or **Always off**.	-
USB wakeup	Used to remotely wake up the USB O&M port. After being idle for 4 hours, the port is automatically disabled.	-
Safety mode	Set this parameter to **On** or **Exit**.	-
Communication interruption duration	Specifies the duration for determining communication interruption between the device and the SmartLogger.	-
Shutdown on communication failure	The standards of certain countries and regions require that the device shut down after the communication is interrupted for a certain time.	If this parameter is set to **Enable**, the device automatically shuts down after the **Communication interruption duration** is reached.
Automatic startup upon communication recovery	If this parameter is set to **Enable**, the device automatically starts after communication recovers. If this parameter is set to **Disable**, the device needs to be started manually after communication recovers.	This parameter is displayed when the **Shutdown on communication failure** is set to **Enable**.

 Copyright © Huawei Technologies Co., Ltd.

Parameter	Description	Remarks
Protection upon communication failure	**Enable**: In the feed-in limitation scenario, if the device is disconnected from the SmartLogger or Smart Dongle for a period longer than the **Communication disconnection detection time**, the inverter will derate the active power. **Disable**: Protection upon communication failure is disabled. After being disconnected from the SmartLogger or Smart Dongle, the device continues to operate in the same way as before the disconnection. If **Automatic OFF due to communication interrupted** is set to **Enable** (the default value is **Disable**), the device shuts down once it is disconnected from the SmartLogger or Smart Dongle.	-
Communication disconnection detection time (s)	Specifies the detection time for protection upon a communication failure between the device and the SmartLogger or Smart Dongle.	This parameter is displayed when **Protection upon communication failure** is set to **Enable**.
Active power mode when communication fails	Specifies the protection mode of the active power after the communication is interrupted. The value can be **Percentage** or **Fixed value**.	
Active power threshold (%) when communication fails [high precision]	Specifies the threshold of the device's rated active power in percentage.	This parameter is displayed when **Protection upon communication failure** is set to **Enable** and **Active power mode when communication fails** is set to **Percentage**.
Active power threshold (kW) when communication fails [high precision]	Specifies the active power threshold as a fixed value.	This parameter is displayed when **Protection upon communication failure** is set to **Enable** and **Active power mode when communication fails** is set to **Fixed value**.
Reactive power mode when communication fails	Specifies the protection mode of the reactive power after the communication is interrupted. The value can be **Q/S** or **Power factor**.	This parameter is displayed when **Protection upon communication failure** is set to **Enable**.

 Copyright © Huawei Technologies Co., Ltd.

Parameter	Description	Remarks
Reactive power threshold (PF) when communication fails	Specifies the power factor threshold of the reactive power.	This parameter is displayed when **Protection upon communication failure** is set to **Enable** and **Reactive power mode when communication fails** is set to **Power factor**.
Reactive power threshold (Q/S) when communication fails [high precision]	Specifies the Q/S threshold of the reactive power.	This parameter is displayed when **Protection upon communication failure** is set to **Enable** and **Reactive power mode when communication fails** is set to **Q/S**.
Harmonic optimization type	Specifies harmonic voltage or harmonic current as the object of power quality optimization. The default value is **Harmonic voltage**.	This parameter is displayed when **Scenario** is set to **On-grid** and **Working mode** is set to **VSG**.
Standby mode	When there is no scheduling, the Smart PCS enters the hot standby mode based on the battery status to reduce system loss. ● **Zero-power operation**: no hot standby ● **Seam hot standby**: After the Smart PCS enters the hot standby mode, the relay on the AC side will be disconnected. ● **Seamless hot standby**: After the Smart PCS enters the hot standby mode, the relay on the AC side will not be disconnected. The reactive power of the ports needs to be supplemented.	Set this parameter as required.
Per unit armature resistance	The default value is **2**. Specifies the resistance per unit value for armature windings of the virtual synchronous generator.	This parameter is displayed when **Working mode** is set to **VSG**. **NOTE** This parameter must be set by professional personnel. Improper settings may cause device exceptions.
Per unit armature inductive reactance	The default value is **1**. Specifies the inductive reactance per unit value for armature windings of the virtual synchronous generator.	
Off-grid VSG inertia time constant	The default value is **0.9**. Specifies the time required for the virtual rotor of the virtual synchronous generator to reach the rated speed from the static state under the rated torque.	

 Copyright © Huawei Technologies Co., Ltd.

Parameter	Description	Remarks
P-F adjustment coefficient	The default value is **1.8**. Specifies the frequency deviation corresponding to the rated active power of the virtual synchronous generator.	
Q-V adjustment coefficient	The default value is **1.2**. Specifies the voltage deviation corresponding to the rated reactive power of the virtual synchronous generator.	
P-V adjustment coefficient	The default value is **0**. Specifies the voltage deviation corresponding to the rated active power of the virtual synchronous generator.	
Q-F adjustment coefficient	The default value is **1**. Specifies the frequency deviation corresponding to the rated reactive power of the virtual synchronous generator.	
VSG output voltage correction coefficient	The default value is **100**. Corrects the deviation caused by the transformer ratio error.	
VSG output frequency correction coefficient	The default value is **100**. Corrects the PCS output frequency deviation.	
VSG frequency damping coefficient	The default value is **7.2**. Specifies the power factor that prevents the frequency change of the virtual synchronous generator.	
VSG excitation time constant	The default value is **0**. Specifies the time required for the excitation of the virtual synchronous generator to reach the rated voltage.	
VSG excitation damping coefficient	The default value is **0**. Specifies the power factor that prevents the voltage change of the virtual synchronous generator.	
Wired carrier synchronization	Enables or disables wired carrier synchronization. The default value is **Disable**.	-
Delay compensation for wired carrier synchronization	The default value is **0.5**. Specifies the value of delay compensation for wired carrier synchronization.	This parameter is displayed when **Wired carrier synchronization** is set to **Enable**.
Wired power frequency synchronization	Enables or disables wired power frequency synchronization. The default value is **Disable**.	-

 Copyright © Huawei Technologies Co., Ltd.

Parameter	Description	Remarks
Delay compensation for wired power frequency synchronization	The default value is **0.5**. Specifies the value of delay compensation for wired power frequency synchronization.	This parameter is displayed when **Wired power frequency synchronization** is set to **Enable**.
LVRT	LVRT is short for low voltage ride-through. When the grid voltage is abnormally low for a short time, the device cannot disconnect from the power grid immediately and has to work for some time.	-
LVRT triggering threshold (V)	Specifies the threshold for triggering LVRT. The threshold settings should meet the local grid standard.	This parameter is displayed when **LVRT** is set to **Enable**.
Positive-sequence reactive power compensation factor in LVRT	During LVRT, the device needs to generate positive-sequence reactive power to support the power grid. This parameter is used to set the positive-sequence reactive power generated by the device. For example, if you set this parameter to **2**, the increment of positive-sequence reactive current generated by the device is 20% of the rated current when the AC voltage decreases by 10% during LVRT.	
Negative-sequence reactive power compensation factor in LVRT	During LVRT, the device needs to generate negative-sequence reactive power to support the power grid. This parameter is used to set the negative-sequence reactive power generated by the device. For example, if you set this parameter to **2**, the increment of negative-sequence reactive current generated by the device is 20% of the rated current when the AC voltage decreases by 10% during LVRT.	
LVRT active current maintenance coefficient	Specifies the active current proportional coefficient before and during LVRT.	
LVRT reactive current limiting (%)	During LVRT, the device needs to limit the reactive current. For example, if you set this parameter to **50**, the reactive current upper limit of the device is 50% of the rated current during LVRT.	

 Copyright © Huawei Technologies Co., Ltd.

Parameter	Description	Remarks
Threshold of LVRT zero-current mode	If **Zero-current mode on power grid fault** is enabled and the power grid voltage is less than **Threshold of LVRT zero-current mode** during LVRT, the zero-current mode is used. Otherwise, the mode set in LVRT mode is used.	
LVRT mode	Specifies the LVRT mode. The options are **Zero-current mode**, **Constant current mode**, **Reactive power priority mode**, and **Active power priority mode**.	
Positive-sequence reactive current limit during asymmetric LVRT (%)	During asymmetric LVRT, the device needs to limit the positive-sequence reactive current.	
Compensation angle during ZVRT	By default, this function is enabled for China's national standards and disabled for other standards.	
Reactive current compensation bias during LVRT	Specifies the percentage of the reactive compensation current in the rated current during LVRT.	
Power dispatching hold time after LVRT	Specifies the delay for the device to stop the power dispatching response after LVRT. After the stopping state ends, the device starts to respond to the dispatching command.	
LVRT characteristic curve	Specifies the LVRT capability of the device.	-
LVRT in grid forming mode	Specifies whether to enable **LVRT in grid forming mode**.	This parameter is displayed when **LVRT** is set to **Enable**, **Working mode** is set to **VSG**, and **Scenario** is set to **On-grid**.
LVRT priority in grid forming mode	Set this parameter to **Voltage regulation first** or **Frequency regulation first**.	This parameter is displayed when **LVRT** is set to **Enable**, **Working mode** is set to **VSG**, **Scenario** is set to **On-grid**, and **LVRT in grid forming mode** is set to **Enable**.
Voltage regulation type of LVRT in grid forming mode	Set this parameter to **Reactive power regulation** or **Reactive current regulation**.	
Voltage regulation coefficient of LVRT in grid forming mode	Specifies the voltage-reactive droop coefficient during LVRT.	

 Copyright © Huawei Technologies Co., Ltd.

Parameter	Description	Remarks
Minimum LVRT duration in grid forming mode	Specifies the minimum duration of LVRT.	
Negative-sequence reactive current limit during VRT (%)	During asymmetric LVRT, the device needs to limit the negative-sequence reactive current.	This parameter is displayed when **LVRT** or **HVRT** is set to **Enable**.
Min. active current during VRT (%)	During voltage ride-through (VRT), the device needs to limit the min. active current.	
Deactivate grid voltage protection during HVRT/LVRT	Specifies whether to shield the voltage protection function during LVRT or HVRT.	
VRT exit hysteresis threshold	Specifies the LVRT/HVRT recovery threshold. ● LVRT recovery threshold = LVRT threshold + VRT exit hysteresis threshold ● HVRT recovery threshold = HVRT threshold – VRT exit hysteresis threshold	
VRT active current limiting (%)	Specifies the percentage of the maximum active current to the rated current during fault ride-through (FRT).	
VRT active power recovery gradient	Specifies the recovery rate when the active current is restored to the value at the moment before fault ride-through.	
Zero-current mode on power grid fault	Specifies whether to enable the function of working in zero-current mode upon a power grid fault.	
Grid voltage trip triggering threshold	This parameter can be set only for the VDE4120.	
HVRT	HVRT is short for high voltage ride-through. When the grid voltage is abnormally high for a short time, the device cannot disconnect from the power grid immediately and has to work for some time.	-
HVRT triggering threshold (V)	Specifies the threshold for triggering HVRT. The threshold settings should meet the local grid standard.	This parameter is displayed when **HVRT** is set to **Enable**.

 Copyright © Huawei Technologies Co., Ltd.

Parameter	Description	Remarks
Positive-sequence reactive power compensation factor in HVRT	During HVRT, the device needs to generate positive-sequence reactive power to support the power grid. This parameter is used to set the positive-sequence reactive power generated by the device. For example, if you set this parameter to **2**, the increment of positive-sequence reactive current generated by the device is 20% of the rated current when the AC voltage increases by 10% during HVRT.	
Negative-sequence reactive power compensation factor in HVRT	During HVRT, the device needs to generate negative-sequence reactive power to support the power grid. This parameter is used to set the negative-sequence reactive power generated by the device. For example, if you set this parameter to **2**, the increment of negative-sequence reactive current generated by the device is 20% of the rated current when the AC voltage increases by 10% during HVRT.	
Reactive current limit during HVRT (%)	During HVRT, the device needs to limit the reactive current.	
Reactive current compensation bias during HVRT	Specifies the percentage of the reactive compensation current in the rated current during HVRT.	
Power dispatching hold time after HVRT	Specifies the delay for the device to stop the power dispatching response after HVRT. After the stopping state ends, the device starts to respond to the dispatching command.	
HVRT characteristic curve	Specifies the HVRT capability of the device.	
HVRT in grid forming mode	Specifies whether to enable **HVRT in grid forming mode**.	This parameter is displayed when **HVRT** is set to **Enable**, **Working mode** is set to **VSG**, and **Scenario** is set to **On-grid**.

 Copyright © Huawei Technologies Co., Ltd.

Parameter	Description	Remarks
HVRT priority in grid forming mode	Set this parameter to **Reactive power first** or **Active power first**.	This parameter is displayed when **HVRT** is set to **Enable**, **Working mode** is set to **VSG**, **Scenario** is set to **On-grid**, and **HVRT in grid forming mode** is set to **Enable**.
Voltage regulation type of HVRT in grid forming mode	Set this parameter to **Reactive power regulation** or **Reactive current regulation**.	
Voltage regulation coefficient of HVRT in grid forming mode	Specifies the voltage-reactive droop coefficient during HVRT.	
Minimum HVRT duration in grid forming mode	Specifies the minimum duration of HVRT.	
Grid phase loss adaptability	This function is used to keep the PCS operating in on-grid mode when an open phase fault occurs. By default, this function is enabled for China's national standards and disabled for other standards.	-
Voltage rise suppression	The standards of certain countries and regions require that the device suppress voltage rise by outputting reactive power and reducing active power when the output voltage exceeds a certain value.	-
Reactive power adjustment threshold (%) for voltage rise suppression	The standards of certain countries and regions require that the device generate a certain amount of reactive power when the output voltage exceeds a certain value.	• This parameter is displayed when **Voltage rise suppression** is set to **Enable**. • The value of **Active power derating threshold for voltage rise suppression** must be greater than that of **Reactive power adjustment threshold for voltage rise suppression**.
Active power derating threshold (%) for voltage rise suppression	The standards of certain countries and regions require that the active power of the device be derated based on a certain gradient when the output voltage exceeds a certain value.	
P-U characteristic curve	The device adjusts P/Pn (the ratio of the active power to the rated power) in real time based on **U/Un(%)** (the ratio of the actual power grid voltage to the rated power grid voltage).	
P-U characteristic curve adjustment time	Specifies the time from the response to the end of the adjustment based on the P-U curve.	

 Copyright © Huawei Technologies Co., Ltd.

Parameter	Description	Remarks
Frequency-based control	The standards of certain countries and regions require that if the power grid frequency fluctuates around the rated value, the device needs to fine-tune the active power output based on **Frequency-based adjustment ratio** to help stabilize the power grid frequency. In this case, set this parameter to **Enable**.	-
Frequency Adaptation	The default value is **Disable**. If this parameter is set to **Enable**, the PCS should not be in the discharging state when the power grid frequency is higher than a certain threshold; and the PCS should not be in the charging state when the power grid frequency is lower than a certain threshold.	-
Frequency-based adjustment ratio	Specifies the adjustment ratio of the active power output.	This parameter is displayed when **Frequency-based control** is set to **Enable**.
Frequency-based adjustment ratio [high precision]	Specifies the adjustment ratio of the active power output.	
Response deadband of frequency-based control	Specifies the threshold for triggering frequency-based control. For example, if this parameter is set to 0.1 Hz, the frequency-based control is not triggered when the frequency is within reference frequency±0.1 Hz.	
Power change gradient of frequency-based control	Specifies the active power change gradient of frequency-based control.	
Power change limit of frequency-based control	Specifies the lower and upper limits for active power adjustment in frequency-based control.	
Upper power change limit of frequency-based control	Specifies the upper limit for active power adjustment in frequency-based control.	
Lower power change limit of frequency-based control	Specifies the lower limit for active power adjustment in frequency-based control.	
Delay response time of frequency-based control	Specifies the delay response time of frequency-based control.	

 Copyright © Huawei Technologies Co., Ltd.

Parameter	Description	Remarks
Overfrequency-caused power derating	If this parameter is set to **Enable**, when the power grid frequency exceeds the frequency threshold for triggering overfrequency-caused power derating, the active power of the device is derated based on a certain gradient.	-
Frequency threshold for stopping overfrequency-caused power derating (Hz)	Specifies the frequency threshold for stopping overfrequency-caused power derating.	• This parameter is displayed when **Overfrequency-caused power derating** is set to **Enable**. • When setting this parameter, ensure that the following condition is met: **Frequency threshold for exiting overfrequency-caused power derating** < **Frequency threshold for triggering overfrequency-caused power derating** < **Frequency threshold for stopping overfrequency-caused power derating**.
Power threshold for stopping overfrequency-caused power derating (%)	Specifies the power threshold for stopping overfrequency-caused power derating.	
Frequency threshold for triggering overfrequency-caused power derating (Hz)	The standards of certain countries and regions require that the output active power of the device be derated when the power grid frequency exceeds a certain value.	
Frequency threshold for exiting overfrequency-caused power derating (Hz)	Specifies the frequency threshold for exiting overfrequency-caused power derating.	
Gradient of overfrequency-caused power derating (%/s)	Specifies the rate of overfrequency-caused power derating.	
Gradient of power recovery from overfrequency-caused derating (%/min)	Specifies the power recovery rate for overfrequency-caused power derating.	
Underfrequency-caused power raising	The standards of certain countries and regions require that if the power grid frequency is lower than **Frequency threshold for triggering underfrequency-caused power raising**, the device needs to increase the active power output to increase the power grid frequency. In this case, set this parameter to **Enable**.	-

 Copyright © Huawei Technologies Co., Ltd.

Parameter	Description	Remarks
Gradient of underfrequency-caused power raising (%/min)	Specifies the power recovery rate for underfrequency-caused power raising.	• This parameter is displayed when **Underfrequency-caused power raising** is set to **Enable**. • The setting must meet the following condition: **Frequency threshold for stopping underfrequency-caused power raising** < **Frequency threshold for triggering underfrequency-caused power raising** < **Frequency threshold for exiting underfrequency-caused power raising**
Frequency threshold for stopping underfrequency-caused power raising (Hz)	Specifies the frequency threshold for stopping underfrequency-caused power raising.	
Power threshold for stopping underfrequency-caused power raising (%)	Specifies the power threshold for stopping underfrequency-caused power raising.	
Frequency threshold for triggering underfrequency-caused power raising (Hz)	Specifies the frequency threshold for triggering underfrequency-caused power raising.	
Frequency threshold for exiting underfrequency-caused power raising (Hz)	Specifies the frequency threshold for exiting underfrequency-caused power raising.	
Delay of underfrequency-caused power raising	Specifies the delay from the time when the underfrequency-caused power raising function is triggered to the time when the function takes effect.	
Frequency detection filter time (ms)	Specifies the frequency detection filter time.	This parameter is displayed when **Frequency-based control**, **Underfrequency-caused power raising**, or **Overfrequency-caused power derating** is set to **Enable**.
Recovery delay of frequency-based active power derating	Specifies the exit delay time after the frequency reaches the frequency threshold for exiting overfrequency-caused power derating.	
Execution delay of frequency-based active power derating	Specifies the execution delay time of overfrequency-caused power derating after the frequency reaches the frequency threshold for triggering overfrequency-caused power derating.	

 Copyright © Huawei Technologies Co., Ltd.

Parameter	Description	Remarks
Hysteresis of frequency-based active power derating	Specifies whether to enable the hysteresis of overfrequency-caused power derating.	
Active power frequency regulation coefficient in grid forming mode	Specifies the ratio of the per unit value of the active power variation to the per unit value of the frequency variation for the frequency regulation.	-
Active power frequency regulation deadband in grid forming mode	Specifies the preset frequency of the frequency regulation deadband.	-
Active power frequency	Specifies the active power baseline in grid forming mode, which is used for frequency regulation command control.	-
Upper limit of active power variation for frequency regulation in grid forming mode (%)	Specifies the maximum percentage of the active power variation for the frequency regulation. The upper limit can be set to the per unit value of **Active Power Baseline**.	-
Lower limit of active power variation for frequency regulation in grid forming mode (%)	Specifies the minimum percentage of the active power variation for the frequency regulation. The lower limit can be set to the per unit value of **Active Power Baseline**.	-
Reactive power voltage regulation baseline in grid forming mode	Specifies the reactive voltage regulation baseline in grid forming mode, which is used for voltage regulation command control.	-
Reactive power voltage regulation coefficient in grid forming mode	Set this parameter to the ratio of the per unit value of the reactive power variation to the per unit value of the root mean square voltage variation for the voltage regulation.	-
Reactive power voltage regulation deadband in grid forming mode	Set **Reactive power voltage regulation deadband in grid forming mode**.	-

 Copyright © Huawei Technologies Co., Ltd.

Parameter	Description	Remarks
Upper limit of reactive power variation for voltage regulation in grid forming mode (%)	Specifies the maximum percentage of the reactive power variation for the frequency regulation. The upper limit can be set to three times the per unit value of **Apparent Power Baseline**.	-
Lower limit of reactive power variation for voltage regulation in grid forming mode (%)	Specifies the minimum percentage of the reactive power variation for the frequency regulation. The lower limit can be set to three times the per unit value of **Apparent Power Baseline**.	-
Inertia time constant in grid forming mode	Specifies the time required for the virtual rotor of the GFM-related virtual synchronous generator to reach the rated speed from the static state under the rated torque.	-
Frequency damping deadband in grid forming mode	Specifies the deadband frequency for the GFM frequency damping function. The frequency damping function takes effect only when the frequency is beyond the specified range.	-
Frequency damping coefficient in grid forming mode	Specifies the damping coefficient for the GFM frequency damping function.	-
Power damping coefficient in grid forming mode	Specifies the damping coefficient for the GFM frequency damping function.	-
GFM Virtual PSS	Specifies whether to enable the GFM virtual PSS.	-
Virtual PSS low frequency oscillation damping enhancement gain	Specifies the enhanced damping gain required by the virtual PSS to implement low-frequency oscillation damping.	This parameter is displayed when **GFM Virtual PSS** is set to **Enable**.
Virtual PSS low frequency oscillation damping phase compensation center frequency	Specifies the center frequency for phase compensation required by the virtual PSS to implement low-frequency oscillation damping.	

 Copyright © Huawei Technologies Co., Ltd.

Parameter	Description	Remarks
Virtual PSS Low Frequency Oscillation Damping Compensation Phase	Specifies the phase for phase compensation required by the virtual PSS to implement low-frequency oscillation damping.	
Virtual PSS Low Frequency Oscillation Damping DC Blocking Time Constant	Specifies the time constant for DC blocking required by the virtual PSS to implement low-frequency oscillation damping.	
Virtual PSS Low Frequency Oscillation Damping Output Type	Specifies the type of power that needs to be damped by the virtual PSS to implement low-frequency oscillation damping.	
Virtual PSS Low Frequency Oscillation Damping Output Power Limiting	Specifies the percentage of the output power limit to the rated power required by the virtual PSS to implement low-frequency oscillation damping.	
Virtual PSS Low Frequency Oscillation Damping Trigger Deadband	Specifies the frequency deadband of the output damping power triggered by the virtual PPS to implement low-frequency oscillation damping.	
Virtual impedance excitation control in grid forming mode	Specifies whether to enable **Virtual impedance excitation control in grid forming mode**.	-
Excitation virtual impedance in grid forming mode	Specifies the per unit impedance of virtual impedance excitation control in grid forming mode.	This parameter is displayed when **Virtual impedance excitation control in grid forming mode** is set to **Enable**.
GFM wideband oscillation damping	Specifies whether to enable **GFM wideband oscillation damping**.	-
Broadband oscillation damping start frequency	Specifies the start frequency for the wideband oscillation damping function.	This parameter is displayed when **GFM wideband oscillation damping** is set to **Enable**.

 Copyright © Huawei Technologies Co., Ltd.

Parameter	Description	Remarks
Wideband oscillation damping compensation phase center frequency	Specifies the center frequency for phase compensation required for the wideband oscillation damping function.	
Wideband oscillation damping compensation phase	Specifies the phase to be compensated at the center frequency of phase compensation required for the wideband oscillation damping function.	
Wideband oscillation damping enhanced resistor	Specifies the enhanced resistance for the wideband oscillation damping function.	
Broadband oscillation damping cut-off frequency	Specifies the cut-off frequency for the wideband oscillation damping function.	
Inertia response in grid following mode	Specifies whether to enable **Inertia response in grid following mode**.	-
Inertia time constant in grid following mode	Specifies the time required for the simulated synchronous generator to reach the rated speed from the static state under the rated torque.	This parameter is displayed when **Inertia time constant in grid following mode** is set to **Enable**.
Inertia frequency deadband in grid following mode	When the absolute value of the current frequency variation is greater than the configured frequency variation deadband, the device outputs the inertia power in grid following mode.	
Inertia frequency change rate threshold in grid following mode	When the absolute value of the current frequency change rate is greater than the configured frequency change rate threshold, the device outputs the inertia power in grid following mode.	
Hysteresis threshold for inertia frequency change rate in grid following mode	When the absolute value of the current frequency change rate is less than the frequency change rate threshold minus the frequency change rate hysteresis threshold, the device stops outputting the inertia power in grid following mode.	

 Copyright © Huawei Technologies Co., Ltd.

Parameter	Description	Remarks
Upper limit of inertia active power change in grid following mode	Specifies the upper limit (percentage) of inertia active power variation in grid following mode. The upper limit can be set to the per unit value of the rated power.	
Lower limit of inertia active power change in grid following mode	Specifies the lower limit (percentage) of inertia active power change in grid following model. The lower limit can be set to the per unit value of the rated power.	
Automatic voltage control for extremely weak grids	The default value is **Disable**. If this parameter is set to **Enable**, the device can run stably in an extremely weak power grid. After this parameter is set to **Enable**, the power response speed slows down, which affects the closed-loop control effect of the array. Therefore, exercise caution when setting this parameter.	-
Primary working mode automatic switch voltage drop value	Specifies the voltage drop threshold for triggering automatic working mode switching.	-
Primary working mode automatic switch voltage delay time	Specifies the duration threshold of primary voltage drop for triggering working mode switching.	-
Secondary working mode automatic switch voltage drop value	Specifies the voltage drop threshold for triggering automatic working mode switching.	-
PQ/VSG auto switching interval	Specifies the time during which the PCS is not allowed to automatically switch to the VSG mode after it is manually switched to the PQ mode.	-
Gain for VSG sub-synchronous oscillation damping	Specifies the gain coefficient for sub-synchronous oscillation damping.	-
Frequency band for VSG sub-synchronous oscillation damping	Specifies the frequency band for oscillation damping.	-

 Copyright © Huawei Technologies Co., Ltd.

Power Adjustment

Parameter	Description
Power control priority	● If this parameter is set to **Active power first**, the device preferentially ensures active power output. ● If this parameter is set to **Reactive power first**, the device preferentially ensures reactive power output.
Schedule instruction valid duration (s)	Specifies the validity period of the scheduling instruction.
Plant active power gradient	Specifies the rate of active power rise due to irradiance changes.
Average active power filtering time	This parameter is used together with **Plant active power gradient**. When the active power increases due to irradiance changes, the device increases the active power output in a stepwise pattern. This parameter is used to adjust the time step of the active power change.
Active power change gradient (%/s)	Specifies the change rate of the device active power.
Active power (kW)	Specifies the fixed active power of the device.
Active power (%)	Specifies the active power of the device in percentage.
Reactive power change gradient (%/s)	Specifies the change rate of the device reactive power.
Power factor	Specifies the power factor of the device.
Reactive power compensation (Q/S) [high precision]	Specifies the reactive power of the device.
Q-U characteristic curve	The device adjusts Q/S (the ratio of the output reactive power to apparent power) in real time based on **U/Un(%)** (the ratio of the actual power grid voltage to the rated power grid voltage).
Q-U characteristic curve mode	Specifies the reactive power compensation mode of the device output.
Delay for Q-U characteristic curve to take effect	Specifies the delay time for Q-U adjustment.
Power percentage for triggering Q-U scheduling	Specifies the reference apparent power in percentage. When the actual apparent power of the device is greater than the value of this parameter, the Q-U characteristic curve scheduling function is enabled.

 Copyright © Huawei Technologies Co., Ltd.

Parameter	Description
Power percentage for exiting Q-U scheduling	Specifies the P/Pn when the device exits the Q-U scheduling.
Minimum PF of Q-U characteristic curve	Specifies the minimum power factor for Q-U adjustment.
Q-P characteristic curve	The device adjusts Q/Pmax (the ratio of the reactive power to the maximum active power) in real time based on **P/Pmax** (the ratio of the active power to the maximum active power).
PF-U characteristic curve	The device adjusts the power factor in real time based on **U/Un(%)** (the ratio of the actual power grid voltage to the rated power grid voltage).
PF-U voltage detection filter time	Specifies the time for filtering the grid voltage in the PF-U curve.
cosϕ-P/Pn characteristic curve	The device adjusts the output power factor cosϕ in real time based on P/Pn(%).
cosϕ-P/Pn trigger voltage	Specifies the voltage threshold for triggering reactive power compensation based on the cosϕ-P curve.
cosϕ-P/Pn exit voltage	Specifies the voltage threshold for exiting reactive power compensation based on the cosϕ-P curve.
Reactive power adjustment time	Specifies the adjustment time for the reactive power to reach the target value during reactive power adjustment.

Power Baseline

Parameter	Description	Remarks
Rated power reference	Set the rated capacity of the device.	-
Apparent power baseline	Specifies the apparent power baseline for power scheduling. The value cannot be greater than the maximum apparent power.	**Active power baseline** shall be smaller than **Apparent power baseline**.
Active power baseline	Specifies the active power baseline for power scheduling. The value cannot be greater than the maximum active power.	

 Copyright © Huawei Technologies Co., Ltd.

Parameter	Description	Remarks
Maximum overload apparent power	Specifies the maximum overload apparent power for grid forming.	• In versions earlier than SmartLogger V300R024C10, this parameter can be set only for the LUNA2000-1.0MWH and LUNA2000-2.0MWH series in grid forming scenarios. If this parameter is set for other models or scenarios, the system displays a message indicating that the configuration fails. • In SmartLogger V300R024C10 and later versions, set this parameter based on site requirements.
Maximum overload active power	Specifies the maximum overload active power for grid forming.	

Adjustment

Parameter	Description
Adjust total energy yield	A calibrating coefficient for the total energy yield to ensure that the reported energy yield is consistent with the actual energy yield at the grid connection point
Adjusted total power supply from grid	A calibrating coefficient for the total power supply from the grid to ensure that the reported amount of power supplied from the grid is consistent with the actual power supply at the grid connection point

6.3.12 Setting ESS Parameters (Model 1)

ESS parameter settings in this section apply to the following models:

- LUNA2000-97KWH-1H1
- LUNA2000-129KWH-2H1
- LUNA2000-161KWH-2H1
- LUNA2000-200KWH-2H0
- LUNA2000-200KWH-2H1
- LUNA2000-1.0MWH-1H1
- LUNA2000-1.0MWH-ES1H1
- LUNA2000-2.0MWH-1H0

 Copyright © Huawei Technologies Co., Ltd.

- LUNA2000-2.0MWH-1H1
- LUNA2000-2.0MWH-2H0
- LUNA2000-2.0MWH-2H1
- LUNA2000-2.0MWH-4H1
- LUNA2000-2.0MWH-HE2H1
- LUNA2000-2.0MWH-HE1H1

6.3.12.1 Setting CMU Parameters

This section does not apply to V300R001C00.

Procedure

Choose **Monitoring** > **ESS** > **CMU** > **Running Param.**, set running parameters, and click **Submit**.

Temperature and Humidity Control

Parameter	Description
Control mode	• **Auto** (default): The operating status and mode of the air conditioner are automatically controlled by the temperature and humidity control module. • **Manual**: You can manually set the operating status and mode of the air conditioner for commissioning. After the commissioning is complete, switch back to the automatic mode. Otherwise, the temperature and humidity may be out of control.
Air conditioner parameter setting[1]	• **Default**: The air conditioner works based on the default cooling start/stop temperatures and heating start/stop temperatures in the system software. • **Custom**: You can adjust the cooling start/stop temperatures and heating start/stop temperatures of the air conditioner as required.
Forced dehumidification control	At the first startup after deployment or long-term storage, you are advised to start forced dehumidification to reduce the risk of equipment damage caused by condensation.
Note [1]: This parameter can be set only in V300R023C00 and later versions.	

Exhaust Control

Parameter	Description
Exhaust fan control module self-test time	Time when the exhaust function is self-tested every day

 Copyright © Huawei Technologies Co., Ltd.

Parameter	Description
Exhaust fan control module self-test	After the self-test is started, the exhaust fan will be running for a period of time to check its exhaust function. If the exhaust fan does not meet the requirements, the system cannot start.
Exhaust fan control	After started, the exhaust fan will automatically stop in at least 1 hour. If a combustible gas alarm is generated, the exhaust fan cannot be stopped. The exhaust fan cannot be manually started after the fire response is triggered until the fire alarm is cleared or 24 hours later.

Fire Suppression

NOTE

Only the LUNA2000-2.0MWH series Smart String Grid Forming ESS supports DC output power distribution.

Parameter	Description
DC output distribution	• **Starting up**: Enable the DC output power distribution to supply 48 V DC power to the battery pack fan, BMU, and ESC monitoring system. • **Stop**: Disable the DC output power distribution to stop supplying 48 V DC power to the battery pack fan, BMU, and ESC monitoring system.

NOTE

Only the LUNA2000-200KWH series Smart String Grid Forming ESS supports the temperature alarm threshold settings.

Parameter	Description
Temperature alarm threshold	Specifies the temperature threshold for triggering a fire alarm and processing fire response logic.

Burglar Alarm

The burglar alarm function applies only to the C&I scenario. This function is supported only in SmartLogger V300R023C00SPC172 and later versions and shall be used together with LUNA2000B V100R023C00SPC120 and later versions.

 Copyright © Huawei Technologies Co., Ltd.

Parameter	Description
Burglar Alarm	The default value is **Disable**. **Disable**: No burglar alarm will be triggered when the ESS door is open. **Enable**: A burglar alarm will be triggered when the ESS door is open.

6.3.12.2 Setting ESU Parameters

This section does not apply to V300R001C00.

Procedure

Choose **Monitoring** > **ESS** > **ESU** > **Running Param.**, set running parameters, and click **Submit**.

Running Parameters

Parameter	Description
Enable delayed update	• If this parameter is set to **Enable**, after the upgrade package is uploaded, the ESU will perform the upgrade automatically when the SOC is greater than or equal to 30%, the rack voltage is greater than or equal to 400 V, and the ESC and ESM communicate properly. • If this parameter is set to **Disable**, the upgrade can be performed immediately. The upgrade may fail if the upgrade conditions are not met.
Delete invalid battery packs	Delete battery packs that are not connected. This function is used when replacing battery packs.
Battery pack shutdown delay	After this parameter is set, the system can still monitor the battery for a period of time after power-off.
Shutdown due to communication interruption between the rack controller and PCS	• The default value is **Disable**. • If this parameter is set to **Enable**, the ESS shuts down when the communication between the PCS and the rack controller is interrupted.

6.3.12.3 Setting ESC Parameters

This section does not apply to V300R001C00.

Procedure

Choose **Monitoring** > **ESS** > **ESU** > **ESC** > **Running Param.**, set running parameters and click **Submit**.

Running Parameters

Parameter	Setting Description
Insulation resistance protection threshold	To ensure device safety, the device detects the insulation resistance of the DC side to the ground when it starts a self-check. If the detected value is less than the preset value, the device does not start. Value range: [0.05, 1.5].

6.3.12.4 Setting ESR Parameters

This section does not apply to V300R001C00.

Procedure

Choose **Monitoring** > **ESS** > **ESU** > **ESR** > **Running Param.**, set running parameters, and click **Submit**.

Parameters Settings

Parameter	Description	Remarks
Battery working mode	Set the battery rack to **Running** or **Hibernation**.	-
Charging cutoff SOC	Set the end-of-charge SOC of battery packs in a battery rack.	For SmartLogger V300R023C10SPC500 and later versions, **Charging cutoff SOC** and **Discharge cutoff SOC** do not take effect.
Discharge cutoff SOC	Set the end-of-discharge SOC of battery packs in a battery rack.	
Quantity of battery packs	Set the quantity of battery packs in a battery rack. If the quantity is inconsistent with the actual quantity, the system cannot start.	-
Insulation resistance diagnosis	Start or stop the detection for power insulation resistance of the battery rack.	-
Battery pack position detection	Start or stop the identification for battery pack positions in a battery rack.	-

Energy Yield Calibration

Parameter	Description
Total charged energy calibration	Calibrate the total charged energy.

 Copyright © Huawei Technologies Co., Ltd.

Parameter	Description
Total discharged energy calibration	Calibrate the total discharged energy.

6.3.12.5 Setting HVAC Parameters

This section does not apply to V300R001C00.

Procedure

Choose **Monitoring** > **ESS** > **HVAC** > **Running Param.**, set running parameters, and click **Submit**.

Parameters Settings

Parameter	Description	Remarks
Working mode	The default value is **Auto**. The air conditioner working mode can be **Auto**, **Dry**, **Heat**, or **Cool**.	• The working mode of the air conditioner is adjusted intelligently. Non-professional personnel are not allowed to set the working mode. • The air conditioner dehumidification mode is used for system protection. Do not set the air conditioner to dehumidification mode manually. • The heating and cooling modes of the air conditioner are used only for equipment commissioning. Do not set them manually.

 Copyright © Huawei Technologies Co., Ltd.

Parameter	Description	Remarks
Cooling start temperature	Set the target temperature for cooling when the air conditioner works in automatic mode.	• This parameter affects the system charge/discharge power and cell lifespan. Non-professional personnel are not allowed to set this parameter. • 280 Ah battery pack: When the rate is [0C, 0.25C], refer to the 0.25C temperature control. When the rate is (0.25C, 0.5C], refer to the 0.5C temperature control. When the rate is (0.5C, 1C], refer to the 1C temperature control. • 320 Ah battery pack: When the rate is [0C, 0.5C], refer to the 0.5C temperature control. When the rate is (0.5C, 1C], refer to the 1C temperature control. • Choose **Monitoring > ESS > ESU > ESR > ESM > Cell data** to query the quantity of battery cells. If the quantity of battery cells is 16, the battery pack is 320 Ah. If the quantity of battery cells is 18, the battery pack is 280 Ah. • If a high-rate system is used in the low-rate scenario, it is prone to low efficiency, high power consumption, and current limiting. • The Company is not liable for any system exception or underperformance caused by failure to set the temperatures as required. • For special scenarios, contact the Company's engineers.
Cooling stop temperature	Set the target temperature when the air conditioner stops cooling in automatic mode.	
Heating start temperature	Set the target temperature for heating when the air conditioner works in automatic mode.	
Heating stop temperature	Set the target temperature when the air conditioner stops heating in automatic mode.	
High temperature alarm threshold	Set the indoor high temperature alarm threshold for the air conditioner.	-
Low temperature alarm threshold	Set the indoor low temperature alarm threshold for the air conditioner.	-
AC overvoltage alarm threshold	Set the upper threshold for the AC input voltage of the air conditioner.	This parameter applies only to air conditioners in the battery cabin of the LUNA2000-2.0MWH Series Smart String Grid Forming ESS.

 Copyright © Huawei Technologies Co., Ltd.

Parameter	Description	Remarks
AC undervoltage alarm threshold	Set the lower threshold for the AC input voltage of the air conditioner.	This parameter applies only to air conditioners in the battery cabin of the LUNA2000-2.0MWH Series Smart String Grid Forming ESS.
DC overvoltage alarm threshold	Set the upper threshold for the DC input voltage of the air conditioner.	This parameter applies only to in-cabinet air conditioners of the LUNA2000-200KWH Series Smart String Grid Forming ESS and air conditioners in the control unit cabin of the LUNA2000-2.0MWH Series Smart String Grid Forming ESS.
DC undervoltage alarm threshold	Set the lower threshold for the DC input voltage of the air conditioner.	This parameter applies only to in-cabinet air conditioners of the LUNA2000-200KWH Series Smart String Grid Forming ESS and air conditioners in the control unit cabin of the LUNA2000-2.0MWH Series Smart String Grid Forming ESS.

6.3.13 Setting ESS Parameters (Model 2)

This section describes how to set ESS parameters only for the LUNA2000-(107-241) series.

NOTICE

In off-grid working conditions, start the ESS if you need to modify the grid parameters, protection parameters, feature parameters, power adjustment parameters, or power baseline parameters of the ESS. If the ESS has been shut down, choose **Maintenance** > **Connect Device** and click the button. After the black start is successful, set related parameters.

Procedure

Choose **Monitoring** > **ESS** > **Running Param**, set running parameters, and click **Submit**.

Copyright © Huawei Technologies Co., Ltd.

Basic Parameters

Parameter	Description	Remarks
ESS working mode switch	Set this parameter to **Running** or **Shutdown**.	This parameter will not be displayed after ESS startup authorization is completed.
Startup authorization code	Set the startup authorization code. Otherwise, the ESS cannot be started. Contact the ESS supplier or installer to obtain the startup authorization code.	-
Device	Set the name of the ESS.	-
Certificate verification interval	Set the certificate verification interval.	-
Certificate expiration notification period	Set the certificate expiration notification period.	-
Communication using expired certificate	Enable or disable communication using an expired certificate.	-
Remote black start	Perform black start.	-
Display module brightness	Set this parameter to **Off**, **Low**, **Moderate**, or **High**. The default value is **Moderate**.	-
Delayed update	• **Enable**: The update can be delayed. • **Disable**: The update can be performed immediately. The update may fail if the update conditions are not met.	-
Burglar Alarm	The default value is **Disable**. **Disable**: No burglar alarm will be triggered when the ESS door is open. **Enable**: A burglar alarm will be triggered when the ESS door is open.	-
Alarm beacon control	The default value is **Stopped**. **Stopped**: Disable the alarm beacon output of the ESS. **Start-up**: Enable the alarm beacon output of the ESS.	-

Copyright © Huawei Technologies Co., Ltd.

Parameter	Description	Remarks
Forced dehumidification control	At the first startup after deployment or long-term storage, you are advised to start forced dehumidification to reduce the risk of equipment damage caused by condensation.	-
Exhaust fan control	After started, the exhaust fan will automatically stop in at least 1 hour. If a combustible gas alarm is generated, the exhaust fan cannot be stopped. The exhaust fan cannot be manually started after the fire response is triggered until the fire alarm is cleared or 24 hours later.	This parameter is displayed when the number of exhaust fans is greater than 0.
Exhaust fan control module self-test	After the self-test is started, the exhaust fan will be running for a period of time to check its exhaust function. If the exhaust fan does not meet the requirements, the system cannot start.	
Exhaust fan control module self-test time	Time when the exhaust function is self-tested every day	
Secondary power supply for fire suppression module	The thermal runaway suppression device uses lead-acid batteries as the backup power supply. If the primary power supply is disconnected and switched to the backup power supply, the energy of the lead-acid batteries may be exhausted. To reduce the probability of this risk, an external port for operating the backup power switch is added.	This parameter is displayed when the quantity of backup power supplies for the thermal runaway suppression device is greater than 0.

Grid Parameters

Parameter	Description
Grid code	Set this parameter based on the grid code of the country or region where the device is used.
Isolation settings	Specifies the device grounding status on the DC side and the connection to the power grid.
Output mode	Specifies the supported power grid types.

 Copyright © Huawei Technologies Co., Ltd.

Parameter	Description
Automatic voltage control for extremely weak grids	The default value is **Disable**. If this parameter is set to **Enable**, the device can run stably in an extremely weak power grid. After this parameter is set to **Enable**, the power response speed slows down, which affects the closed-loop control effect of the array. Therefore, exercise caution when setting this parameter.
Grid reconnection voltage upper limit (V)	According to the standards of certain countries and regions, grid reconnection is not allowed when the grid voltage is higher than the maximum voltage for grid reconnection.
Grid reconnection voltage lower limit (V)	According to the standards of certain countries and regions, grid reconnection is not allowed when the grid voltage is lower than the minimum grid voltage for grid reconnection.
Grid reconnection frequency upper limit (Hz)	According to the standards of certain countries and regions, grid reconnection is not allowed when the grid frequency is higher than the maximum grid frequency for grid reconnection.
Grid reconnection frequency lower limit (Hz)	According to the standards of certain countries and regions, grid reconnection is not allowed when the grid frequency is lower than the minimum grid frequency for grid reconnection.
On-grid recovery time (s)	Specifies the time after which the device begins restarting after the power grid recovers.
Quick startup for short-time grid disconnection	Specifies whether to allow the device to quickly start after the power grid recovers from a short-time failure.
Duration for determining short-time grid disconnection (ms)	The standards of certain countries and regions require that the device should not disconnect from the power grid if the power grid experiences a short-time failure. After the fault is rectified, the device output power needs to be quickly restored.
Auto start upon grid recovery	Specifies whether to allow the device to automatically start after the power grid recovers.

Protection Parameters

Parameter	Description	Remarks
PCS insulation resistance protection threshold	To ensure device safety, the device detects the insulation resistance of the DC side to the ground when it starts a self-check. If the detected value is less than the preset value, the device does not connect to the grid nor start. The recommended value range is [0.033, 1.5].	-

 Copyright © Huawei Technologies Co., Ltd.

Parameter	Description	Remarks
Unbalance voltage protection (%)	Specifies the device protection threshold when the power grid voltage is unbalanced.	-
Phase angle offset protection	The standards of certain countries and regions require that the device needs to be protected when the phase angle offset of the power grid three phases exceeds a certain value.	-
Active islanding protection	Specifies whether to enable the active islanding protection function.	-
10 minute OV protection (V)	Specifies the 10-minute overvoltage protection threshold. Value range: [800, 1000] V.	-
10 minute OV protection time (ms)	Specifies the 10-minute overvoltage protection duration.	-
Level-N OV protection (V)	Specifies the level-N grid overvoltage protection threshold.	N can be 1, 2, 3, 4, 5, or 6. Set this parameter as required.
Level-N OV protection time (ms)	Specifies the level-N grid overvoltage protection duration.	
Level-N UV protection (V)	Specifies the level-N grid undervoltage protection threshold.	
Level-N UV protection time (ms)	Specifies the level-N grid undervoltage protection duration.	
Level-N OF protection (Hz)	Specifies the level-N grid overfrequency protection threshold.	
Level-N OF protection time (ms)	Specifies the level-N grid overfrequency protection duration.	
Level-N UF protection (Hz)	Specifies the level-N grid underfrequency protection threshold.	
Level-N UF protection time (ms)	Specifies the level-N grid underfrequency protection duration.	

 Copyright © Huawei Technologies Co., Ltd.

Feature Parameters

Parameter	Description	Remarks
Frequency-based control	The standards of certain countries and regions require that if the power grid frequency fluctuates around the rated value, the device needs to fine-tune the active power output based on **Frequency-based adjustment ratio** to help stabilize the power grid frequency. In this case, set this parameter to **Enable**.	-
Response deadband of frequency-based control	Specifies the threshold for triggering frequency-based control. For example, if this parameter is set to 0.1 Hz, the frequency-based control is not triggered when the frequency is within reference frequency±0.1 Hz.	This parameter is displayed when **Frequency-based control** is set to **Enable**.
Power change gradient of frequency-based control	Specifies the active power change gradient of frequency-based control.	
Power change limit of frequency-based control	Specifies the upper limit for active power adjustment in frequency-based control.	
Frequency-based adjustment ratio	Specifies the adjustment ratio of the active power output.	
Protection upon communication failure	**Enable**: In the feed-in limitation scenario, if the device is disconnected from the SmartLogger or Smart Dongle for a period longer than the **Communication disconnection detection time**, the inverter will derate the active power. **Disable**: Protection upon communication failure is disabled. After being disconnected from the SmartLogger or Smart Dongle, the device continues to operate in the same way as before the disconnection. If **Automatic OFF due to communication interrupted** is set to **Enable** (the default value is **Disable**), the device shuts down once it is disconnected from the SmartLogger or Smart Dongle.	-

 Copyright © Huawei Technologies Co., Ltd.

Parameter	Description	Remarks
Active power mode when communication fails	Specifies the protection mode of the active power after the communication is interrupted. The value can be **Percentage** or **Fixed value**.	This parameter is displayed when **Protection upon communication failure** is set to **Enable**.
Reactive power mode when communication fails	Specifies the protection mode of the reactive power after the communication is interrupted. The value can be **Q/S** or **Power factor**.	
Communication disconnection detection time (s)	Specifies the detection time for protection upon a communication failure between the device and the SmartLogger or Smart Dongle.	
Active power threshold (%) when communication fails [high precision]	Specifies the threshold of the device's rated active power in percentage.	This parameter is displayed when **Protection upon communication failure** is set to **Enable** and **Active power mode when communication fails** is set to **Percentage**.
Active power threshold (kW) when communication fails [high precision]	Specifies the active power threshold as a fixed value.	This parameter is displayed when **Protection upon communication failure** is set to **Enable** and **Active power mode when communication fails** is set to **Fixed value**.
Reactive power threshold (Q/S) when communication fails [high precision]	Specifies the Q/S threshold of the reactive power.	This parameter is displayed when **Protection upon communication failure** is set to **Enable** and **Reactive power mode when communication fails** is set to **Q/S**.
Reactive power threshold (PF) when communication fails	Specifies the power factor threshold of the reactive power.	This parameter is displayed when **Protection upon communication failure** is set to **Enable** and **Reactive power mode when communication fails** is set to **Power factor**.
Soft start time (s)	Specifies the duration for the power to gradually increase until the device starts.	-
Shutdown gradient (%/s)	Specifies the power change rate until the device shuts down.	-

 Copyright © Huawei Technologies Co., Ltd.

Parameter	Description	Remarks
HVRT	HVRT is short for high voltage ride-through. When the grid voltage is abnormally high for a short time, the device cannot disconnect from the power grid immediately and has to work for some time.	-
HVRT threshold (V)	Specifies the threshold for triggering HVRT. The threshold settings should meet the local grid standard.	This parameter is displayed when **HVRT** is set to **Enable**.
Positive-sequence reactive power compensation factor in HVRT	During HVRT, the device needs to generate positive-sequence reactive power to support the power grid. This parameter is used to set the positive-sequence reactive power generated by the device. For example, if you set this parameter to **2**, the increment of positive-sequence reactive current generated by the device is 20% of the rated current when the AC voltage increases by 10% during HVRT.	
Negative-sequence reactive power compensation factor in HVRT	During HVRT, the device needs to generate negative-sequence reactive power to support the power grid. This parameter is used to set the negative-sequence reactive power generated by the device. For example, if you set this parameter to **2**, the increment of negative-sequence reactive current generated by the device is 20% of the rated current when the AC voltage increases by 10% during HVRT.	
Zero current due to power grid fault	Specifies whether to enable the function of working in zero-current mode upon a power grid fault.	
Deactivate grid voltage protection during HVRT/LVRT	Specifies whether to shield the voltage protection function during LVRT or HVRT.	• This parameter is displayed when **LVRT** or **HVRT** is set to **Enable**. • LVRT recovery threshold = LVRT threshold + VRT exit hysteresis threshold • HVRT recovery threshold = HVRT threshold – VRT exit hysteresis threshold
VRT exit hysteresis threshold	Specifies the LVRT/HVRT recovery threshold.	
VRT active current limiting (%)	Specifies the percentage of the maximum active current to the rated current during fault ride-through (FRT).	

 Copyright © Huawei Technologies Co., Ltd.

Parameter	Description	Remarks
VRT active power recovery gradient	Specifies the recovery rate when the active current is restored to the value at the moment before fault ride-through.	
LVRT	LVRT is short for low voltage ride-through. When the grid voltage is abnormally low for a short time, the device cannot disconnect from the power grid immediately and has to work for some time.	-
LVRT threshold (V)	Specifies the threshold for triggering LVRT. The threshold settings should meet the local grid standard.	This parameter is displayed when **LVRT** is set to **Enable**.
LVRT reactive current limiting (%)	During LVRT, the device needs to limit the reactive current. For example, if you set this parameter to **50**, the reactive current upper limit of the device is 50% of the rated current during LVRT.	
Threshold of LVRT zero-current mode	If **Zero-current mode on power grid fault** is enabled and the power grid voltage is less than **Threshold of LVRT zero-current mode** during LVRT, the zero-current mode is used. Otherwise, the mode set in LVRT mode is used.	
LVRT mode	Specifies the LVRT mode. The options are **Zero-current mode**, **Constant current mode**, **Reactive power priority mode**, and **Active power priority mode**.	
Positive-sequence reactive power compensation factor in LVRT	During LVRT, the device needs to generate positive-sequence reactive power to support the power grid. This parameter is used to set the positive-sequence reactive power generated by the device. For example, if you set this parameter to **2**, the increment of positive-sequence reactive current generated by the device is 20% of the rated current when the AC voltage decreases by 10% during LVRT.	

 Copyright © Huawei Technologies Co., Ltd.

Parameter	Description	Remarks
Negative-sequence reactive power compensation factor in LVRT	During LVRT, the device needs to generate negative-sequence reactive power to support the power grid. This parameter is used to set the negative-sequence reactive power generated by the device. For example, if you set this parameter to **2**, the increment of negative-sequence reactive current generated by the device is 20% of the rated current when the AC voltage decreases by 10% during LVRT.	
LVRT active current maintenance coefficient	Specifies the active current proportional coefficient before and during LVRT.	-
Overfrequency-caused power derating	If this parameter is set to **Enable**, when the power grid frequency exceeds the frequency threshold for triggering overfrequency-caused power derating, the active power of the device is derated based on a certain gradient.	-
Frequency threshold for stopping overfrequency-caused power derating (Hz)	Specifies the frequency threshold for stopping overfrequency-caused power derating.	• This parameter is displayed when **Overfrequency-caused power derating** is set to **Enable**. • When setting this parameter, ensure that the following condition is met: **Frequency threshold for exiting overfrequency-caused power derating** ≤ **Frequency threshold for triggering overfrequency-caused power derating** < **Frequency threshold for stopping overfrequency-caused power derating**.
PCS power threshold for stopping overfrequency-caused power derating	Specifies the power threshold for stopping overfrequency-caused power derating.	
Frequency threshold for triggering overfrequency-caused power derating (Hz)	The standards of certain countries and regions require that the output active power of the device be derated when the power grid frequency exceeds a certain value.	
Frequency threshold for exiting overfrequency-caused power derating (Hz)	Specifies the frequency threshold for exiting overfrequency derating.	
Power drop gradient of overfrequency derating (%/s)	Specifies the rate of overfrequency-caused power derating.	
Gradient of power recovery from overfrequency-caused derating (%/min)	Specifies the power recovery rate for overfrequency-caused power derating.	

 Copyright © Huawei Technologies Co., Ltd.

Parameter	Description	Remarks
Underfrequency-caused power raising	The standards of certain countries and regions require that the device need to increase the active power output to increase the power grid frequency if the power grid frequency is lower than **Frequency threshold for triggering underfrequency-caused power raising**. In this case, set this parameter to **Enable**.	-
Gradient of underfrequency-caused power raising (%/min)	Specifies the power recovery rate for underfrequency-caused power raising.	This parameter is displayed when **Underfrequency-caused power raising** is set to **Enable**.
Frequency threshold for stopping underfrequency-caused power raising (Hz)	Specifies the frequency threshold for stopping underfrequency-caused power raising.	
PCS power threshold for stopping underfrequency-caused power raising	Specifies the power threshold for stopping underfrequency-caused power raising.	
Frequency threshold for triggering underfrequency-caused power raising (Hz)	Specifies the frequency threshold for triggering underfrequency-caused power raising.	
Frequency threshold for exiting underfrequency-caused power raising (Hz)	Specifies the frequency threshold for exiting underfrequency-caused power raising.	
Delay of underfrequency-caused power raising	Specifies the delay of underfrequency-caused power raising.	

 Copyright © Huawei Technologies Co., Ltd.

Parameter	Description	Remarks
Microgrid compatibility	The default value is **Disable**. The recommended settings are as follows: ● If **Working mode** is set to **VSG** for the PCS or **Scenario** is set to **On-grid**, set this parameter to **Disable**. ● If **Working mode** is set to **PQ** for the PCS and the PCS works in a microgrid that uses a diesel generator or other voltage sources, set this parameter to **Enable**. If this parameter is set to **Enable**, the PCS adaptively changes the output power based on the original grid code and the grid voltage and frequency to support a higher ratio of current sources to voltage sources (that is, PV-to-ESS ratio).	If this parameter is set incorrectly, the Smart PCS may run abnormally.
Working mode	The default value is **PQ**. ● If **Scenario** is set to **On-grid**, set this parameter to **PQ**. ● If **Scenario** is set to **Off-grid**, set this parameter to **VSG**. ● If **Scenario** is set to **On/Off-grid**, set this parameter to **PQ** or **VSG**.	● If you set **VSG**, ensure that the AC output side of the ESS uses the TN system and **Output mode** is set to **Three-phase four-wire**. ● After this parameter is set, the device shuts down.
Per unit armature resistance	The default value is **2**. Specifies the resistance per unit value for armature windings of the virtual synchronous generator.	-
Per unit armature inductive reactance	The default value is **1**. Specifies the inductive reactance per unit value for armature windings of the virtual synchronous generator.	-
Off-grid VSG Inertia Time Constant	The default value is **0.9**. Specifies the time required for the virtual rotor of the virtual synchronous generator to reach the rated speed from the static state under the rated torque.	-
P-F adjustment coefficient	The default value is **1**. Specifies the frequency deviation corresponding to the rated active power of the virtual synchronous generator.	-
Q-V adjustment coefficient	The default value is **3**. Specifies the voltage deviation corresponding to the rated reactive power of the virtual synchronous generator.	-

 Copyright © Huawei Technologies Co., Ltd.

Parameter	Description	Remarks
P-V adjustment coefficient	The default value is **0**. Specifies the voltage deviation corresponding to the rated active power of the virtual synchronous generator.	-
Q-F adjustment coefficient	The default value is **0**. Specifies the frequency deviation corresponding to the rated reactive power of the virtual synchronous generator.	-
VSG output voltage correction coefficient	The default value is **100**. Corrects the deviation caused by the transformer ratio error.	-
VSG output frequency correction coefficient	The default value is **100**. Corrects the PCS output frequency deviation.	-
VSG frequency damping coefficient	The default value is **7.2**. Specifies the power factor that prevents the frequency change of the virtual synchronous generator.	-
VSG excitation time constant	The default value is **0**. Specifies the time required for the excitation of the virtual synchronous generator to reach the rated voltage.	-
VSG excitation damping coefficient	The default value is **0**. Specifies the power factor that prevents the voltage change of the virtual synchronous generator.	-
Voltage adjustment value for VSG synchronous control (%)	The default value is **0**. Specifies the adjustment value of the PCS control output voltage in VSG mode.	-
Frequency adjustment value for VSG synchronous control (%)	The default value is **0**. Specifies the adjustment value of the PCS output frequency in VSG mode.	-
Auto switching between working modes	This parameter is applicable only in on-grid or on/off-grid mode. ● **Disable**: On/Off-grid switching cannot be performed automatically. ● **Enable**: On/Off-grid switching can be performed automatically and the PCS does not need to be shut down before the switching.	-

 Copyright © Huawei Technologies Co., Ltd.

Parameter	Description	Remarks
Working mode switching delay	The default value is **60**. Time for other instructions to take effect during PCS working mode switching. The value range is [10, 300] (unit: s).	-

Power Regulation

Parameter	Description
Active power (%) [high precision]	Adjusts the active power output of the device by percentage.
Reactive power compensation (Q/S) [high precision]	Specifies the reactive power of the device.
Active power (kW)	Adjusts the active power output of the device by fixed value.
Q-U characteristic curve mode	Specifies the reactive power compensation mode of the device output.
Power percentage for triggering Q-U scheduling	Specifies the reference apparent power in percentage. When the actual apparent power of the device is greater than the value of this parameter, the Q-U characteristic curve scheduling function is enabled.
Minimum PF of Q-U characteristic curve	Specifies the minimum power factor for Q-U adjustment.
Percentage of apparent power	Specifies the percentage of apparent power.
Power factor	Specifies the power factor of the device.
Reactive power change gradient	Specifies the change rate of the device reactive power.
Active power change gradient	Specifies the change rate of the device active power.
PF-U voltage detection filter time	Specifies the time for filtering the grid voltage in the PF-U curve.
Power control priority	Set this parameter to **Reactive power first** or **Active power first**.

Reference Power

Parameter	Description
Apparent power baseline	Specifies the apparent power baseline for power scheduling. The value cannot be greater than the maximum apparent power. When the PCS runs in PQ mode, the apparent power does not exceed the value of this parameter.

 Copyright © Huawei Technologies Co., Ltd.

Parameter	Description
Active power baseline	Specifies the active power baseline for power scheduling. The value cannot be greater than the maximum active power. When the PCS runs in PQ mode, the active power does not exceed the value of this parameter.

Battery Cluster

Parameter	Description
Threshold for active balancing	When the cell pressure difference between packs reaches the threshold, the active balancing management logic is triggered.
DCDC Insulation resistance protection threshold	Set the insulation resistance protection threshold. If the actual value is less than the threshold, the device does not start.
Total charged energy calibration	Calibrate the total charged energy.
Total discharged energy calibration	Calibrate the total discharged energy.
Location of pack 1	Set the location ID of battery pack 1.
Location of pack 2	Set the location ID of battery pack 2.
Location of pack 3	Set the location ID of battery pack 3.
Location of pack 4	Set the location ID of battery pack 4.

Temperature Control System

Parameter	Description	Remarks
Liquid cooling mode	Set this parameter to **Automatic**, **Diagnostic Mode**, or **Maintenance mode**. ● **Automatic**: The liquid thermal management system (LTMS) is automatically controlled. ● **Diagnostic Mode**: The operating status of the LTMS is diagnosed. ● **Maintenance mode**: Choose this mode when coolant needs to be refilled or drained.	-

 Copyright © Huawei Technologies Co., Ltd.

Parameter	Description	Remarks
Silent mode	Set this parameter to **Off** or **On**. If the silent mode is enabled, the noise of the entire cabinet can be reduced.	-
Power limit function for liquid cooling	Set this parameter to **Off** or **On**. If the power limit function for liquid cooling is enabled, the operating power of the LMTS can be limited.	After this function is enabled, the compressor and electric heater of the LTMS cannot be started at the same time.
Maintenance mode	Set this parameter to **Standby**, **Refilling**, or **Draining**. The default value is **Standby**. ● **Standby**: Wait for refilling coolant into or draining coolant from the liquid cooling pipe system. ● **Refilling**: Refill coolant into the liquid cooling pipe system. ● **Draining**: Drain coolant from the liquid cooling pipe system.	● When you select **Refilling**, the following dialog box is displayed: 1. After refilling is started, wait until the refilling process is complete so that the LTMS can run properly. 2. Manual operations have been performed according to the manual. Are you sure you want to continue? ● When you select **Draining**, the following dialog box is displayed: 1. After draining is started, you need to drain coolant and refill coolant so that the LTMS can run properly. 2. Manual operations have been performed according to the manual. Are you sure you want to continue?
Diagnostic Mode	Set this parameter to **Manual** or **Auto**. ● **Manual**: Some components of the LTMS are manually controlled. ● **Auto**: The status of the LTMS is checked automatically.	-

Copyright © Huawei Technologies Co., Ltd.

Parameter	Description	Remarks
Battery temperature control mode for diagnosis	Diagnose the functions of the components involved in the following battery temperature control modes: ● **Self-circulating** ● **Natural cooling** ● **Active cooling** ● **Waste heat recovery** ● **Heat pump heating** ● **Mixed heating** ● **Electric heating** C&I scenario: All modes are applicable. Utility scenario: Only **Self-circulating**, **Natural cooling**, **Active cooling**, and **Electric heating** are applicable.	This parameter is displayed only when **Diagnostic Mode** is set to **Manual**.
Internal environment dehumidifying control mode for diagnosis	Set this parameter to **Off** or **On**. The dehumidifying control mode can be enabled to diagnose the functions of components involved in the dehumidification function.	
Internal environment temperature control mode for diagnosis	Set this parameter to **Off**, **Passive cooling**, or **Active cooling**. ● **Passive cooling**: The passive cooling function is enabled to diagnose the functions of components involved in passive cooling. ● **Active cooling**: The active cooling function is enabled to diagnose the functions of components involved in active cooling.	
Maximum diagnostic mode duration	Set the maximum duration of the diagnostic mode. The value range is [5, 360] min. The system automatically exits the diagnostic mode when the specified duration is reached.	-
Coolant replacement interval	Set the interval for coolant replacement. The default value is 3832 days (3 years). The value range is [1095, 10950] days, that is, 3 to 30 years.	-

 Copyright © Huawei Technologies Co., Ltd.

Parameter	Description	Remarks
Compressor 1 setting status	Set the control speed for compressor 1.	This parameter is displayed when **Liquid cooling mode** is set to **Diagnostic Mode**, **Diagnostic Mode** is set to **Manual**, and one of the following conditions is met: ● **Battery temperature control mode for diagnosis** is set to **Active cooling**, **Heat pump heating**, or **Mixed heating**. ● **Internal environment dehumidifying control mode for diagnosis** is set to **On**. ● **Internal environment temperature control mode for diagnosis** is set to **Active cooling**.
Dehumidification fan setting status	Set the control speed for the dehumidification fan.	This parameter is displayed when **Liquid cooling mode** is set to **Diagnostic Mode**, **Diagnostic Mode** is set to **Manual**, and one of the following conditions is met: ● **Internal environment dehumidifying control mode for diagnosis** is set to **On**. ● **Internal environment temperature control mode for diagnosis** is set to **Passive cooling** or **Active cooling**.
Outdoor fan 1 setting status	Set the control speed for outdoor fan 1.	This parameter is displayed when **Liquid cooling mode** is set to **Diagnostic Mode**, **Diagnostic Mode** is set to **Manual**, and **Battery temperature control mode for diagnosis** is set to one of the following values: ● **Self-circulating** ● **Natural cooling** ● **Active cooling** ● **Heat pump heating** ● **Mixed heating**
Outdoor fan 2 setting status	Set the control speed for outdoor fan 2.	

Copyright © Huawei Technologies Co., Ltd.

Parameter	Description	Remarks
Setting status of circulating pump 1	Set the control speed for circulating pump 1.	This parameter is displayed when **Liquid cooling mode** is set to **Diagnostic Mode**, **Diagnostic Mode** is set to **Manual**, and either of the following conditions is met: ● C&I scenario: **Battery temperature control mode for diagnosis** is set to **Self-circulating**, **Natural cooling**, **Active cooling**, **Heat pump heating**, or **Mixed heating**. ● Utility-scale scenario: **Battery temperature control mode for diagnosis** is set to **Self-circulating**, **Natural cooling**, **Active cooling**, or **Mixed heating**.
Setting status of circulating pump 2	Set the control speed for circulating pump 2.	This parameter is displayed when **Liquid cooling mode** is set to **Diagnostic Mode**, **Diagnostic Mode** is set to **Manual**, and **Battery temperature control mode for diagnosis** is set to one of the following values: ● **Self-circulating** ● **Natural cooling** ● **Active cooling** ● **Waste heat recovery** ● **Heat pump heating** ● **Mixed heating** ● **Electric heating**
Electric heater setting status	Set this parameter to **Off** or **On**.	This parameter is displayed when **Liquid cooling mode** is set to **Diagnostic Mode**, **Diagnostic Mode** is set to **Manual**, and **Battery temperature control mode for diagnosis** is set to **Mixed heating** or **Electric heating**.
Confirm coolant replacement	If the coolant needs to be replaced, select this parameter and click **Submit**.	-
Clear total runtime of EEV 1	To recalculate the total runtime of EEV 1, select this parameter and click **Submit**.	-

 Copyright © Huawei Technologies Co., Ltd.

Parameter	Description	Remarks
Clear total runtime of EEV 2	To recalculate the total runtime of EEV 2, select this parameter and click **Submit**.	-
Clear total runtime of circulating pump 1	To recalculate the total runtime of circulating pump 1, select this parameter and click **Submit**.	-
Clear total runtime of circulating pump 2	To recalculate the total runtime of circulating pump 2, select this parameter and click **Submit**.	-
Clear total runtime of electric heater	To recalculate the total runtime of the electric heater, select this parameter and click **Submit**.	-
Clear total runtime of dehumidifying fan	To recalculate the total runtime of the dehumidifying fan, select this parameter and click **Submit**.	-
Clear total runtime of outdoor fan 1	To recalculate the total runtime of outdoor fan 1, select this parameter and click **Submit**.	-
Clear total runtime of outdoor fan 2	To recalculate the total runtime of outdoor fan 2, select this parameter and click **Submit**.	-
Clear total air filter usage time	To recalculate the total usage time of the air filter, select this parameter and click **Submit**.	-
Clear compressor total runtime	To recalculate the total runtime of the compressor, select this parameter and click **Submit**.	-
Clear total switching times of multi-way valve	To recalculate the total switching times of multi-way valve, select this parameter and click **Submit**.	-

Electricity Revise

Parameter	Description
Adjust total energy yield	A calibrating coefficient for the total energy yield to ensure that the reported energy yield is consistent with the actual energy yield at the grid connection point
Adjusted total power supply from grid	A calibrating coefficient for the total power supply from the grid to ensure that the reported amount of power supplied from the grid is consistent with the actual power supply at the grid connection point

 Copyright © Huawei Technologies Co., Ltd.

Parameter	Description
Historical power clearing	Clear the historical amount of electricity, including the total energy yield and total power supply from the grid.

6.3.14 Setting ESS Parameters (Model 3)

This section describes how to set ESS parameters only for the LUNA-(2236-5015) series.

Procedure

Choose **Monitoring** > **ESS** > **Running Param**, set running parameters, and click **Submit**.

Basic Parameters

Parameter	Description	Remarks
Software Upgrade Health Check	Specifies whether to enable the software update health check.	-
Communication link shutdown time	Specifies the shutdown time after the communication fails.	-
Exhaust fan control module self-test time	Time when the exhaust function is self-tested every day	This parameter is displayed when the number of exhaust fans is greater than 0.
Exhaust fan control module self-test	After the self-test is started, the exhaust fan will be running for a period of time to check its exhaust function. If the exhaust fan does not meet the requirements, the system cannot start.	
Exhaust fan control	After started, the exhaust fan will automatically stop in at least 1 hour. If a combustible gas alarm is generated, the exhaust fan cannot be stopped. The exhaust fan cannot be manually started after the fire response is triggered until the fire alarm is cleared or 24 hours later.	
High-temperature alarm threshold of air conditioner in control unit cabin	Set the high-temperature alarm threshold of air conditioners in the control unit cabin.	-
Low-temperature alarm threshold of air conditioner in control unit cabin	Set the low-temperature alarm threshold of air conditioners in the control unit cabin.	-

 Copyright © Huawei Technologies Co., Ltd.

Parameter	Description	Remarks
Temperature control mode of control unit cabin	Specifies whether the air-cooled air conditioner is scheduled by the PCS (automatic) or manually controlled (manual).	-
DC busbar high temperature alarm	Specifies whether to enable the DC busbar high temperature alarm.	-
Power-off upon DC busbar overtemperature	Specifies whether to enable power-off upon DC busbar overtemperature.	-
DC busbar high temperature alarm threshold	Specifies the high temperature alarm threshold for external power cables connected to the container.	-
Threshold for power-off upon DC busbar overtemperature	Specifies the threshold for power-off due to overtemperature of external power cables connected to the container.	-
Shutdown due to Battery Cabin Door Open	Specifies whether to enable the function of shutdown when the battery cabin door is opened.	-
Shutdown delay upon fire suppression system fault	Specifies the delay for shutdown after a TRSD fault occurs.	-
[WLAN] Wake up	Specifies whether to wake up the WLAN.	-
Battery temperature control mode	Specifies the battery temperature control mode.	-
Power Overload Mode	Specifies whether to enable the power overload mode.	-
Power overload enhancement mode	Specifies whether to enable the power overload enhancement mode. If this parameter is set to **Enable**, the power overload capability is enabled for a short period of time.	-
Associate AC auxiliary power supply with EPO	Specifies whether to enable the function of disconnecting the AC auxiliary power supply when it is associated with EPO.	-
Manual power supply	Enables the function of manual power supply.	-

 Copyright © Huawei Technologies Co., Ltd.

Parameter	Description	Remarks
Anti-rollback	The default setting is **Enable**. ● **Enable**: Enable the anti-rollback function. ● **Disable**: Disable the anti-rollback function.	● This parameter applies only to some models. The actual display may vary. ● If the parameter is set to **Enable**, the software cannot be rolled back to the source version during the software upgrade to prevent vulnerabilities in the source version from being exploited.
Disabling power off Linkage	Disables the function of associated power-off.	-
Restoring the Interworking with the run	Enables the function of associated operation.	-
CAN Communication Recording Switch	Specifies whether to enable CAN communication recording.	-
ModbusTcp Communication Switch Log	Specifies whether to enable Modbus TCP communication recording.	-
ModbusRtu Communication Switch Log	Specifies whether to enable Modbus RTU communication recording.	-
Port Communication Duration Record	Specifies the duration of port communication recording.	-

Temperature Control System

Parameter	Description	Remarks
Silent mode	Set this parameter to **Off** or **On**. If the silent mode is enabled, the noise of the entire cabinet can be reduced.	-

 Copyright © Huawei Technologies Co., Ltd.

Parameter	Description	Remarks
Max. Diagnostic Mode Duration	Specifies the maximum duration of the diagnostic mode. The system automatically exits the diagnostic mode when the specified duration is reached.	-
Coolant replacement interval	Specifies the interval for coolant replacement.	-
Refrigerant system 1 compressor preheating	Specifies whether to start compressor preheating for refrigerant system 1.	-
Refrigerant system 2 compressor preheating	Specifies whether to start compressor preheating for refrigerant system 2.	-
Clear total switching times of multi-way valve	To recalculate the total switching times of multi-way valve, select this parameter and click **Submit**.	-
Dust removal by reverse rotation	Set **Dust removal by reverse rotation** based on the site requirements.	-
Dust removal interval	Set **Dust removal interval** based on the site requirements.	-
Recover auxiliary power supply for liquid cooling	Set **Auxiliary power supply recovery for liquid cooling** to restore the power supply to the liquid thermal management system (LTMS) after certain alarms are generated.	-
Clear total runtime of circulating pump 1	To recalculate the total runtime of the circulating pump, select this parameter and click **Submit**.	-
Clear total air filter usage time	To recalculate the total usage time of the air filter, select this parameter and click **Submit**.	-
Clear total runtime of outdoor fan 1	To recalculate the total runtime of outdoor fan 1, select this parameter and click **Submit**.	-
Clear total runtime of outdoor fan 2	To recalculate the total runtime of outdoor fan 2, select this parameter and click **Submit**.	-
Clear total runtime of outdoor fan 3	To recalculate the total runtime of outdoor fan 3, select this parameter and click **Submit**.	-

 Copyright © Huawei Technologies Co., Ltd.

Parameter	Description	Remarks
Clear compressor 1 total runtime	To recalculate the total runtime of compressor 1, select this parameter and click **Submit**.	-
Clear compressor 2 total runtime	To recalculate the total runtime of compressor 2, select this parameter and click **Submit**.	-
Clear total runtime of EEV 1	To recalculate the total runtime of EEV 1, select this parameter and click **Submit**.	-
Clear total runtime of EEV 2	To recalculate the total runtime of EEV 2, select this parameter and click **Submit**.	-
Clear total runtime of electric heater	To recalculate the total runtime of the electric heater, select this parameter and click **Submit**.	-
Liquid cooling mode	Set this parameter to **Automatic**, **Diagnostic Mode**, or **Maintenance mode**. **Automatic**: The LTMS is automatically controlled. **Diagnostic Mode**: The operating status of the LTMS is diagnosed. **Maintenance mode**: Choose this mode when coolant needs to be refilled or drained.	-
Maintenance mode	Set this parameter to **Standby**, **Refilling**, or **Draining**. The default value is **Standby**. **Standby**: Wait for refilling coolant into or draining coolant from the liquid cooling pipe system. **Refilling**: Refill coolant into the liquid cooling pipe system. **Draining**: Drain coolant from the liquid cooling pipe system.	When you select **Refilling**, the following dialog box is displayed: After refilling is started, wait until the refilling process is complete so that the LTMS can run properly. Manual operations have been performed according to the manual. Are you sure you want to continue? When you select **Draining**, the following dialog box is displayed: After draining is started, you need to drain all the coolant and refill coolant so that the LTMS can run properly. Manual operations have been performed according to the manual. Are you sure you want to continue?

 Copyright © Huawei Technologies Co., Ltd.

Parameter	Description	Remarks
Confirm valve opening	Specifies whether to confirm valve opening.	When **Coolant Replacement Status** is set to **Confirm valve opening** , the app displays the message "Tap **Continue** after confirming that all exhaust valves and pipe ball valves have been opened as required in the manual." This signal is sent after you tap **Continue**.
Confirm coolant replacement	If the coolant needs to be replaced, select this parameter and click **Submit**.	-
Diagnostic Mode	Set this parameter to **Manual** or **Auto**. **Manual**: Some components of the LTMS are manually controlled. **Auto**: The status of the LTMS is checked automatically.	-
Battery temperature control mode for diagnosis	Diagnose the functions of the components involved in the following battery temperature control modes: ● **Self-circulating** ● **Natural cooling** ● **Active cooling** ● **Waste heat recovery** ● **Heat pump heating** ● **Mixed heating** ● **Electric heating** C&I scenario: All modes are applicable. Utility scenario: Only **Self-circulating**, **Natural cooling**, **Active cooling**, and **Electric heating** are applicable.	This parameter is displayed only when **Diagnostic Mode** is set to **Manual**.

 Copyright © Huawei Technologies Co., Ltd.

Parameter	Description	Remarks
Compressor 1 setting status	Specifies the control speed for compressor 1.	This parameter is displayed when **Liquid cooling mode** is set to **Diagnostic Mode**, **Diagnostic Mode** is set to **Manual**, and one of the following conditions is met: ● **Battery temperature control mode for diagnosis** is set to **Active cooling**, **Heat pump heating**, or **Mixed heating**. ● **Internal environment dehumidifying control mode for diagnosis** is set to **On**. ● **Internal environment temperature control mode for diagnosis** is set to **Active cooling**.
Compressor 2 setting status	Set the control speed for compressor 2.	
Electric heater setting status	Set this parameter to **Off** or **On**.	This parameter is displayed when **Liquid cooling mode** is set to **Diagnostic Mode**, **Diagnostic Mode** is set to **Manual**, and **Battery temperature control mode for diagnosis** is set to **Mixed heating** or **Electric heating**.
Setting status of circulating pump 1	Specifies the control speed for circulating pump 1.	This parameter is displayed when **Liquid cooling mode** is set to **Diagnostic Mode**, **Diagnostic Mode** is set to **Manual**, and either of the following conditions is met: ● C&I scenario: **Battery temperature control mode for diagnosis** is set to **Self-circulating**, **Natural cooling**, **Active cooling**, **Heat pump heating**, or **Mixed heating**. ● Utility-scale scenario: **Battery temperature control mode for diagnosis** is set to **Self-circulating**, **Natural cooling**, **Active cooling**, or **Mixed heating**.

 Copyright © Huawei Technologies Co., Ltd.

Parameter	Description	Remarks
Outdoor fan 1 setting status	Specifies the control speed for outdoor fan 1.	This parameter is displayed when **Liquid cooling mode** is set to **Diagnostic Mode**, **Diagnostic Mode** is set to **Manual**, and **Battery temperature control mode for diagnosis** is set to one of the following values: ● **Self-circulating** ● **Natural cooling** ● **Active cooling** ● **Heat pump heating** ● **Mixed heating**
Outdoor fan 2 setting status	Specifies the control speed for outdoor fan 2.	
Outdoor fan 3 setting status	Specifies the control speed for outdoor fan 3.	
Setting status of liquid refill pump	Specifies the status of the liquid refill pump.	This parameter is displayed when **Liquid cooling working mode** is set to **Diagnostic Mode**, **Diagnostic Mode** is set to **Manual**, and **Battery temperature control mode for diagnosis** is set to **Self-circulating**.
Setting status of electric control box mixed-flow fan	Specifies the status of the mixed-flow fan in the electric control box.	-
Setting status of drive cooling fan 1	Specifies the status of drive cooling fan 1.	-
Setting status of drive cooling fan 2	Specifies the status of drive cooling fan 2.	-

6.3.14.1 Setting ESR Parameters

Procedure

Choose **Monitoring** > **ESS** > **ESR** > **Running Param**, set running parameters, and click **Submit**.

Basic Parameters

Parameter	Description
Battery cluster insulation resistance protection threshold	Set **Battery cluster insulation resistance protection threshold**.
Threshold for active balancing	Set **Threshold for active balancing**.

 Copyright © Huawei Technologies Co., Ltd.

Parameter	Description
Activate balancing module	Set **Activate balancing module**.
Location information	Set **Location information**.

Adjustment

Parameter	Description
Total charged energy calibration	Calibrate the total charged energy.
Total discharged energy calibration	Calibrate the total discharged energy.

6.3.15 Setting PID Module Parameters

Procedure

1. Set access parameters.

   Method 1: Click **Auto. Search** to connect to the PID module.

   Method 2: Click **Add Devices**, set access parameters, and click **Add Devices**.

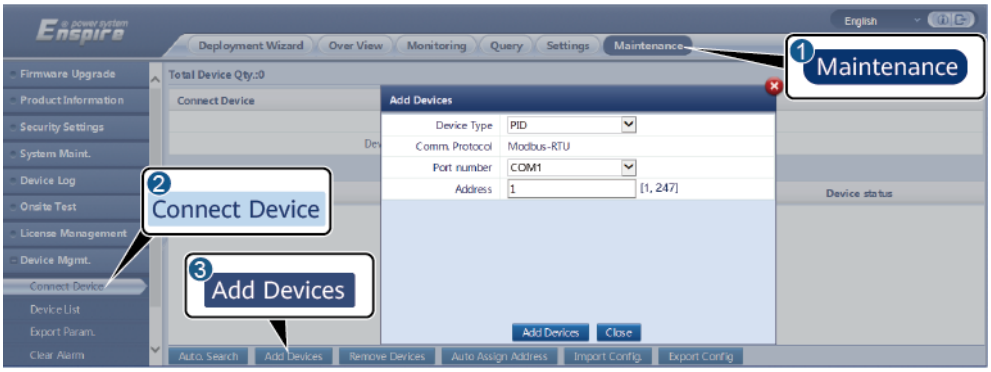

IL03J00017

Table 6-16 Device access parameters

Parameter	Description	Remarks
Device Type	Set this parameter to **PID**.	-

Copyright © Huawei Technologies Co., Ltd.

Parameter	Description	Remarks
Port number	● If the PID-PVBOX uses MBUS for communication, set this parameter to **MBUS**. ● If the PID module uses RS485 for communication, set this parameter to the COM port connected to the PID module.	-
Address	Set this parameter to the communications address of the PID module. ● If the PID module is used as a standalone component, the default communications address is **1**. ● If the SACU is configured with one PID module, the default communications address is **199**. ● If the SACU is configured with two PID modules, the default communications addresses are **199** and **200**.	● The default baud rate of the PID module is **115200**. ● The baud rate of the PID module shall be the same as that of the RS485 COM port on the SmartLogger. If they are inconsistent, choose **Settings** > **Comm. Param.** > **RS485** and change the baud rate of the COM port connected to the PID module.

NOTE

- If no device is found, check whether the RS485 communications cable is securely connected.
- If no device is found, check whether the baud rate of the PID module is consistent with that of the RS485 COM port on the SmartLogger. If they are inconsistent, choose **Settings** > **Comm. Param.** > **RS485** and change the baud rate of the COM port connected to the PID module. The default baud rate of the PID module is **115200**.

2. (Optional) Apply for and load the PID license. Perform this step if you need to use the PID module to detect the ground insulation resistance. Otherwise, skip this step.

   a. Choose **Maintenance > License Management > License application**, select the PID device for which a license is to be applied, click **Export License Appli File**, and purchase a license file from the supplier.

   b. Choose **Maintenance > License Management > License loading**, click **Upload License**, select the PID device to which the license file is to be loaded, and click **Load License**.

NOTE

SmartPID2000 V100R001SPC112, SmartLogger V300R023C00SPC153, and later versions support the smart insulation monitoring function of the PID module. You can check the function in **Monitoring** > **PID** > **About**. If **PN** is **02350XQD-001**, the function is supported. Otherwise, the function is not supported.

3. Set running parameters and click **Submit**.

Figure 6-34 Setting running parameters

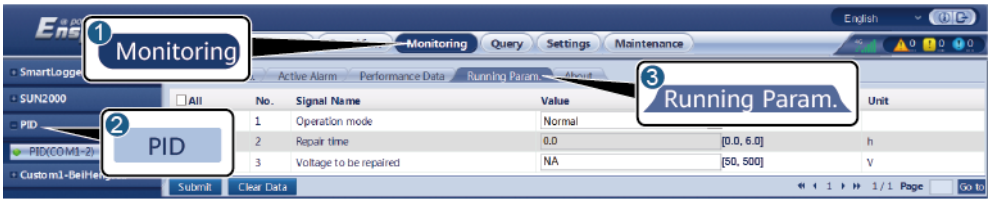

Set PID module running parameters based on the model of the connected device. The PID device models include PID01 and SmartPID2000.

6.3.15.1 Setting PID01 Parameters

6.3.15.1.1 PID Module Running Parameters

NOTE

The parameter list provided in this document includes all configurable parameters Configurable parameters vary depending on the device model. The actual display may vary.

Parameter	Description
Offset mode	Specifies the offset mode of the PID module. • Select **Disabled** if the PID module is not required. • Select **N/PE** if the PID module is required to use voltage output from the inductor virtual midpoint. • Select **PV/PE** if the PID module is required to use voltage output from the negative PV terminal. This mode is applicable only to Huawei SUN8000. • In the SUN2000 scenario, **Automatic** indicates the **N/PE** offset mode.
Output enabled	Specifies whether PID module output is enabled.
PV module type	Specifies the type of the PV module used in the power plant. For details about the PV module type, consult the manufacturer.
PV/PE offset voltage	Specifies the DC output voltage when the offset mode is set to PV/PE. • If the PV module type is P, set this parameter to **P-type**. In this case, the output voltage of the PID module is positive. • If the PV module type is N, set this parameter to **N-type**. In this case, the output voltage of the PID module is negative.

 Copyright © Huawei Technologies Co., Ltd.

Parameter	Description
Operation Mode	Specifies the working mode of the PID module. ● **Manual** mode: If **Offset mode** is set to **N/PE** or **PV/PE**, and **Output enabled** is set to **Enable**, the PID module outputs data based on **Output voltage (manual)**. ● **Automatic** mode: After the PID module and inverter communicate with the SmartLogger properly, the PID module automatically runs. **NOTE** ● Before the first power-on, to check whether the PID functions properly, it is recommended that **Operation Mode** be set to **Manual**. ● After checking that the PID module functions properly, set **Operation Mode** to **Automatic**.
Output voltage (manual)	Specifies the output voltage. **NOTE** After this parameter is set and the output from the PID module becomes stable, use a multimeter that is set to the DC position to measure the three-phase (A, B, and C) voltages of the power grid to the ground, and check whether the voltages are the same as the configured values.
Maximum DC voltage	Specifies the PV-PE voltage when the normal operation mode is used. If the PV module type is P, the parameter value indicates the highest DC voltage between PV+ and PE. If the PV module type is N, the parameter value indicates the highest DC voltage between PV– and PE.
Maximum output voltage	Specifies the maximum output voltage of the PID module. If the offset mode is **PV/PE**, the parameter value indicates the highest DC output voltage between PV and PE. If the offset mode is **N/PE**, the parameter value indicates the highest DC output voltage between N and PE.
IMD access	Specifies whether the PID module and insulation monitor device (IMD) can operate in cycle mode. Only the IMDs of mainstream suppliers such as DOLD and BENDER are supported, and the IMDs must have enabled dry contacts. **NOTICE** You can set **Periodic PID runtime**, **Periodic IMD runtime**, and **IMD control dry contact** only when **IMD access** is set to **Enable**.
Periodic PID runtime	Specifies the running duration of the PID module when the PID module and IMD operate in cycle mode. The IMD is shut down when the PID module is operating.
Periodic IMD runtime	Specifies the running duration of the IMD when the PID module and IMD operate in cycle mode. The PID module is standby when the IMD is running.

 Copyright © Huawei Technologies Co., Ltd.

Parameter	Description
IMD control dry contact	Specifies the dry contact No. over which the SmartLogger controls the IMD. Set appropriate ports based on the cable connections between the IMD and the SmartLogger.
PV module compensation voltage direction	Specifies the compensation direction of the PID module. ● **PV– po**: The voltage between the PV– and the ground is increased to a value greater than 0 V through voltage compensation. Select **PV– po** for P-type PV modules or the N-type PV modules that comprise the cells whose positive and negative polarities are on different sides. For example, P-type PV modules, HIT, CIS, thin-film PV modules, and CdTe PV modules meet the requirement for PV– positive offset. ● **PV+ ne**: The voltage between the PV+ and the ground is decreased to lower than 0 V through voltage compensation. Select **PV+ ne** for the N-type PV modules that comprise the cells whose positive and negative polarities are on the same side. **NOTE** When designing a PV plant, the design institute and user should confirm with the PV module vendor about the direction of voltage compensation for the anti-PID effect of PV modules.
Working mode	Specifies the working mode of the PID module. ● **Manual**: The PID module provides output based on **Output voltage (manual)**. ● **Automatic** mode: After the PID module and inverter communicate with the SmartLogger properly, the PID module automatically runs. **NOTE** ● Before the first power-on, to check whether the PID functions properly, it is recommended that **Operation Mode** be set to **Manual**. ● After checking that the PID module functions properly, set **Operation Mode** to **Automatic**.
Maximum system DC-to-ground withstand voltage	Specifies the voltages between the PV side and the ground and between the AC side and the ground in normal mode. Specifies the lower threshold of the maximum voltage range between the inverter DC side (including the inverter, PV module, cable, SPD, and switch) and the ground. The default value is 1000 V. For a 1500 V inverter, the recommended value is 1500 V.

 Copyright © Huawei Technologies Co., Ltd.

Parameter	Description
AC-to-ground resistance alarm threshold	Specifies the alarm threshold for the impedance between the AC side of the PID module and the ground. You can set an alarm threshold for the impedance between the AC grid and the ground for the PID module. If the detected impedance is below the threshold, the PID module will generate an alarm.
Compensation offset voltage	Specifies the compensation offset voltage between PV and the ground after the PID module operates stably. The absolute value ranges from 0 V to 500 V, and the default value is 50 V. ● If PV module compensation voltage direction is set to **PV– po**, this parameter indicates the positive voltage between the PV– and the ground. The compensation range is 0 V to +500 V. ● If PV module compensation voltage direction is set to **PV+ ne**, this parameter indicates the negative voltage between the PV+ and the ground. The compensation range is –500 V to 0 V. **NOTE** ● If **Compensation offset voltage** is set to **500 V**, the PID module provides the maximum output to enhance the voltage compensation effect. The output voltage amplitude of the PID module is automatically capped to ensure the safety of a PV plant. The output voltage amplitude is also related to the maximum system DC-to-ground withstand voltage and maximum output voltage. ● After this parameter is set, wait until the PID module runs properly and use a multimeter to measure the voltage between the PV input terminal of the inverter and the ground. (**PV– po**: the voltage between the PV– and the ground is greater than or equal to 0 V; **PV+ ne**: the voltage between the PV+ and the ground is less than or equal to 0 V.)
Clear data	Clears the active alarms and historical alarms stored on the PID module. You can select **Clear data** to clear active alarms and historical alarms for the PID module.

6.3.15.1.2 PID-PVBOX Running Parameters

Parameter	Description
Operating mode	Specifies the current working mode of the PID module. ● Before setting this parameter to **Manual**, ensure that the inverters in the PV array have shut down and the DC switches of the inverters have been turned off. This working mode is used during startup commissioning or fault locating. In this condition, the PID-PVBOX delivers the output voltage based on the value of the commissioned output voltage. ● After checking that the PID module is running properly, set this parameter to **Automatic**.

 Copyright © Huawei Technologies Co., Ltd.

Parameter	Description
Output voltage (manual)	Specifies the output voltage when the PID module works in commissioning mode.
Repair time	Specifies the recovery time for each day.
Voltage to be repaired	Specifies the output voltage when the PID module works in commissioning mode.

6.3.15.1.3 PID-SSC Running Parameters

Parameter	Description
Operating mode	Specifies the current working mode of the PID module. ● Set this parameter to **Manual** during commissioning after deployment or fault locating. In this case, the PID-SSC delivers the output voltage based on the value of the commissioned output voltage. ● After checking that the PID module is running properly, set this parameter to **Automatic**.
Output voltage (manual)	Specifies the output voltage when the PID module works in commissioning mode. It is recommended that **Output voltage (manual)** be set to a value greater than 250 V.

6.3.15.2 Setting SmartPID2000 Parameters

Table 6-17 Setting PID running parameters

Tab	Parameter	Description
Running Param.	**Offset mode**	Specifies the offset mode of the PID module. ● **Disabled**: The PID module is not required. ● **N/PE**: The PID module is required to output voltage from the grid.

 Copyright © Huawei Technologies Co., Ltd.

Tab	Parameter	Description
	PV module compensation voltage direction	Specifies the compensation direction of the PID module. ● **PV– po**: The voltage between the PV– and the ground is increased to a value greater than 0 V through voltage compensation. Select **PV– po** for P-type PV modules or the N-type PV modules that comprise the cells whose positive and negative polarities are on different sides. For example, P-type PV modules, HIT, CIS, thin-film PV modules, and CdTe PV modules meet the requirement for PV– positive offset. ● **PV+ ne**: The voltage between the PV+ and the ground is decreased to lower than 0 V through voltage compensation. Select **PV+ ne** for the N-type PV modules that comprise the solar cells whose positive and negative polarities are on the same side. **NOTE** When designing a PV plant, the design institute and user should confirm with the PV module vendor about the direction of voltage compensation for the anti-PID effect of PV modules.
	Working mode	Specifies the working mode of the PID module. ● **Automatic**: In normal mode, the PID module operates automatically after the PID module, inverter, and SmartLogger communicate with each other properly. ● **Manual**: In commissioning mode, no inverter needs to be connected. The PID module can run independently and is used for commissioning only. **NOTICE** ● **Compensation offset voltage** is displayed and can be set only when **Working mode** is set to **Automatic**. ● **Output voltage (manual)** is displayed and can be set only when **Working mode** is set to **Manual**. ● Before the first power-on, to check whether the PID module functions properly, it is recommended that **Working mode** be set to **Manual**. If the PID module functions properly, set **Working mode** to **Automatic**.

 Copyright © Huawei Technologies Co., Ltd.

Tab	Parameter	Description
	Compensation offset voltage	Specifies the PV-ground compensation offset voltage after the PID module works stably in automatic mode. The absolute value ranges from 0 V to 500 V, and the default value is 50 V. ● If PV module compensation voltage direction is set to **PV– po**, this parameter indicates the positive voltage between the PV– and the ground. The compensation range is 0 V to +500 V. ● If PV module compensation voltage direction is set to **PV + ne**, this parameter indicates the negative voltage between the PV+ and the ground. The compensation range is –500 V to 0 V. ● If **Compensation offset voltage** is set to 500 V, the PID module provides the maximum output to enhance the voltage compensation effect. The output voltage amplitude of the PID module is automatically capped to ensure the safety of a PV plant. The output voltage amplitude is also related to the maximum system DC-to-ground withstand voltage and maximum output voltage. ● After this parameter is set, wait until the PID module runs properly and use a multimeter to measure the voltage between the PV input terminal of the inverter and the ground. (**PV– po**: the voltage between the PV– and the ground is greater than or equal to 0 V; **PV+ ne**: the voltage between the PV+ and the ground is less than or equal to 0 V.)
	Output voltage (manual)	Specifies the step-up voltage when the working mode is manual. The value of this parameter ranges from 0 V to 800 V. It is recommended that the commissioning output voltage for a 1000 V/1100 V inverter be set to a value ranging from 50 V to 400 V, and that the commissioning output voltage for the 1500 V inverter be set to a value ranging from 50 V to 600 V. **NOTE** **Maximum output voltage** can be displayed and set based on the actual networking if there is no battery in the network.

 Copyright © Huawei Technologies Co., Ltd.

Tab	Parameter	Description
	Maximum output voltage	The value of this parameter ranges from 0 V to 800 V. The default value is 500 V. For a 1500 V inverter, the recommended value is 800 V. ● For a 1000 V/1100 V inverter, the value ranges from 0 V to 550 V. The parameter value indicates the maximum DC step-up voltage between PV and the ground. ● For a 1500 V inverter, the value ranges from 0 V to 800 V. The parameter value indicates the maximum DC step-up voltage between PV and the ground. **NOTICE** **Maximum output voltage** can be displayed and set based on the actual networking if there is no battery in the network.
	Maximum system DC-to-ground withstand voltage	Specifies the voltages between the PV side and the ground and between the AC side and the ground in automatic mode. The value of this parameter ranges from 500 V to 1500 V. Specifies the lower threshold of the maximum voltage range between the inverter DC side (including the inverter, PV module, cable, SPD, and switch) and the ground. The default value is 1000 V. For a 1500 V inverter, the recommended value is 1500 V. **NOTICE** **Maximum system DC-to-ground withstand voltage** can be displayed and set based on the actual networking if there is no battery in the network.
	IMD access	Specifies whether the PID module and insulation monitor device (IMD) can operate in cycle mode. ● If an IMD is connected to the system and works with the PID module in cycle mode, select **Enable**. ● If no IMD is connected, set this parameter to **Disable**. **NOTICE** ● This parameter can be displayed and set only when **Smart insulation monitoring** is set to **Disable**. ● **Periodic PID runtime** and **Periodic IMD runtime** can be displayed and set only when **IMD access** is set to **Enable**. ● If an IMD is connected, set **PID protection at night** of the inverter to **Disable**.
	Periodic PID runtime	Specifies the running duration of the PID module when the PID module and IMD operate in cycle mode. The IMD is shut down when the PID module is running.
	Periodic IMD runtime	Specifies the running duration of the IMD when the PID module and IMD operate in cycle mode. The PID module is standby when the IMD is running.

 Copyright © Huawei Technologies Co., Ltd.

Tab	Parameter	Description
	Smart insulation monitoring[1]	If no IMD is configured in the actual networking, you are advised to purchase and load the PID license. After the license is successfully loaded, set **Smart insulation monitoring** to **Enable** to enable the PID-to-ground insulation resistance detection function. If you do not need this function, set this parameter to **Disable**. **NOTICE** • **IMD access** is shielded only when this parameter is set to **Enable**. • **System-to-ground insulation resistance** is displayed only when this parameter is set to **Enable**. • **System-to-ground resistance alarm threshold**, **System-to-ground resistance warning threshold**, **System-to-ground impedance detection time**, **Trigger ACB tripping upon IMD alarm**, and **Corresponding transformer winding** can be displayed and set only when **Smart insulation monitoring** is set to **Enable**. • In the PV-only scenario, if **Smart insulation monitoring** is set to **Enable**: 1. Choose **Monitoring** > **Inverter** > **Running Param.** > **Feature Parameters** and check whether **PID protection at night** is set to **Enable**. If it is set to **Disable**, manually set it to **Enable**. 2. Choose **Monitoring** > **Inverter** > **Running Param.** > **Feature Parameters** and check whether the setting of **PID compensation direction** is consistent with that of **PV module compensation voltage direction** in **Monitoring** > **PID** > **Running Param.**. If the settings are inconsistent, change the setting of **PID compensation direction**.
	System-to-ground resistance alarm threshold[1]	Specifies the alarm threshold for the system-to-ground resistance of the PID module. When the resistance is less than this threshold, the PID module will generate an alarm. The recommended value ranges from 5.0 kΩ to 50.0 kΩ. The default value is 8.0 kΩ. System-to-ground resistance alarm threshold < System-to-ground resistance warning threshold.
	System-to-ground resistance warning threshold[1]	Specifies the warning threshold for the system-to-ground resistance of the PID module. When the resistance is less than this threshold, the PID module will generate a warning. The recommended value ranges from 5.0 kΩ to 50.0 kΩ. The default value is 10.0 kΩ. System-to-ground resistance alarm threshold < System-to-ground resistance warning threshold.
	System-to-ground impedance detection time[1]	Specifies the system-to-ground impedance detection time. When the impedance is lower than the detection point for a period longer than the detection time, an alarm or warning is generated. The value of this parameter ranges from 10s to 1800s. The default value is 100s.

 Copyright © Huawei Technologies Co., Ltd.

Tab	Parameter	Description
	Trigger ACB tripping upon IMD alarm[1]	Specifies whether to trigger ACB tripping for the transformer station when a system-to-ground resistance alarm is generated. Set this parameter to **Disable** or **Enable** based on the actual application scenario. If this parameter is set to **Enable**, the entire system shuts down when a system-to-ground resistance alarm is generated.
	Corresponding transformer winding[1]	Configure the winding number of the transformer station corresponding to the current PID module. Select **Low-voltage cabinet A** or **Low-voltage cabinet B** based on the actual application scenario.
Running Info.	**System-to-ground insulation resistance**[2]	When the system-to-ground insulation resistance is lower than the system-to-ground resistance alarm threshold and warning threshold, the system generates an alarm.
Note [1]: This parameter can be displayed and set in SmartPID2000 V100R001SPC112, SmartLogger V300R023C00SPC153, and later versions. Note [2]: This parameter can be displayed in SmartPID2000 V100R001SPC112, SmartLogger V300R023C00SPC153, and later versions.		

6.3.16 Setting Meter Parameters

6.3.16.1 Setting DL/T645 Meter Parameters

Procedure

Step 1 Set access parameters and click **Add Devices**.

Figure 6-35 Setting access parameters

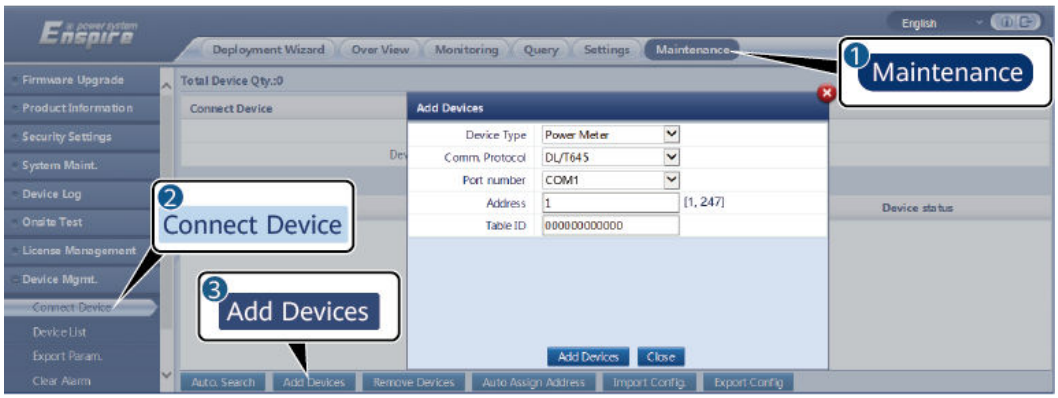

IL03J00019

Parameter	Description
Device Type	Set this parameter to **Power Meter**.
Comm. Protocol	Set this parameter to **DL/T645**.
Port number	Set this parameter to the COM port connected to the meter.
Address	Set this parameter to the communication address of the meter.
Table ID	Set this parameter to the meter ID.

Step 2 Choose **Monitoring** > **Meter** > **Running Param.**, set running parameters, and click **Submit**.

Parameter	Description
Protocol version	Select **DL/T645-2007** or **DL/T645-1997** based on the protocol version of the meter.
Number of lead bytes	Retain the default value unless otherwise specified.
Voltage change ratio	● Set this parameter to **1** if the meter uploads the primary value. ● Set this parameter based on the actual transformer ratio if the meter uploads the secondary value. **NOTE** If both the power meter and the SmartLogger support the settings of the voltage transformer ratio and current transformer ratio, you can only set them either on the power meter or the SmartLogger. You are advised to set these parameters on the power meter.
Current change ratio	
Meter usage	Meters include export+import meters, production meters, consumption meters, charger meters, and external production meters. ● **Export+import meter**: used for grid-connection point control. Each array allows only one export +import meter to be connected. ● **Production meter**: PV output meter. Multiple production meters can be connected. ● **Consumption meter**: load consumption meter. Multiple consumption meters can be connected. ● **Charger meter**: charger consumption meter. Multiple charger meters can be connected. This parameter can be configured only in V300R023C00SPC160 and later versions. ● **Ext. production meter**: third-party PV output meter. Multiple external production meters can be connected.

 Copyright © Huawei Technologies Co., Ltd.

Parameter	Description
Meter access direction[1]	This switch is used when the physical wiring of the meter is reversely connected. You can adjust the software switch to avoid wiring reconstruction of the meter. Only the following three scenarios are supported. If **Meter access direction** is incorrectly set, data will be incorrectly reported. ● **Positive**: The default value is **Positive**, which applies to the scenario where cables are correctly connected to the meter. ● **Reverse**: If the meter is reversely connected and the NMS does not support reverse connection, set this parameter to **Reverse**. The SmartLogger automatically adjusts the power and other data of the meter to ensure data accuracy for the plant and meter. ● **Reverse_Report raw data**: If the meter is reversely connected and the NMS supports reverse connection[2], set this parameter to **Reverse_Report raw data**. This parameter is valid only for **Export+import meter**. The SmartLogger reports the original data of the meter to the NMS, and the NMS adjusts the data such as power.
Note [1]: **Meter access direction** can be configured only in V300R001C00SPC609 and later, V800R021C10SPC140 and later, and V300R023C00 and later. Note [2]: If cables are reversely connected to the meter and the NMS can correctly display the real-time data of the meter, it is considered that the NMS supports reverse connection. That is, the NMS reverses the active power, reactive power, power factor, phase A active power, phase B active power, and phase C active power, replaces the total positive active energy and total negative active energy with each other, and replaces the total positive reactive power and total negative reactive power with each other.	

NOTE

- When **Meter access direction** is set to **Positive** or **Reverse**, **Electric meter power direction** must be set to **Positive**. **Electric meter power direction** is set in the grid connection with limited power under active power control and power closed-loop control under reactive power control.
- When **Meter access direction** is set to **Reverse_Report raw data**, **Electric meter power direction** must be set to **Reverse**. **Electric meter power direction** is set in the grid connection with limited power under active power control and power closed-loop control under reactive power control.

----End

 Copyright © Huawei Technologies Co., Ltd.

6.3.16.2 Setting Modbus-RTU Meter Parameters

Procedure

Step 1 Set access parameters and click **Add Devices**.

Figure 6-36 Setting access parameters

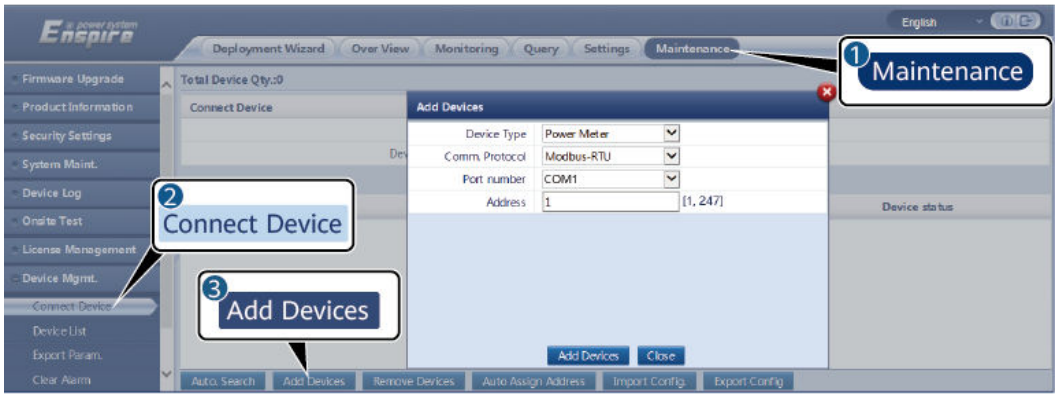

IL03J00022

Parameter	Description
Device Type	Set this parameter to **Power Meter**.
Comm. Protocol	Set this parameter to **Modbus-RTU**.
Port number	Set this parameter to the COM port connected to the meter.
Address	Set this parameter to the communication address of the meter.

Step 2 Choose **Monitoring** > **Meter** > **Running Param.**, set meter parameters, and click **Submit**.

- When the model of the connected meter is in the **Intelligent Power Meter Type** drop-down list, set the parameters as follows.

Parameter	Description
Intelligent Power Meter Type	Set this parameter to the corresponding meter model.

Copyright © Huawei Technologies Co., Ltd.

Parameter	Description
Voltage change ratio	• Set this parameter to **1** if the meter uploads the primary value. • Set this parameter based on the actual transformer ratio if the meter uploads the secondary value. **NOTE** If both the power meter and the SmartLogger support the settings of the voltage transformer ratio and current transformer ratio, you can only set them either on the power meter or the SmartLogger. You are advised to set these parameters on the power meter.
Current change ratio	
Meter usage	Meters include export+import meters, production meters, consumption meters, charger meters, and external production meters. • **Export+import meter**: used for grid-connection point control. Each array allows only one export +import meter to be connected. • **Production meter**: PV output meter. Multiple production meters can be connected. • **Consumption meter**: load consumption meter. Multiple consumption meters can be connected. • **Charger meter**: charger consumption meter. Multiple charger meters can be connected. This parameter can be configured only in V300R023C00SPC160 and later versions. • **Ext. production meter**: third-party PV output meter. Multiple external production meters can be connected.

Copyright © Huawei Technologies Co., Ltd.

Parameter	Description
Meter access direction[1]	This switch is used when the physical wiring of the meter is reversely connected. You can adjust the software switch to avoid wiring reconstruction of the meter. Only the following three scenarios are supported. If **Meter access direction** is incorrectly set, data will be incorrectly reported. ● **Positive**: The default value is **Positive**, which applies to the scenario where cables are correctly connected to the meter. ● **Reverse**: If the meter is reversely connected and the NMS does not support reverse connection, set this parameter to **Reverse**. The SmartLogger automatically adjusts the power and other data of the meter to ensure data accuracy for the plant and meter. ● **Reverse_Report raw data**: If the meter is reversely connected and the NMS supports reverse connection[2], set this parameter to **Reverse_Report raw data**. This parameter is valid only for **Export+import meter**. The SmartLogger reports the original data of the meter to the NMS, and the NMS adjusts the data such as power.
Note [1]: **Meter access direction** can be configured only in V300R001C00SPC609 and later, V800R021C10SPC140 and later, and V300R023C00 and later. Note [2]: If cables are reversely connected to the meter and the NMS can correctly display the real-time data of the meter, it is considered that the NMS supports reverse connection. That is, the NMS reverses the active power, reactive power, power factor, phase A active power, phase B active power, and phase C active power, replaces the total positive active energy and total negative active energy with each other, and replaces the total positive reactive power and total negative reactive power with each other.	

NOTE

- When **Meter access direction** is set to **Positive** or **Reverse**, **Electric meter power direction** must be set to **Positive**. **Electric meter power direction** is set in the grid connection with limited power under active power control and power closed-loop control under reactive power control.
- When **Meter access direction** is set to **Reverse_Report raw data**, **Electric meter power direction** must be set to **Reverse**. **Electric meter power direction** is set in the grid connection with limited power under active power control and power closed-loop control under reactive power control.

- If the connected meter is of another model, set the parameters as follows.

Parameter	Description
Intelligent Power Meter Type	Set this parameter to **Other**.
Read function code	**Read holding register 03H** and **Read input register 04H** are supported. Set this parameter based on the vendor's protocol.
Read mode	**Multiple read** and **Single read** are supported.
Word ordering+Byte ordering	**Big endian** and **Little endian** are supported. Set this parameter based on the vendor's protocol.
Start address	When **Read mode** is set to **Multiple read**, set the start address.
End address	When **Read mode** is set to **Multiple read**, set the end address.
Voltage change ratio	● Set this parameter to **1** if the meter uploads the primary value. ● Set this parameter based on the actual transformer ratio if the meter uploads the secondary value.
Current change ratio	
Signal parameters **NOTE** Signal parameters include **Signal Name**, **Signal address**, **Number of Registers**, **Gain**, **Data Type**, and **Unit**.	Set this parameter based on the vendor's protocol. **NOTE** If the power meter can collect a certain signal, set **Signal address** to the address of the corresponding register. If not, set **Signal address** to **65535**.

----End

6.3.17 Setting EMI Parameters

6.3.17.1 Setting Modbus-RTU EMI Parameters

Procedure

Step 1 Set access parameters and click **Add Devices**.

Figure 6-37 Setting access parameters

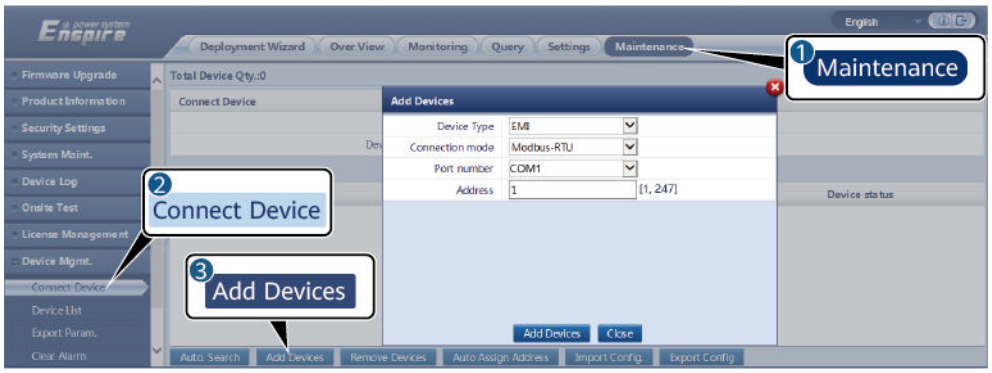

IL03J00023

Parameter	Description
Device Type	Set this parameter to **EMI**.
Connection mode	Set this parameter to **Modbus-RTU**.
Port number	Set this parameter to the serial number of the COM port connected to the EMI.
Address	Set this parameter to the communication address of the EMI.

Step 2 Choose **Monitoring** > **EMI** > **Running Param.**, set running parameters and click **Submit**.

- If the model of the connected EMI is displayed in the **EMI model** drop-down list box, set parameters as follows.

Parameter	Description
EMI model	Set this parameter to the model of the connected EMI.
Synchronize Environment Data	You are advised to retain the default value **Disable**. **NOTE** When this parameter is set to **Enable**, the SmartLogger transmits the wind speed and direction data to the solar inverter in a PV plant with the tracking system.

 Copyright © Huawei Technologies Co., Ltd.

Parameter	Description
Threshold of fast synchronization of wind speeds	● This parameter can be manually set. The value ranges from 15.0 to 30.0. ● When the actual wind speeds collected by all running EMIs are within the threshold of fast synchronization of wind speeds, all EMIs synchronize the real-time wind speeds to inverters every minute by default. The inverters forward the real-time wind speeds to trackers. ● When the actual wind speed collected by any running EMI exceeds the threshold, all running EMIs will send the real-time wind speeds five times at an interval of 10s. After that, the real-time wind speeds are synchronized to the inverters every minute.
Master/Slave	When the SmartLogger connects to multiple EMIs, set one of them to **master mode**. The solar inverter performance data displayed is the data of the EMI in **master mode**.

- If the connected EMI is a split EMI that supports Modbus-RTU, set parameters as follows.

Parameter	Description
EMI model	Set this parameter to **Sensor(ADAM)**.
Synchronize Environment Data	You are advised to retain the default value **Disable**. **NOTE** When this parameter is set to **Enable**, the SmartLogger transmits the wind speed and direction data to the solar inverter in a PV plant with the tracking system.
Master/Slave	When the SmartLogger connects to multiple EMIs, set one of them to **master mode**. Both the inverter performance data and plant performance data pages display data on the EMI in **master mode**. **NOTE** ● If a single EMI is set to **master mode** or **slave mode**, the EMI data is displayed in both the inverter performance data and plant performance data pages. ● When the SmartLogger connects to multiple EMIs, only one EMI can be set to **master mode**. If multiple EMIs are set to **master mode**, only the last configuration takes effect, that is, the last EMI is set to **master mode** and the other EMIs are automatically switched to **slave mode**. ● If multiple EMIs are connected to the SmartLogger and these EMIs are set to **slave mode**, the performance data of the first connected EMI is displayed in both the inverter performance data and plant performance data pages.

 Copyright © Huawei Technologies Co., Ltd.

Parameter	Description
Read function code	Set this parameter to **Read holding register 03H** or **Read holding register 04H** based on the protocol adopted by the vendor.
Data reporting mode	Set this parameter to **Integer** or **Floating point** based on the protocol adopted by the vendor.
Word ordering	Set this parameter to **Big endian** or **Little endian** based on the protocol adopted by the vendor.
Read mode	The value can be **Multiple read** or **Single read**.
Start address	If **Read mode** is set to **Multiple read**, set the start address for reading.
End address	If **Read mode** is set to **Multiple read**, set the end address for reading.
Signal parameters **NOTE** Signal parameters include **Signal Name**, **Signal address**, **Lower Thres.**, **Upper Thres.**, **Spec**, **Start (mV/mA)**, **End (mV/mA)**, and **Unit**.	Set this parameter based on the vendor's protocol. **NOTE** If the EMI can collect a signal, set **Signal address** for the signal to the corresponding register address. If the EMI cannot collect a signal, set **Signal address** for the signal to **65535**.

- If the connected EMI is of another model, set parameters as follows.

Parameter	Description
EMI model	Set this parameter to **Other**.
Synchronize Environment Data	You are advised to retain the default value **Disable**. **NOTE** When this parameter is set to **Enable**, the SmartLogger transmits the wind speed and direction data to the solar inverter in a PV plant with the tracking system.
Master/Slave	When the SmartLogger connects to multiple EMIs, set one of them to **master mode**. The solar inverter performance data displayed is the data of the EMI in **master mode**.
Read function code	Set this parameter to **Read holding register 03H** or **Read holding register 04H** based on the protocol adopted by the vendor.
Data reporting mode	Set this parameter to **Integer** or **Floating point** based on the protocol adopted by the vendor.
Word ordering	Set this parameter to **Big endian** or **Little endian** based on the protocol adopted by the vendor.

 Copyright © Huawei Technologies Co., Ltd.

Parameter	Description
Read mode	The value can be **Multiple read** or **Single read**.
Start address	If **Read mode** is set to **Multiple read**, set the start address for reading.
End address	If **Read mode** is set to **Multiple read**, set the end address for reading.
Signal parameters **NOTE** Signal parameters include **Signal Name**, **Signal address**, **Gain**, **Offset**, and **Unit**.	Set this parameter based on the vendor's protocol. **NOTE** If the EMI can collect a signal, set **Signal address** for the signal to the corresponding register address. If the EMI cannot collect a signal, set **Signal address** for the signal to **65535**.

----End

6.3.17.2 Setting AI EMI Parameters

Procedure

Step 1 Set access parameters and click **Add Devices**.

Figure 6-38 Setting access parameters

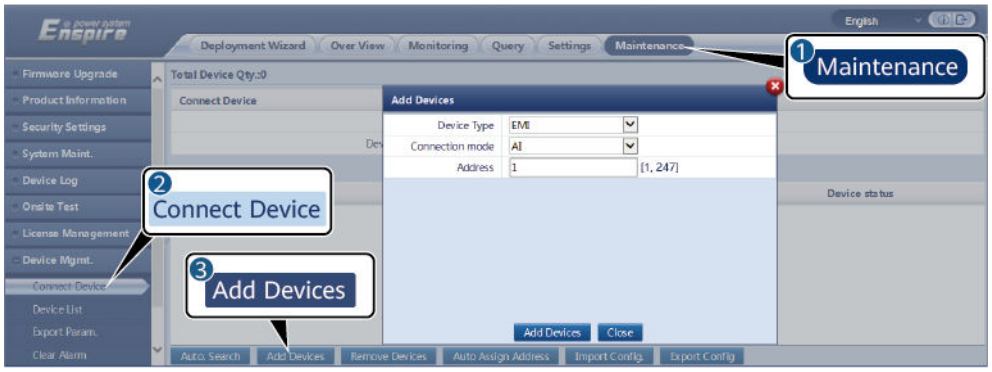

Parameter	Description
Device Type	Set this parameter to **EMI**.
Connection mode	Set this parameter to **AI**.
Address	Set this parameter to the communication address of the EMI.

Step 2 Choose **Monitoring** > **EMI(AI)** > **Running Param.**, set running parameters and click **Submit**.

 Copyright © Huawei Technologies Co., Ltd.

Parameter	Description
Synchronize Environment Data	You are advised to retain the default value **Disable**. **NOTE** When this parameter is set to **Enable**, the SmartLogger transmits the wind speed and direction data to the solar inverter in a PV plant with the tracking system.
Master/Slave	When the SmartLogger connects to multiple EMIs, set one of them to **master mode**. The solar inverter performance data displayed is the data of the EMI in **master mode**.
Signal parameters **NOTE** Signal parameters include **Signal Name**, **Port number**, **Lower Thres.**, **Upper Thres.**, **Start (V/mA)**, **End (V/mA)**, and **Unit**.	Set these parameters as required. **NOTE** When you need to change the configured port number, set **Port number** to **No** first, then to the required port number.

Step 3 If **Port number** is set to the number of the connected PT port, click **PT T Correction** to correct the temperature.

----End

6.3.18 Setting STS Parameters

The STS can be connected to the SmartLogger over RS485 or FE. If the STS is connected to the SmartLogger over RS485, you need to manually add devices and set access parameters. If the STS is connected over FE, the SmartLogger automatically identifies the STS.

Procedure

Step 1 (Optional) If the STS connects to the SmartLogger over RS485, click **Add Devices** and set access parameters.

Figure 6-39 Setting access parameters

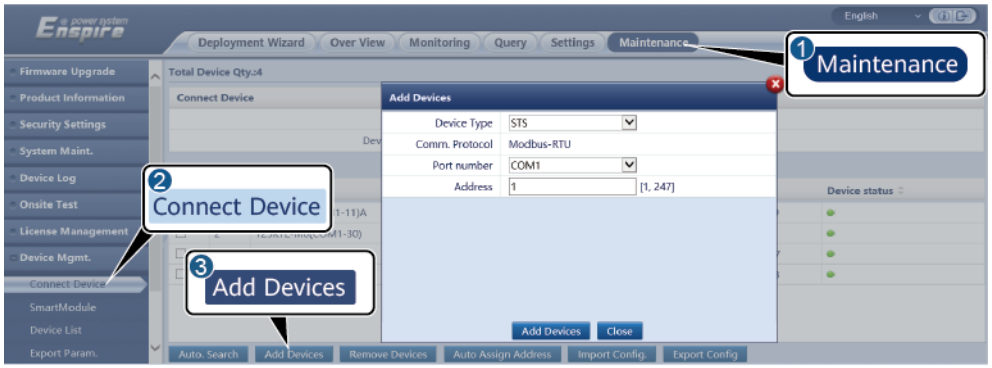

IL04J00006

 Copyright © Huawei Technologies Co., Ltd.

Parameter	Description
Device Type	Set this parameter to **STS**.
Port number	Set this parameter to the number of the COM port connected to the STS.
Address	Set this parameter to the communications address of the STS.

Step 2 Choose **Monitoring** > **STS**, set device monitoring parameters, and click **Submit**.

Tab	Function	Description
Teleindication	Views the status parameters of the device, such as the switched-on or switched-off state.	-
Telemetering	Views the real-time data of the device, such as the voltage.	-
Telecontrol	Sets status control parameters, such as the parameter for controlling switch-on or switch-off.	Set this parameter as required.
Performance Data	Views or exports the performance data of the device.	-
Running Param.	Sets the standby signals for teleindication, telemetering, and teleadjust.	Set this parameter as required.
Active Alarm	Queries active alarms.	-
User-Defined Parameters	Allows users to customize DI/DO signal linkage.	-
Sync	Backs up STS data to the SmartLogger.	-
About	Queries communication information.	-

Table 6-18 O&M parameters

Parameter	Description
O&M via WLAN connection	Specifies the policy of O&M via WLAN connection for the STS.
WLAN wakeup	Specifies whether to wake up the WLAN.
SSID	Specifies the WLAN name.
Password	Specifies the WLAN password.
Manual fan self-check	Starts the fan self-check.

 Copyright © Huawei Technologies Co., Ltd.

Parameter	Description
Fan self-check status	Displays the self-check status.
Resume Version	Starts the version rollback.
Controller location detection	Starts the controller location detection.
Controller location detection status	Displays the controller location detection status.
Ring network connection status	Displays the current ring network connection status.
SSH	Specifies whether to enable SSH.
Anti-rollback	Specifies whether the STS supports version rollback through upgrade.
Corrected positive active energy of low-voltage cabinet A	Correct the values as required.
Corrected negative active energy of low-voltage cabinet A	
Corrected positive reactive energy of low-voltage cabinet A	
Corrected negative reactive energy of low-voltage cabinet A	
Corrected positive active energy of low-voltage cabinet B	
Corrected negative active energy of low-voltage cabinet B	

Copyright © Huawei Technologies Co., Ltd.

Parameter	Description
Corrected positive reactive energy of low-voltage cabinet B	
Corrected negative reactive energy of low-voltage cabinet B	

Step 3 Choose **Settings** > **Other Parameters** and set **STS overtemperature protection** as required.

----End

6.3.19 Setting Custom Device Parameters

Context

The SmartLogger can connect to third-party devices supporting the Modbus RTU protocol, such as transformer stations and EMIs. The protocol information points vary depending on vendors. Therefore, you need to configure a protocol information file in .cfg format. To connect devices to the SmartLogger, the supplier or Huawei engineers need to modify the parameters in the device configuration table file delivered with the version based on device requirements, generate a protocol information file in .cfg format, and import the file to the SmartLogger.

The supported device types are **Custom Device1** to **Custom Device10**. The corresponding configuration file names are **modbus_equip_custom_1.cfg** to **modbus_equip_custom_10.cfg**. Multiple devices of the same type can be connected.

Procedure

Step 1 Configure the protocol information point file in .cfg format and import the file to the SmartLogger.

Figure 6-40 Importing configuration

IL03J00028

Step 2 Click **Add Devices** and set access parameters.

 Copyright © Huawei Technologies Co., Ltd.

Figure 6-41 Setting access parameters

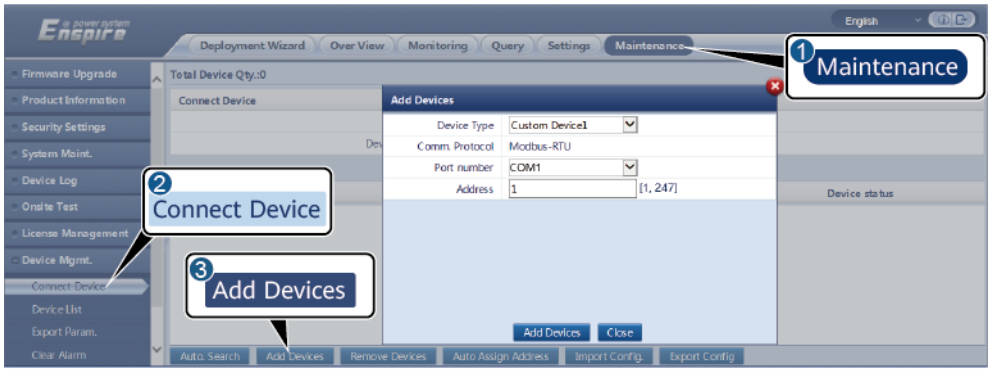

IL03J00031

Parameter	Setting
Device Type	Currently, **Custom Device1** to **Custom Device10** are supported. Set this parameter based on the configuration import file. For example, if you import **modbus_equip_custom_1.cfg**, select **Custom Device1**.
Port number	Set this parameter to the number of the COM port connected to the custom device.
Address	Set this parameter to the communications address of the custom device.

Step 3 Set monitoring parameters and click **Submit**.

Figure 6-42 Monitoring

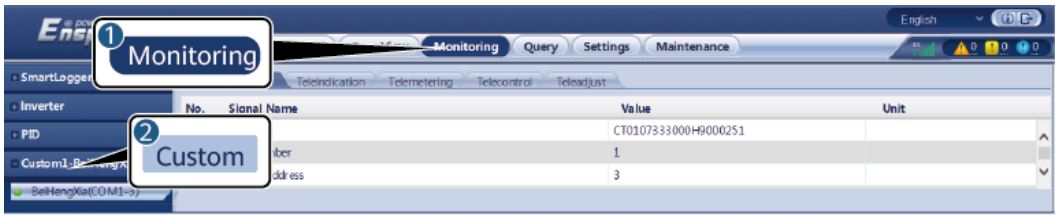

IL03J00032

Tab	Function	Setting
Running Info.	Displays the running information about the custom device.	-
Teleindication	Displays the device status, such as the switch status.	-

Copyright © Huawei Technologies Co., Ltd.

Tab	Function	Setting
Telemetering	Displays the real-time analog data of the device, such as the voltage.	-
Telecontrol	Allows users to set status control parameters, such as the parameter for controlling switch-on or switch-off.	Set this parameter as required.
Teleadjust	Allows users to set analog parameters, such as voltage protection parameters.	Set this parameter as required.

----End

6.3.20 Smart Tracking Algorithm

Context

- Before using the smart tracking algorithm, check whether the plant meets the requirements for using this function based on the onsite smart tracking algorithm delivery checklist, and check whether the Modbus protocol versions between the plant networking devices are compatible.
- When the SmartLogger is connected to a third-party PV module support, it implements only smart tracking and does not support maintenance for the third-party PV module support.
- The smart tracking algorithm can be configured only after a license is purchased and loaded.
- For details about how to load a license, see **7.4.6 License Management**.

Procedure

After the trackers are commissioned during onsite delivery, their parameters can be intelligently controlled by the smart tracking algorithm.

1. Choose **Settings** > **Smart Tracking Algorithm**, set **Tracker working mode** to **Automatic** and **Smart tracking algorithm** to **Enable**. Then, the smart tracking algorithm automatically adjusts tracker parameters such as the angle based on sunlight to maximize energy yield.

Figure 6-43 Smart tracking algorithm (SDS) parameters

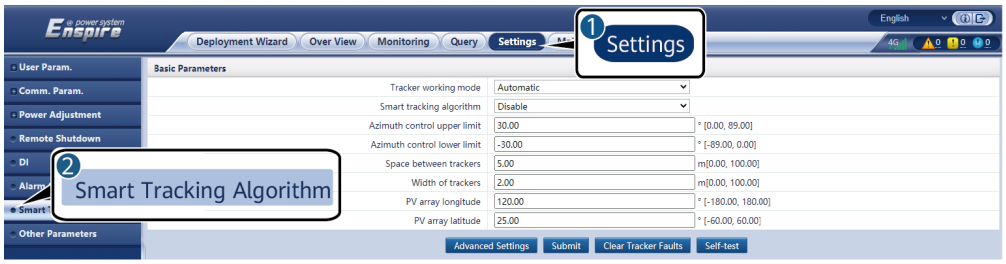

 Copyright © Huawei Technologies Co., Ltd.

6.3.21 Setting IMD Parameters

Context

The SmartLogger connects to an IMD over RS485. This function applies only to the C&I scenario and is supported in SmartLogger V300R023C00SPC172 and later versions.

NOTICE

Ensure that cables are correctly and securely connected to the IMD according to the IMD user manual. If cables are incorrectly connected or in poor contact, the IMD cannot work properly and the insulation resistance detection function fails.

Procedure

1. Choose **Maintenance** > **Device Mgmt.** > **Connect Device** > **Add Devices** to set access parameters.

Parameter	Description
Device Type	Set this parameter to **IMD**.
Port number	The IMD uses RS485 for communication. Set the COM port connected to the IMD based on site requirements.
Address	Set the IMD communications address based on site requirements.
Model of equipment	Set this parameter based on the actual model.

2. View IMD running information.

Figure 6-44 IMD running information

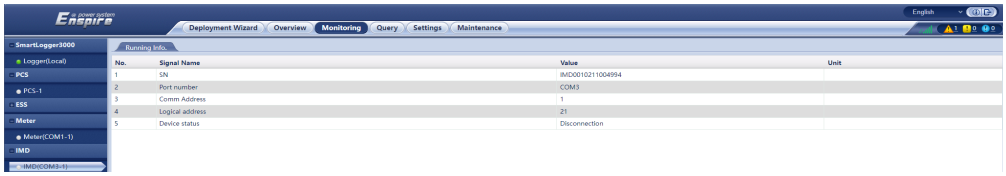

6.3.22 Setting Relay Parameters

Context

A relay protection device is an important test tool to ensure the safe and reliable operation of the system. A relay protection device must be configured in the **On-grid/Off-grid (VSG)** scenario when microgrid control is implemented by the SmartLogger.

Procedure

1. Add the device.
   - Method 1: Choose **Maintenance** > **Device Mgmt.** > **Connect Device**. The **Connect Device** page is displayed. Click **Add Devices** and set related parameters.

   - Method 2: Select **Yes** in the **Do you want to connect the relay protection device?** dialog box under **Microgrid** in **Deployment Wizard**. Set relay protection device parameters.

Table 6-19 Relay protection device parameters

Parameter	Description
Port	Set the COM port connected to **Relay protection device** based on the actual cable connections.
Baud rate	Set the baud rate, parity, stop bit, and address of **Relay protection device** to be consistent with the communications parameters of the relay protection device.
Parity	
Stop Bit	
Address	
Device Type	Set this parameter to **Relay protection device**.
Device model	Set this parameter to **Easergy P3U30**.

2. Choose **Monitoring** > **RELAY** > **Telecontrol**, set telecontrol parameters for the relay protection device, and click **Submit**.

Copyright © Huawei Technologies Co., Ltd.

Parameter	Description
PCC Breaker Off Preset	Turns off the on/off-grid switch. To turn off the switch, enable **PCC Breaker Control Execute**.
PCC Breaker On Preset	Turns on the on/off-grid switch. To turn on the switch, enable **PCC Breaker Control Execute**.
PCC Breaker Control Execute	0: Disables the function of turning on or off the on/off-grid switch remotely by the relay protection device. 1: Enables the function of turning on or off the on/off-grid switch remotely by the relay protection device.

6.3.23 Setting Echonet

Context

Echonet is an IoT protocol applicable to Japan. This function applies only to residential scenarios in Japan.

Procedure

1. Choose **Settings** > **Comm. Param.** > **Echonet**. The Echonet page is displayed.
2. Set **Link setting** to **Enable**.

NOTICE

Enabling this function poses security risks. Exercise caution with this operation.

6.4 Setting Battery Control Parameters

This section does not apply to V300R001C00SPC602 and earlier versions.

Battery Settings

- Choose **Settings** > **Battery Settings** to set the working mode.

Table 6-20 Battery control working modes

Working Mode	Mode Description
No control	This mode is used only for commissioning. The SmartLogger does not control the power dispatch of the ESS.

 Copyright © Huawei Technologies Co., Ltd.

Working Mode	Mode Description
Maximum self-consumption	• This mode applies to areas where the electricity price is high, or areas where the FIT subsidy is low or unavailable. The PV +ESS system generates sufficient PV power for loads and uses the surplus PV power to charge the ESS (if the PV power is insufficient for loads, the TOU mode is recommended). • PV power is preferentially supplied to loads, and the surplus power is used to charge the ESS. If the ESS is fully charged or is being charged at full power, the surplus power is fed to the grid. When PV power is insufficient or no PV power can be generated at night, the ESS discharges power to loads. This improves the self-consumption rate and energy self-sufficiency rate, and reduces electricity costs. The grid cannot charge the ESS but can supply power to loads. • The SmartLogger performs ESS scheduling based on the external scheduling power limit and the preceding policies.
Fully fed to grid	• This mode applies only to distributed ESS (residential) scenarios. • This mode maximizes the PV energy fed to the grid. When the PV output power in the daytime is greater than the maximum output capacity of the inverter, the surplus PV power is used to charge the ESS. When the PV output power is less than the maximum output capacity of the inverter, the ESS discharges energy to the inverter to maximize the energy fed from the inverter to the grid. The grid cannot charge the ESS. • The SmartLogger directly delivers the external scheduling power limit. **NOTE** **Fully fed to grid** is displayed only in distributed energy storage scenarios.

 Copyright © Huawei Technologies Co., Ltd.

Working Mode	Mode Description
TOU	• It is applicable to the PV+ESS system and ESS-only system where peak to valley electricity prices are different and power meters are available. • You can manually set the charge and discharge time segments. For example, if you set the low electricity price period at night as the charge time, the system charges the batteries at the maximum power during the charge time. If you set the high electricity price period as the discharge time, batteries can discharge only during the discharge time based on the actual load power, reducing electricity costs. • Click **Add** to set the charge and discharge time segments. A maximum of 14 time segments can be set. During the charge time, the grid can charge the batteries. During the discharge time, the batteries can supply power to the loads. In other time segments, the batteries do not discharge. The PV system and grid supply power to loads, and the PV system can charge the batteries. • In some countries, the grid is not allowed to charge batteries. In such case, this mode cannot be used. • The SmartLogger performs ESS scheduling based on the external scheduling power limit and the preceding policies.
TOU (fixed power)[1]	• This mode applies to the ESS-only system where electricity prices at peak and off-peak hours are different and power meters are unavailable. • You can manually set the charge and discharge time segments. For example, if you set the low electricity price period at night as the charge time, the system charges the batteries at the fixed power during the charge time. If you set the high electricity price period as the discharge time, batteries can discharge only during the discharge time at the fixed power, reducing electricity costs. • Click **Add** to set the charge and discharge time segments. A maximum of 14 time segments can be set. During the charge time, the grid can charge the batteries. During the discharge time, the batteries can supply power to the loads. In other time segments, the batteries do not discharge and are not charged. • In some countries, the grid is not allowed to charge batteries. In such case, this mode cannot be used. • The SmartLogger performs ESS scheduling based on the external scheduling power limit and the preceding policies. • Limited feed-in and TOU fixed power control cannot be used at the same time.

 Copyright © Huawei Technologies Co., Ltd.

Working Mode	Mode Description
Charge/Discharge based on grid dispatch	• This mode applies to scenarios where the northbound controller delivers active power scheduling commands. To use this function, set **Active power control mode** to **Remote communication scheduling**. • The purpose of scheduled discharge is to meet the active power scheduling target value at the grid access point. PV energy is preferred. If the generated PV energy is insufficient, the batteries discharge and the energy is fed to the grid based on the active power scheduling target value. If the generated PV energy is sufficient, the energy is fed to the grid based on the active power scheduling target value, and the surplus PV energy is used to charge the batteries. • The purpose of scheduled charge is to meet the active power scheduling target value at the grid access point. If the battery charge power is insufficient or the Smart PCS limits the power, the grid charges the batteries with the maximum capability. If the batteries are not fully charged when the scheduling target value is met, the PV power is used to charge the batteries.
Custom[2]	• This mode applies to utility-scale plant (with ESSs) scheduling scenarios. Customers can control the battery discharge power. • Non-discharge period: The batteries cannot discharge and can be charged based on the scheduling command. • Discharge period: If **Adaptive discharge power** is enabled, the control logic is the same as that for scheduled charge and discharge. The battery charge and discharge power is determined by the upper-layer scheduling command. If **Adaptive discharge power** is disabled, the battery discharge power is fixed to the reference value set by the customer. In this case, the upper-layer scheduling command controls only the PV inverters but not the batteries.
Note [1]: You can set this parameter in SmartLogger V300R023C00SPC150 and later versions. Note [2]: You can set this parameter in SmartLogger V300R023C00SPC120 and later versions.	

Table 6-21 Running parameters in each battery control working mode

Working Mode	Parameter	Description
Maximum self-consumption	**Active power threshold of grid during battery discharge**	Set the grid power threshold at the grid connection point for loads when the load power is greater than the PV power.

Working Mode	Parameter	Description
	Adjustment deadband	Set the precision of the grid power at the grid connection point. This parameter affects the power value range at the grid connection point. If the actual grid power threshold at the grid connection point is within this range, i.e. [Active power threshold of grid during battery discharge – Adjustment deadband, Maximum grid power during battery discharge + Adjustment deadband], the grid power requirement at the grid connection point is met.
TOU	**Preferred use of surplus PV power**	• **Charge**: When the PV power is greater than the load power, the surplus PV energy is used to charge the batteries. After the maximum charge power is reached or the batteries are fully charged, the surplus PV energy is fed to the grid. • **Fed to grid**: When the PV power is greater than the load power, the surplus PV energy is preferentially fed to the grid. When the maximum output power of the device is reached, the surplus energy is used to charge the batteries. This setting is applicable to the scenario where the FIT is higher than the electricity price. The grid cannot charge the batteries.
	Maximum power for charging batteries from grid	Set the maximum power at which the grid charges the ESS.
	Active power threshold of grid during battery discharge	Set the grid power threshold at the grid connection point for loads when the load power is greater than the PV power.
	Adjustment deadband	Set the precision of the grid power at the grid connection point. This parameter affects the power value range at the grid connection point. If the actual grid power threshold at the grid connection point is within this range, i.e. [Active power threshold of grid during battery discharge – Adjustment deadband, Maximum grid power during battery discharge + Adjustment deadband], the grid power requirement at the grid connection point is met.
	Start time	Set the start time and end time of charge and discharge. A maximum of 14 time segments can be set. You can set a cycle by week by clicking the buttons corresponding to **Mon.** through **Sun.** in the **Repeat** box. The buttons are blue by default, indicating being selected. After you click it, the button turns gray.
	End time	
	Charge/Discharge	
	Repeat	

 Copyright © Huawei Technologies Co., Ltd.

Working Mode	Parameter	Description
TOU (fixed power)	**Start time**	Set the start time, end time, and power of charge and discharge. A maximum of 14 time segments can be set. You can set a cycle by week by clicking the buttons corresponding to **Mon.** through **Sun.** in the **Repeat** box. The buttons are blue by default, indicating being selected. After you click it, the button turns gray.
	End time	
	Charge/Discharge	
	Charge/Discharge power (kW)	
	Repeat	
Charge/ Discharge based on grid dispatch	**Array end-of-charge/discharge SOC derating**	The default value is **Disable**. The default value is recommended. Set this parameter as required. After this parameter is enabled, the SmartLogger will be derated according to a certain slope to prevent sudden power changes of arrays at the cut-off SOC point.
	Control charge/ discharge time window	The default value is **Disable**. The default value is recommended. Set this parameter as required. You can set the time segment for charge forbidden, discharge forbidden, charge, and discharge only after the control charge/discharge time window is enabled. This function applies only to PV+ESS collaborative control. ● PV+ESS array: In PV+ESS collaborative control, the target value configured for the ESS charge/discharge time window takes precedence over the scheduling command. ● PV+ESS array: In PV+ESS independent control, the scheduling command takes precedence over the target value configured for the ESS charge and discharge time window. ● ESS-only array: The scheduling instruction takes precedence over the target value configured for the ESS charge and discharge time window.
	Start time	This parameter is displayed when **Control charge/ discharge time window** is set to **Enable**. Set the start time, end time, and power of charge forbidden, discharge forbidden, charge, and discharge. A maximum of 14 time segments can be set. You can set a cycle by week by clicking the buttons corresponding to **Mon.** through **Sun.** in the **Repeat** box. The buttons are blue by default, indicating being selected. After you click it, the button turns gray.
	End time	
	Charge/Discharge	
	Charge/Discharge power (kW)	
	Repeat	
Custom	**ESS discharge start time**	Set the start time of battery discharge. During the period from the start time to the end time, the batteries can be charged and can discharge. Beyond the period, the batteries cannot discharge and can only be charged.

 Copyright © Huawei Technologies Co., Ltd.

Working Mode	Parameter	Description
	ESS discharge end time	Set the end time of battery discharge. During the period from the start time to the end time, the batteries can be charged and can discharge. Beyond the period, the batteries cannot discharge and can only be charged.
	Adaptive discharge power	• **Enable**: PV power supply is preferred. If the PV power is insufficient, the batteries supply power to loads; if the PV power is sufficient, the system outputs at the target value and the surplus PV power is used to charge the batteries. • **Disable**: Batteries discharge based on the discharge power set on the GUI.
	Reference discharge power	Set the battery discharge power during the discharge period.

- Choose **Settings > Battery Settings** to set power allocation. You can set this parameter in SmartLogger V300R023C10SPC550 and later versions.

Parameter	Description
Difference threshold for starting array SOC rapid equilibrium	The default value is **5%**. The default value is recommended. Set this parameter as required. When the SOC difference between racks in the array is greater than the value of **Difference threshold for starting array SOC rapid equilibrium**, the rapid equilibrium algorithm is enabled.

- Choose **Settings > Battery Settings** to set dispatch control. The scheduling mode applies only to the C&I scenario and is displayed when the C&I ESS is connected. You can set this parameter in SmartLogger V300R023C10SPC550 and later versions.

Parameter	Description
Scheduling Mode	The default value is **Maximize energy**. • **Maximize energy**. If ESSs with different rates are used together in C&I scenarios, the power is allocated based on the minimum rate. • **Maximize power**. If ESSs with different rates are used together in C&I scenarios, the power is allocated based on the maximum power.

- Choose **Settings** > **Battery Settings** to set automatic calibration for battery control.

 Copyright © Huawei Technologies Co., Ltd.

Parameter	Description
Automatic SOC calibration	● If this parameter is set to **Enable**, automatic charge and discharge calibration is allowed for battery racks or battery cabinets. The ESS periodically calibrates the SOC rack by rack or cabinet by cabinet. During the calibration, the end-of-charge SOC and end-of-discharge SOC settings will be overridden so that the ESS can be fully charged or discharged. ● If this parameter is set to **Disable**, automatic charge and discharge calibration is not allowed for battery racks or battery cabinets. **NOTE** ● This function will cause SOC inconsistency between battery racks or cabinets, which is normal. ● Before using this function, contact technical support engineers to evaluate the impact of SOC inconsistency between battery racks or cabinets during automatic calibration on the use of the system.
Automatic SOC calibration interval[1]	Set the automatic SOC calibration interval. This parameter is displayed when **Automatic SOC calibration** is set to **Enable**. If the battery SOC stays in the range of 10% to 90% most of the time, for example, in the microgrid scenario, the recommended online calibration interval is less than or equal to 30 days. If the battery SOC stays in the range of 40% to 60% most of the time, for example, in the frequency regulation scenario, the recommended online calibration interval is less than or equal to 180 days. If the battery SOC stays below 10% or at 100% most of the time, for example, in the peak shaving scenario, the recommended online calibration interval is less than or equal to 180 days.

 Copyright © Huawei Technologies Co., Ltd.

Parameter	Description
Automatic SOH calibration	• If this parameter is set to **Enable**, the ESS periodically calibrates the SOH rack by rack or cabinet by cabinet. During the calibration, the end-of-charge SOC and end-of-discharge SOC settings will be overridden so that the ESS can be fully charged and discharged. Then, the battery capacity will be calculated. The charge and discharge response will be affected during the calibration. Suggestion: During SOH calibration, after the system is fully charged, maintain the charge command for 30 to 60 minutes. After the discharge is complete, maintain the discharge command for 30 to 60 minutes. • If this parameter is set to **Disable**, automatic SOH calibration is not allowed for battery racks or battery cabinets. **NOTE** • This function will cause SOC inconsistency between battery racks or cabinets, which is normal. • Before using this function, contact technical support engineers to evaluate the impact of SOC inconsistency between battery racks or cabinets during automatic calibration on the use of the system.
Note [1]: You can set this parameter in SmartLogger V300R023C00SPC172 and later versions.	

- Choose **Settings** > **Battery Settings** to set the array end-of-charge SOC and array end-of-discharge SOC. You can set these parameters in SmartLogger V300R023C10SPC500 and later versions.

Parameter	Description
Array end-of-charge SOC	The default value is 100%. The default value is recommended. Set this parameter as required.
Upper limit of SOC for array charge	The default value is 100%. The default value is recommended. Set this parameter as required.
SOC for array charge limit	The default value is 95%. The default value is recommended. Set this parameter as required.
SOC for array discharge limit	The default value is 10%. The default value is recommended. Set this parameter as required.
Lower limit of SOC for array discharge	The default value is 5%. The default value is recommended. Set this parameter as required.
Array end-of-discharge SOC	The default value is 5%. The default value is recommended. Set this parameter as required.

 Copyright © Huawei Technologies Co., Ltd.

NOTE

- When submitting the parameters, ensure that: **Array end-of-charge SOC** ≥ **Upper limit of SOC for array charge** ≥ **SOC for array charge limit** and **Array end-of-discharge SOC** ≤ **Lower limit of SOC for array discharge** ≤ **SOC for array discharge limit**
- **Upper limit of SOC for array charge**, **SOC for array charge limit**, **SOC for array discharge limit**, and **Lower limit of SOC for array discharge** are displayed only in utility-scale scenarios.

Capacity Control

- In SmartLogger V300R023C10SPC550 and later versions, this function is displayed and can be set only when the feed-in meter is connected in ESS scenarios. Choose **Settings** > **Battery Settings** > **Capacity Control** and set related parameters.
- **Peak shaving** limits the maximum peak power at the grid connection point. In some areas, electricity fees depend on both volumetric charge and demand charge. The **Peak shaving** function allows you to lower the peak demand purchased from the grid during peak hours, reducing electricity fees. **Peak shaving** applies to areas where demand charges are collected. The peak shaving function allows you to lower the peak power purchased from the grid in **Maximum self-consumption** or **TOU** mode during peak hours, reducing electricity fees.
- **Power boost limit** is designed to limit the maximum peak current at the grid connection point. By doing so, it ensures that the electric current purchased from or sold to the grid does not exceed the maximum peak current at the grid connection point. This control is essential because if the electric current exceeds the maximum peak current, it may trigger the system's overcurrent protection mechanism, potentially causing the transformer to trip.

NOTICE

- The **Power boost limit** and **Peak shaving** functions are ineffective during the update of the SmartLogger and ESS.
- If the capacity or demand at the grid connection point exceeds the threshold, it takes 5s for the SmartLogger to control the capacity or demand within the threshold. Ensure that the switch protection settings are appropriate.

Table 6-22 Capacity control parameters

Parameter	Description
Peak shaving	• **No control**: The peak shaving function is disabled. • **Active power limit**: The active power purchased from the grid cannot exceed the preset capacity limit. • **Apparent power limit**: The apparent power purchased from the grid cannot exceed the preset capacity limit.

 Copyright © Huawei Technologies Co., Ltd.

Parameter	Description
Power boost limit	• **No control**: The power boost limit function is disabled. • **Current Limit**: The current of electricity purchased from or sold to the grid cannot exceed the preset current limit.
Maximum Peak Current	This parameter is displayed when **Power boost limit** is set to **Current Limit**. Specifies the maximum peak current at the grid connection point. The default value is 30000 A. Set this parameter based on the maximum peak current for power purchase or sales at the grid connection point.
Backup power SOC for capacity control	Specifies the battery SOC reserved for capacity control. The value of this parameter affects the peak shaving capability. A larger value indicates stronger peak shaving capability.
PV power limit when power meter fails	Specifies the active power limit of the inverter when the feed-in meter communication is abnormal. You can manually change the active power percentage of the inverter as required.
PCS power limit when power meter fails	Specifies the active power limit of the PCS when the feed-in meter communication is abnormal. You can manually change the active power percentage of the PCS as required.
Start time	• Set **Maximum peak power** based on the start time and end time. The peak power is configured based on electricity prices in different time segments. You are advised to set the peak power to a low value when the electricity price is high. • A maximum of 14 time segments can be set.
End time	
Maximum peak power	

Peak Shaving

Peak Shaving is displayed and can be set only when the feed-in meter is connected in energy storage scenarios and the version is between SmartLogger V300R023C00SPC160 and SmartLogger V300R023C10SPC550.

In some areas, electricity fees depend on both volumetric charge and demand charge. The **Peak shaving** function allows you to lower the peak demand purchased from the grid during peak hours, reducing electricity fees. In distributed scenarios, the **Peak Shaving** must be used in maximum self-consumption or TOU mode.

Choose **Settings** > **Battery Settings** and set **Peak Shaving**.

Figure 6-45 Setting peak shaving

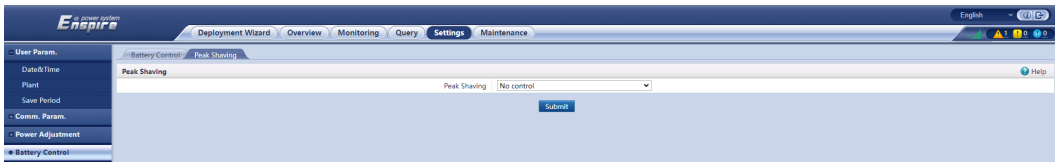

Copyright © Huawei Technologies Co., Ltd.

Parameter	Description	Remarks
Peak Shaving	• No control: The peak shaving function is disabled. • Active power limit: The active power purchased from the grid cannot exceed the preset capacity limit. • Apparent power limit: The apparent power purchased from the grid cannot exceed the preset capacity limit.	If **Peak Shaving** is set to **No control**, other parameters are not displayed.
Backup power SOC for peak shaving	ESS backup power SOC for peak shaving. The value of this parameter affects the peak shaving capability. A larger value indicates stronger peak shaving capability.	
PV power limit when power meter fails	Set the active power limit of the inverter when the feed-in meter communication is abnormal. You can manually change the active power percentage of the inverter as required.	
PCS power limit when power meter fails	Specifies the active power limit of the PCS when the feed-in meter communication is abnormal. You can manually change the active power percentage of the PCS as required.	
Start time	• Set the peak power range based on the start time and end time. The peak power is configured based on electricity prices in different time segments. You are advised to set the peak power to a low value when the electricity price is high. • A maximum of 14 time segments can be set.	
End time		
Maximum Power		

Capacity Limit

In versions earlier than SmartLogger V300R023C00SPC160, **Capacity Limit** is displayed in the energy storage scenario. Choose **Settings** > **Battery Settings** and set the capacity limit.

Figure 6-46 Setting the capacity limit

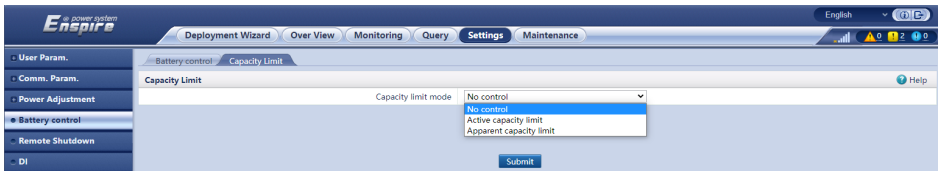

Copyright © Huawei Technologies Co., Ltd.

Parameter	Description	Remarks
Capacity Limit	• No control: The capacity of the grid-connection point is not limited. The inverter and Smart PCS run according to the preset control policy. • Active capacity limit: The active power of the grid-connection point for purchasing or feeding power cannot exceed the preset capacity limit. • Apparent capacity limit: The apparent power of the grid-connection point for purchasing or feeding power cannot exceed the preset capacity limit.	If **Capacity Limit** is set to **No control**, other parameters are not displayed.
Maximum active capacity	Set this parameter according to the charging capacity in the demand contract of the grid company. Once set, the active power of the grid-connection point for purchasing or feeding power cannot exceed the preset value.	This parameter is displayed only when **Capacity Limit** is set to **Active capacity limit**.
Maximum apparent capacity	Set this parameter according to the charging capacity in the demand contract of the grid company. Once set, the apparent power of the grid-connection point for purchasing or feeding power cannot exceed the preset value.	This parameter is displayed only when **Capacity Limit** is set to **Apparent capacity limit**.
PV power limit when power meter fails	Set the active power limit of the inverter when the feed-in meter communication is abnormal. You can manually change the active power percentage of the inverter as required.	-
PCS power limit when power meter fails	Specifies the active power limit of the PCS when the feed-in meter communication is abnormal. You can manually change the active power percentage of the PCS as required.	-

NOTE

- If the capacity limit is met 24 hours a day, the ratio of the ESS and Smart PCS power to the load power must be properly set to ensure that the ESS and Smart PCS have sufficient capacity to meet the capacity limit.
- When the ESS is used only for capacity limit, you can set the charge window to 24 hours by setting **TOU** without setting the discharge window or non-charge/discharge window.
- When the capacity limit is enabled in **TOU** mode, the charge/discharge time set in the **TOU** window must cover 24 hours a day. Capacity limit is not supported in non-charge/discharge time.
- The overload capability of transformers, power distribution switches, and cables must be greater than the sum of the maximum charge current and maximum load current of the ESS.

 Copyright © Huawei Technologies Co., Ltd.

Battery Parameters

NOTE

This tab page is displayed only in SmartLogger V300R023C10 and SmartLogger V300R024C00.

If the PCS is powered off, you are advised to preset PCS running parameters on this tab page.

Choose **Settings** > **Battery Settings** > **Battery parameters** to set PCS parameters in batches.

After **Array parameter synchronization** is set to **Enable**, if **Auto switching between working modes**, **Working mode switching delay**, **Working mode**, and VSG parameters are set and submitted, the corresponding parameters under **Monitoring** > **PCS** > **Running Param.** are read-only.

Parameter	Description	Remarks
Array parameter synchronization	The default value is **Disable**. Disable: The function of array parameter synchronization is disabled. Parameters related to the array are not displayed. Enable: The function of array parameter synchronization is enabled. If the parameter values of the PCS are different from those configured on this page, the parameter values configured on this page will be synchronized for the PCS.	Other battery parameters are displayed only when **Array parameter synchronization** is set to **Enable**.
Auto switching between working modes	This parameter is applicable only in on-grid or on/off-grid mode. ● **Disable**: On/Off-grid switching cannot be performed automatically. ● **Enable**: On/Off-grid switching can be performed automatically and the PCS does not need to be shut down before the switching.	-
Working mode switching delay	The default value is **60**. Time for other instructions to take effect during PCS working mode switching The value range is [10, 300] (unit: s).	-
Working mode	The default value is **PQ**. ● PQ: In the on-grid scenario, set this parameter to **PQ**. ● VSG: In the off-grid scenario, set this parameter to **VSG**.	-

 Copyright © Huawei Technologies Co., Ltd.

Parameter	Description	Remarks
Per unit armature resistance	The default value is **2**. Specifies the resistance per unit value for armature windings of the virtual synchronous generator. The value of this parameter ranges from 0.0% to 5.0%.	• This parameter is displayed when **Working mode** is set to **VSG**. • This parameter must be set by professional personnel. Improper settings may cause device exceptions.
Per unit armature inductive reactance	The default value is **1**. Specifies the inductive reactance per unit value for armature windings of the virtual synchronous generator. The value of this parameter ranges from 0.0% to 5.0%.	
VSG inertia time constant	The default value is **1**. Specifies the time required for the virtual rotor of the virtual synchronous generator to reach the rated speed from the static state under the rated torque. The value of this parameter ranges from 0.0s to 20.0s.	
P-F adjustment coefficient	The default value is **1**. Specifies the frequency deviation corresponding to the rated active power of the virtual synchronous generator. The value of this parameter ranges from 0.5% to 5.0%.	
Q-V adjustment coefficient	The default value is **3**. Specifies the voltage deviation corresponding to the rated reactive power of the virtual synchronous generator. The value of this parameter ranges from 0.3% to 10.0%.	
P-V adjustment coefficient	The default value is **0**. Specifies the voltage deviation corresponding to the rated active power of the virtual synchronous generator. The value of this parameter ranges from 0% to 10.0%.	
Q-F adjustment coefficient	The default value is **0**. Specifies the frequency deviation corresponding to the rated reactive power of the virtual synchronous generator. The value of this parameter ranges from 0.5% to 5.0%.	
VSG output voltage correction coefficient	The default value is **100**. Corrects the deviation caused by the transformer ratio error. The value of this parameter ranges from 90.0% to 110.0%.	
VSG output frequency correction coefficient	The default value is **100**. Corrects the PCS output frequency deviation. The value of this parameter ranges from 90.0% to 110.0%.	
VSG frequency damping coefficient	The default value is **7.2**. Specifies the power factor that prevents the frequency change of the virtual synchronous generator. The value of this parameter ranges from 1.0% to 10.0%.	
VSG excitation time constant	The default value is **0**. Specifies the time required for the excitation of the virtual synchronous generator to reach the rated voltage. The value of this parameter ranges from 0s to 100s.	

 Copyright © Huawei Technologies Co., Ltd.

Parameter	Description	Remarks
VSG excitation damping coefficient	The default value is **0**. Specifies the power factor that prevents the voltage change of the virtual synchronous generator. The value of this parameter ranges from 0% to 20000%.	
Active power (%)	The default value is **100**. Adjusts the active output power of the device by percentage. The value of this parameter ranges from –100.0% to 100.0%.	This parameter is delivered once before the PCS is started. The configuration can be modified by choosing **Monitoring** > **PCS** > **Running Param.**
Reactive power compensation (Q/S)	The default value is **0**. Specifies the reactive power of the device. The value of this parameter ranges from –100.0% to 100.0%.	

6.5 Setting EMS Control Parameters

This section does not apply to V300R001C00SPC603 and later versions.

Procedure

To set the battery working mode, choose **Settings** > **EMS Control**.

Figure 6-47 Working mode

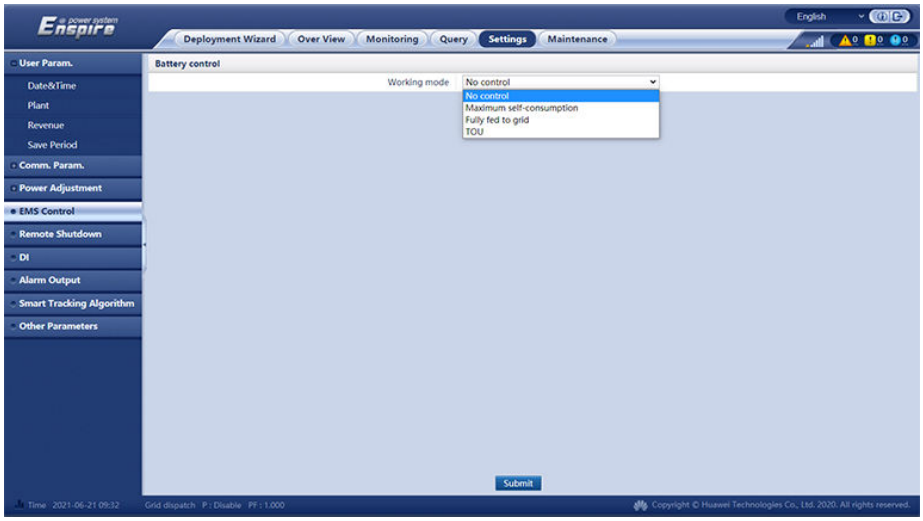

Table 6-23 Battery control working modes

Working Mode	Mode Description
No control	This mode is used only for commissioning. The SmartLogger does not control the power dispatch of the ESS.

Working Mode	Mode Description
Maximum self-consumption	● This mode applies to areas where the electricity price is high, or areas where the FIT subsidy is low or unavailable. The PV+ESS system generates sufficient PV power for loads and uses the surplus PV power to charge the ESS (if the PV power is insufficient for loads, the TOU mode is recommended). ● PV power is preferentially supplied to loads, and the surplus power is used to charge the ESS. If the ESS is fully charged or is being charged at full power, the surplus power is fed to the grid. When PV power is insufficient or no PV power can be generated at night, the ESS discharges power to loads. This improves the self-consumption rate and energy self-sufficiency rate, and reduces electricity costs. The grid cannot charge the ESS but can supply power to loads. ● The SmartLogger performs ESS scheduling based on the external scheduling power limit and the preceding policies.
Fully fed to grid	● This mode applies only to distributed ESS (residential) scenarios. ● This mode maximizes the PV energy fed to the grid. When the PV output power in the daytime is greater than the maximum output capacity of the inverter, the surplus PV power is used to charge the ESS. When the PV output power is less than the maximum output capacity of the inverter, the ESS discharges energy to the inverter to maximize the energy fed from the inverter to the grid. The grid cannot charge the ESS. ● The SmartLogger directly delivers the external scheduling power limit.
TOU	● It is applicable to the PV+ESS system and ESS-only system where peak to valley electricity prices are different and power meters are available. ● You can manually set the charge and discharge time segments. For example, if you set the low electricity price period at night as the charge time, the system charges the batteries at the maximum power during the charge time. If you set the high electricity price period as the discharge time, batteries can discharge only during the discharge time based on the actual load power, reducing electricity costs. ● Click **Add** to set the charge and discharge time segments. A maximum of 14 time segments can be set. During the charge time, the grid can charge the batteries. During the discharge time, the batteries can supply power to the loads. In other time segments, the batteries do not discharge. The PV system and grid supply power to loads, and the PV system can charge the batteries. ● In some countries, the grid is not allowed to charge batteries. In such case, this mode cannot be used. ● The SmartLogger performs ESS scheduling based on the external scheduling power limit and the preceding policies.

 Copyright © Huawei Technologies Co., Ltd.

Table 6-24 Running parameters in each battery control working mode

Working Mode	Parameter	Description
Maximum self-consumption	**Tracking load**	• **Enable**: The device output changes with the load so that the output is approximately equal to the load. • **Disable**: The device outputs power as much as possible. However, the output power is still affected by parameters such as external scheduling.
	Battery backflow protection	• **Enable**: If the battery feeds power to the grid while discharging, the system sends a standby command to the battery to eliminate the reverse power. When the battery needs to discharge power, the system sends a running command to the battery. • **Disable**: If reverse battery power is detected at the grid-connection point, the reverse power is eliminated by reducing the battery output power. The battery standby command is not delivered.
	Active power threshold of grid during battery discharge	Set the grid power threshold at the grid connection point for loads when the load power is greater than the PV power.
	Adjustment deadband	Set the precision of the grid power at the grid connection point. This parameter affects the power value range at the grid connection point. If the actual grid power threshold at the grid connection point is within this range, i.e. [Active power threshold of grid during battery discharge – Adjustment deadband, Maximum grid power during battery discharge + Adjustment deadband], the grid power requirement at the grid connection point is met.
TOU	**Tracking load**	• **Enable**: The device output changes with the load so that the output is approximately equal to the load. • **Disable**: The device outputs power as much as possible. However, the output power is still affected by parameters such as external scheduling.
	Battery backflow protection	• **Enable**: If the battery feeds power to the grid while discharging, the system sends a standby command to the battery to eliminate the reverse power. When the battery needs to discharge power, the system sends a running command to the battery. • **Disable**: If reverse battery power is detected at the grid-connection point, the reverse power is eliminated by reducing the battery output power. The battery standby command is not delivered.

 Copyright © Huawei Technologies Co., Ltd.

Working Mode	Parameter	Description
	Preferred use of surplus PV power	• **Charge**: When the PV power is greater than the load power, the surplus PV energy is used to charge the batteries. After the maximum charge power is reached or the batteries are fully charged, the surplus PV energy is fed to the grid. • **Fed to grid**: When the PV power is greater than the load power, the surplus PV energy is preferentially fed to the grid. When the maximum output power of the device is reached, the surplus energy is used to charge the batteries. This setting is applicable to the scenario where the FIT is higher than the electricity price. The grid cannot charge the batteries.
	Maximum power for charging batteries from grid	Set the maximum power at which the grid charges the ESS.
	Active power threshold of grid during battery discharge	Set the grid power threshold at the grid connection point for loads when the load power is greater than the PV power.
	Adjustment deadband	Set the precision of the grid power at the grid connection point. This parameter affects the power value range at the grid connection point. If the actual grid power threshold at the grid connection point is within this range, i.e. [Active power threshold of grid during battery discharge – Adjustment deadband, Maximum grid power during battery discharge + Adjustment deadband], the grid power requirement at the grid connection point is met.
	Start time	Set the start time and end time of charge and discharge. A maximum of 14 time segments can be set. You can set a cycle by week by clicking the buttons corresponding to **Mon.** through **Sun.** in the **Repeat** box. The buttons are blue by default, indicating being selected. After you click it, the button turns gray.
	End time	
	Charge/Discharge	
	Repeat	

6.6 Setting Microgrid Control Parameters

- Microgrid control is displayed only when the C&I ESS is connected.
- To modify microgrid control parameters, contact professional plant operation and management personnel or the Company's engineers.

 Copyright © Huawei Technologies Co., Ltd.

6.6.1 On-grid/Off-grid (PQ/VSG)

Step 1 Choose **Settings** > **Microgrid Control** > **General Configuration** and set general configuration parameters.

Parameter	Description
MGCC Mode under **Microgrid**	This parameter is displayed as **Enable**. You can change the setting only through the deployment wizard.
Microgrid scenario under **Microgrid**	This parameter is displayed as **On-grid/Off-grid (PQ/VSG)**. You can change the setting only through the deployment wizard.
Switch status port under **On/Off-grid switch**	Set these parameters based on the actual cable connections. **DI port status** can be set to **Open** or **Close**. If the actual status of the on/off-grid switch is inconsistent with the displayed status, change the setting of **DI port status**.
DI port status under **On/Off-grid switch**	
Switch-off control port under **On/Off-grid switch**	Set the DO port for turning off the on/off-grid switch.
Switch-on control port under **On/Off-grid switch**	Set the DO port for turning on the on/off-grid switch.
DI port under **Grid Failure Detection**	Set the DI port to which the grid failure detection device is connected and the DI port status.
DI port status under **Grid Failure Detection**	

Step 2 Choose **Settings** > **Microgrid Control** > **Dispatch Control** to set dispatch control parameters.

Table 6-25 Dispatch control parameters

Tab	Parameter	Description
Control Policy	Automatic black start after irradiance restoration	Specifies whether to enable automatic black start after irradiance restoration. ● **Enable**: During off-grid operation, automatic black start is performed after the irradiance restores. ● **Disable**: Automatic black start is not performed after the irradiance restores.

 Copyright © Huawei Technologies Co., Ltd.

Tab	Parameter	Description
	Automatic PCS recovery	Specifies whether to enable the function of automatic recovery in case of abnormal PCS shutdown. ● **Enable**: During off-grid operation, when the SmartLogger detects that the PCS shuts down abnormally and causes microgrid power failure, the SmartLogger automatically attempts to black start to restore the power supply. ● **Disable**: When the PCS shuts down abnormally, the SmartLogger does not perform automatic black start.
	Automatic recovery retries upon PCS exception	This parameter is displayed when **Automatic PCS recovery** is set to **Enable**. It specifies the number of automatic black start attempts upon PCS exception.
	Voltage secondary control	Specifies whether to enable secondary voltage regulation in off-grid operation.
Control Policy	Array end-of-charge SOC	Set the SOC threshold for stopping array charging. The default value is 100%. The default value is recommended. Set this parameter as required.
	Array end-of-discharge SOC	Set the SOC threshold for stopping array discharging. The default value is 5%. The default value is recommended. Set this parameter as required.
	End-of-charge SOC (off-grid)	Set the maximum SOC for charge in off-grid mode. The default value is 90%. Set this parameter as required.
	End-of-discharge SOC (off-grid)	Set the minimum SOC for discharge in off-grid mode. The default value 10% is recommended. Set this parameter as required.
	Min PV voltage for black start	After the solar irradiance recovers, the inverter PV voltage increases. If the PV1 voltage of an inverter is greater than or equal to **Min PV voltage for black start**, the black start function may be enabled.
	Minimum estimated power for black start	Specifies the minimum estimated power for black start. In the on/off-grid scenario, the default value is 70% of the rated power of the connected ESS. The value ranges from 5% to 70%.
	Reactive voltage regulation coefficient	This parameter is displayed when **Voltage secondary control** is set to **Enable**. Set the coefficient for voltage secondary regulation. The default value 2.00 is recommended.

 Copyright © Huawei Technologies Co., Ltd.

Tab	Parameter	Description
Off-grid charging control	Real-time SOC (%)	The output power of the inverter is controlled based on the current battery SOC to meet the battery charge power adjustment target. The value of **Real-time SOC (%)** ranges from **End-of-discharge SOC (off-grid)** to **End-of-charge SOC (off-grid)**. The value range of **Allowed Charge Power (%)** is [0, 70]%.
	Allowed Charge Power (%)	
Power Backup	Off-grid power backup	• **Enable**: The off-grid power backup function is enabled. When the SOC is less than or equal to **Min. SOC for off-grid power backup**, the ESS stops discharging to maintain sufficient power for off-grid operation. • **Disable**: The off-grid power backup function is disabled.
	Min. SOC for off-grid power backup (%)	This parameter is displayed when **Power Backup** is set to **Enable**. In on-grid mode, set **Min. SOC for off-grid power backup (%)**. The default value 40% is recommended. The value range is [10, 90]%. The precision is 1%.
	Prioritize off-grid power backup	This parameter is displayed when **Power Backup** is set to **Enable**. • **Enable**: After **Prioritize off-grid power backup** is set to **Enable**, if the current SOC is less than or equal to the min. SOC for off-grid power backup minus 3%, the ESS is charged preferentially by PV or grid power. • **Disable**: This function is disabled.
	Draw power from grid for off-grid power backup	This parameter is displayed when **Prioritize off-grid power backup** is set to **Enable**. • **Disable**: The ESS is not allowed to obtain power from the grid for off-grid power backup. • **Allow**: The ESS is allowed to obtain power from the grid for off-grid power backup.
	Charge power for off-grid power backup (kW)	This parameter is displayed when **Draw power from grid for off-grid power backup** is set to **Allow**. Set the power for charging the ESS by the grid for off-grid power backup. The default value is 100 kW, and the value range is [0.000, 50000.000] kW.

Step 3 Choose **Settings** > **Microgrid Control** > **On/Off-grid switching**, and set on/off-grid switching parameters.

 Copyright © Huawei Technologies Co., Ltd.

Table 6-26 On/Off-grid switching parameters

Tab	Parameter	Description
General Configuration	Automatic microgrid adaptability control	• **Enable**: When the system switches from on-grid to off-grid mode, the microgrid adaptability of the inverter is automatically enabled. When the system switches from off-grid to on-grid mode, the microgrid adaptability of the inverter is automatically disabled. • **Disable**: The automatic microgrid adaptability control function is disabled. The microgrid adaptability of the inverter is not automatically set during on/off-grid switching.
	On/Off-grid switching mode	• **No control**: All the operations involved in the on/off-grid switching are manually performed. If the customer needs to repair the equipment, you are advised to set this parameter to **No control**. • **Auto**: The on/off-grid switching will be performed automatically based on the status of the mains power. When you set **On/Off-grid switching mode** to this mode, an immediate on/off-grid switching may be triggered, depending on the status of the mains power. • **Manual**: You need to manually turn on or off the on/off-grid switch at the grid connection point.
Off-grid to On-grid	**Off-grid to on-grid** under **Manual On-grid/ Off-grid Switching**	If **On/Off-grid switching mode** is set to **Manual**, click **Off-grid to on-grid** before switching from off-grid to on-grid mode. After the PV+ESS system shuts down, turn on the on/off-grid switch locally. After the switch is turned on, the PV+ESS system automatically restarts.
On/Off-grid switch control	On/Off-grid switch control	This function is used to check the status of the on/off-grid switch. Before the check, the array shall be shut down. • **Close**: The on/off-grid switch is turned on, switching the system from off-grid to on-grid state. Click **Off-grid to on-grid** before switch-on. • **Open**: The on/off-grid switch is turned off, switching the system from on-grid to off-grid state. **NOTE** • In the on/off-grid (PQ/VSG) scenario, the on/off-grid switching will be performed according to the status of the on/off-grid switch only when **On/Off-grid switching mode** is set to **Auto** or **Manual**. • In the on/off-grid (PQ/VSG) scenario, the **Close** and **Open** buttons are available only when the DO ports of **Switch-off control port** and **Switch-on control port** under **On/Off-grid switch** are configured. • When the on/off-grid switch is on, the **Close** button is grayed out, and the **Open** button is available. • When the on/off-grid switch is in invalid state, the **Close** and **Open** buttons are grayed out.

 Copyright © Huawei Technologies Co., Ltd.

----End

6.6.2 On-grid/Off-grid (VSG)

Step 1 Choose **Settings** > **Microgrid Control** > **General Configuration** and set general configuration parameters.

Table 6-27 General configuration parameters

Parameter	Description
MGCC Mode under **Microgrid**	This parameter is displayed as **Enable**. You can change the setting only through the deployment wizard.
Microgrid scenario under **Microgrid**	If this parameter is set to **On-grid/Off-grid (VSG)**, you can change the setting only through the deployment wizard.
Genset start/stop control port under **Genset**	• If the genset is controlled by the SmartLogger, set the DO port that controls genset startup and shutdown based on the actual cable connections. • If the genset is controlled by the ATS, set this parameter to **No**. It is recommended that the genset be controlled by the ATS.

Step 2 Choose **Settings** > **Microgrid Control** > **Dispatch Control** to set dispatch control parameters.

Table 6-28 Dispatch control parameters

Tab	Parameter	Description
Control Policy	Automatic black start after irradiance restoration	Specifies whether to enable automatic black start after irradiance restoration. • **Enable**: During off-grid operation, automatic black start is performed after the irradiance restores. • **Disable**: Automatic black start is not performed after the irradiance restores.
	Automatic PCS recovery	Specifies whether to enable the function of automatic recovery in case of abnormal PCS shutdown. • **Enable**: During off-grid operation, when the SmartLogger detects that the PCS shuts down abnormally and causes microgrid power failure, the SmartLogger automatically attempts to black start to restore the power supply. • **Disable**: When the PCS shuts down abnormally, the SmartLogger does not perform automatic black start.
	Automatic recovery retries upon PCS exception	This parameter is displayed when **Automatic PCS recovery** is set to **Enable**. It specifies the number of automatic black start attempts upon PCS exception.

 Copyright © Huawei Technologies Co., Ltd.

Tab	Parameter	Description
	Voltage secondary control	Specifies whether to enable secondary voltage regulation in off-grid operation.
Control Policy	Array end-of-charge SOC	Set the SOC threshold for stopping array charging. The default value is 100%. The default value is recommended. Set this parameter as required.
	Array end-of-discharge SOC	Set the SOC threshold for stopping array discharging. The default value is 5%. The default value is recommended. Set this parameter as required.
	End-of-charge SOC (on-grid)	Set the maximum SOC for charge in on-grid mode. The default value 90% is recommended. The value range is [85, 98]%.
	End-of-charge SOC (off-grid)	Set the maximum SOC for charge in off-grid mode. The default value is 90%. Set this parameter as required.
	End-of-discharge SOC (off-grid)	Set the minimum SOC for discharge in off-grid mode. The default value 10% is recommended. Set this parameter as required.
	Min PV voltage for black start	After the solar irradiance recovers, the inverter PV voltage increases. If the PV1 voltage of an inverter is greater than or equal to **Min PV voltage for black start**, the black start function may be enabled.
	Minimum estimated power for black start	Specifies the minimum estimated power for black start. In the on/off-grid scenario, the default value is 70% of the rated power of the connected ESS. The value ranges from 5% to 70%.
	Reactive voltage regulation coefficient	This parameter is displayed when **Voltage secondary control** is set to **Enable**. Set the coefficient for voltage secondary regulation. The default value 2.00 is recommended.
Off-grid charging control	Real-time SOC (%)	The output power of the inverter is controlled based on the current battery SOC to meet the battery charge power adjustment target. The value of **Real-time SOC (%)** ranges from **End-of-discharge SOC (off-grid)** to **End-of-charge SOC (off-grid)**. The value range of **Allowed Charge Power (%)** is [0, 70]%.
	Allowed Charge Power (%)	
Genset Control	Genset Auto Control	• **Enable**: Enable the automatic control of genset startup and shutdown. If the ESS is shut down, the genset automatically starts to supply power to loads. • **Disable**: Disable the automatic control of genset startup and shutdown.

 Copyright © Huawei Technologies Co., Ltd.

Tab	Parameter	Description
	Genset Manual Control	• **Power-On**: Manually start the genset. • **Power-Off**: Manually shut down the genset.
Power Backup	Off-grid power backup	• **Enable**: The off-grid power backup function is enabled. When the SOC is less than or equal to **Min. SOC for off-grid power backup**, the ESS stops discharging to maintain sufficient power for off-grid operation. • **Disable**: The off-grid power backup function is disabled.
	Min. SOC for off-grid power backup (%)	This parameter is displayed when **Power Backup** is set to **Enable**. In on-grid mode, set **Min. SOC for off-grid power backup (%)**. The default value 40% is recommended. The value range is [10, 90]%. The precision is 1%.
	Prioritize off-grid power backup	This parameter is displayed when **Power Backup** is set to **Enable**. • **Enable**: After **Prioritize off-grid power backup** is set to **Enable**, if the current SOC is less than or equal to the min. SOC for off-grid power backup minus 3%, the ESS is charged preferentially by PV or grid power. • **Disable**: This function is disabled.
	Draw power from grid for off-grid power backup	This parameter is displayed when **Prioritize off-grid power backup** is set to **Enable**. • **Disable**: The ESS is not allowed to obtain power from the grid for off-grid power backup. • **Allow**: The ESS is allowed to obtain power from the grid for off-grid power backup.
	Charge power for off-grid power backup (kW)	This parameter is displayed when **Draw power from grid for off-grid power backup** is set to **Allow**. Set the power for charging the ESS by the grid for off-grid power backup. The default value is 100 kW, and the value range is [0.000, 50000.000] kW.

NOTE

Array end-of-charge SOC > **End-of-charge SOC (on-grid)** or **End-of-charge SOC (off-grid)** ≥ **Backup power SOC for peak shaving** ≥ **Min. SOC for off-grid power backup** > **End-of-discharge SOC (off-grid)** > **Array end-of-discharge SOC**

Step 3 Choose **Settings** > **Microgrid Control** > **On/Off-grid switching**, and set on/off-grid switching parameters.

Table 6-29 On/Off-grid switching parameters

Tab	Parameter	Description
On-grid to Off-grid	**Switch to Off-grid** under **Planned switching control**	After the planned switching control is started, the on/off-grid switch is turned off and the system enters off-grid state.
Off-grid to On-grid	**Auto switching to on-grid** under **Automatic Off-grid to On-grid Switching**	• **Enable**: If the mains voltage is stable, the system automatically switches from off-grid to on-grid state after the synchronization of the relay protection device is successful. • **Disable**: Disable the function of automatic switching from off-grid to on-grid.
	Setting value of high voltage under **Criteria of Stable Grid**	Specifies the allowed error range of the grid voltage. The default value 90% is recommended. If the voltage is within [Setting value of high voltage, 110]% of the rated voltage, the voltage is considered stable.
	Continuous power available for under **Criteria of Stable Grid**	Specifies the minimum duration for the grid voltage to remain stable. The default value 10s is recommended.
	Max switching time under **Conditions for Off-grid to On-grid Switching**	Specifies the maximum time for switching from the off-grid mode to the on-grid mode. The default value 630s is recommended. **Max switching time** must be greater than the maximum duration for the synchronization check of the relay protection device.
	Off-grid to on-grid under **Manual On-grid/Off-grid Switching**	Set **Auto switching to on-grid** to **Disable**. To switch from off-grid to on-grid, click **Off-grid to on-grid** first. When the mains voltage is stable, synchronization will be performed. After the synchronization is successful, the on/off-grid switch is turned on and the system enters on-grid state.

 Copyright © Huawei Technologies Co., Ltd.

Tab	Parameter	Description
On/Off-grid switch control	On/Off-grid switch control	This function is used to check the status of the on/off-grid switch. Before the check, the array shall be shut down. ● **Close**: The on/off-grid switch is turned on and the system checks whether the relay protection device has correctly controlled the switch-on. ● **Open**: The on/off-grid switch is turned off and the system checks whether the relay protection device has correctly controlled the switch-off. **NOTE** ● In the on/off grid (VSG) scenario, if the relay protection device is offline, the **Close** and **Open** buttons are grayed out. ● When the on/off-grid switch is off, the **Close** button is available, and the **Open** button is grayed out. ● When the on/off-grid switch is on, the **Close** button is grayed out, and the **Open** button is available. ● When the on/off-grid switch is in invalid state, the **Close** and **Open** buttons are grayed out.

----End

6.6.3 Off-Grid

Step 1 Choose **Settings** > **Microgrid Control** > **General Configuration** and set general configuration parameters.

Table 6-30 General configuration parameters

Parameter	Description
MGCC Mode under **Microgrid**	This parameter is displayed as **Enable**. You can change the setting only through the deployment wizard.
Microgrid scenario under **Microgrid**	This parameter is displayed as **Off-grid**. You can change the setting only through the deployment wizard.

Parameter	Description
Switch status port under **Load Switch**	Set these parameters based on the actual cable connections. If you need to modify the parameters after the settings are submitted, the automatic control function of the load switch may fail. You can set **Automatic load connection/shedding** to **Enable** again or click **Function Reset** in **Automatic load control status** to restore the function. **DI port status** can be set to **Open** or **Close**. If the actual status of the load switch is inconsistent with **Status**, change the setting of **DI port status**.
DI port status under **Load Switch**	
Switch-off control port under **Load Switch**	Set the DO port for turning off the load switch.
Switch-on control port under **Load Switch**	Set the DO port for turning on the load switch.

Step 2 Choose **Settings** > **Microgrid Control** > **Dispatch Control** to set dispatch control parameters.

Table 6-31 Dispatch control parameters

Tab	Parameter	Description
Control Policy	Automatic load connection/shedding	Specifies whether to enable automatic load connection/shedding. When you manually operate the load switch, this function is temporarily locked. You can restore this function in one of the following ways: ● Perform a successful black start. ● Set this parameter to **Enable**. ● Click **Function Reset** in **Automatic load control status**.
	Automatic black start after irradiance restoration	Specifies whether to enable automatic black start after irradiance restoration. ● **Enable**: During off-grid operation, automatic black start is performed after the irradiance restores. ● **Disable**: Automatic black start is not performed after the irradiance restores.
	Automatic PCS recovery	Specifies whether to enable the function of automatic recovery in case of abnormal PCS shutdown. ● **Enable**: During off-grid operation, when the SmartLogger detects that the PCS shuts down abnormally and causes microgrid power failure, the SmartLogger automatically attempts to black start to restore the power supply. ● **Disable**: When the PCS shuts down abnormally, the SmartLogger does not perform automatic black start.

 Copyright © Huawei Technologies Co., Ltd.

Tab	Parameter	Description
	Automatic recovery retries upon PCS exception	This parameter is displayed when **Automatic PCS recovery** is set to **Enable**. It specifies the number of automatic black start attempts upon PCS exception.
	Voltage secondary control	Specifies whether to enable secondary voltage regulation in off-grid operation.
Control Policy	Array end-of-charge SOC	Set the SOC threshold for stopping array charging. The default value is 100%. The default value is recommended. Set this parameter as required.
	Array end-of-discharge SOC	Set the SOC threshold for stopping array discharging. The default value is 5%. The default value is recommended. Set this parameter as required.
	End-of-charge SOC (off-grid)	Set the maximum SOC for charge in off-grid mode. The default value 90% is recommended.
	SOC threshold for stopping load shedding	The default value 30% is recommended. If the SOC is greater than or equal to **SOC threshold for stopping load shedding**, the load switch is automatically turned on to supply power to loads. If you manually turn on or off the load switch, the automatic control function of the load switch will be automatically disabled. This function can be restored only after the SmartLogger is restarted or the black start is successful in the off-grid scenario.
	SOC threshold for starting load shedding	The default value 20% is recommended. If the SOC is less than or equal to **SOC threshold for starting load shedding**, the load switch is automatically turned off to reduce the ESS discharge power. If you manually turn on or off the load switch, the automatic control function of the load switch will be automatically disabled. This function can be restored only after the SmartLogger is restarted or the black start is successful in the off-grid scenario.
	End-of-discharge SOC (off-grid)	Set the minimum SOC for discharge in off-grid mode. The default value 10% is recommended.
	Min PV voltage for black start	After the solar irradiance recovers, the inverter PV voltage increases. If the PV1 voltage of an inverter is greater than or equal to **Min PV voltage for black start**, the black start function may be enabled.
	Minimum estimated power for black start	Specifies the minimum estimated power for black start. In the off-grid scenario, the default value is 10% of the rated power of the connected ESS. The value ranges from 5% to 70%.

 Copyright © Huawei Technologies Co., Ltd.

Tab	Parameter	Description
	Reactive voltage regulation coefficient	This parameter is displayed when **Voltage secondary control** is set to **Enable**. Set the coefficient for voltage secondary regulation. The default value 2.00 is recommended.
Off-grid charging control	Real-time SOC (%)	The output power of the inverter is controlled based on the current battery SOC to meet the battery charge power adjustment target. The value of **Real-time SOC (%)** ranges from **End-of-discharge SOC (off-grid)** to **End-of-charge SOC (off-grid)**. The value range of **Allowed Charge Power (%)** is [0, 70]%.
	Allowed Charge Power (%)	
Manual Load Control	Automatic load control status	Specifies the automatic load control status. If the value is **Locked**, you can click **Function Reset** to restore the value to **Normal**.
	Load switch status	This function is used to check the load switch status. Before the check, the array shall be shut down. ● **Close**: Loads are connected. ● **Open**: Loads are disconnected. **NOTE** ● In the off-grid scenario, the **Close** and **Open** buttons are available only when the DO ports of **Switch-off control port** and **Switch-on control port** under **Load Switch** are configured. ● When the load switch is off, the **Close** button is available, and the **Open** button is grayed out. ● When the load switch is on, the **Close** button is grayed out, and the **Open** button is available. ● When the load switch is in invalid state, the **Close** and **Open** buttons are grayed out.

NOTE

Array end-of-charge SOC > **End-of-charge SOC (off-grid)** ≥ **SOC threshold for stopping load shedding** > **SOC threshold for starting load shedding** > **End-of-discharge SOC (off-grid)** > **Array end-of-discharge SOC**

----End

6.6.4 Black Start

Choose **Settings** > **Microgrid Control** > **Black Start** to view the black start status and perform black start manually.

NOTICE

For manual black start, before clicking **Starting** under **Settings** > **Microgrid Control** > **Black Start**, ensure that **Current Battery SOC** is higher than 2%. Otherwise, black start may fail.

Parameter	Description
Current Battery SOC	View the current battery SOC.
Black Start Progress	View the black start progress.
Status	• Black start failed. Cause: All ESSs are offline. • Black start failed. Cause: No ESS is available for black start. • Black start failed. Cause: No PCS is available for black start. • Black start failed. Cause: No PCS is prepared for black start. • Black start failed. Cause: No PCS has established the voltage for black start. • Manual black start in progress • Automatic black start in progress: The current battery SOC is higher than **Min. Battery SOC for Black Start**. – When **MGCC Mode** is set to **Enable**, **Microgrid scenario** is set to **On-grid/Off-grid (PQ/VSG)**, and **On/Off-grid switching mode** is set to **Auto**, black start is automatically triggered if the mains triggers the on/off-grid switching. – When **MGCC Mode** is set to **Enable**, **Microgrid scenario** is set to **On-grid/Off-grid (PQ/VSG)**, and **On/Off-grid switching mode** is set to **Manual**, black start is automatically triggered if you turn off on-grid/off-grid switch locally to trigger the on/off-grid switching manually. – When **MGCC Mode** is set to **Enable**, if the voltage on the PCS AC side is abnormal (less than 30% of the rated voltage on the PCS AC side) and the PCS is shut down abnormally, black start is automatically triggered. – When **MGCC Mode** is set to **Enable** and **Microgrid scenario** is set to **Off-grid**, if the solar irradiance recovers for inverters and no PCS is running, turn off the load switch and then the black start is automatically triggered. • Black start succeeded

 Copyright © Huawei Technologies Co., Ltd.

6.7 Setting Feature Parameters

Array MPPT

Table 6-32 Array MPPT

Parameter	Description
Array MPPT	Specifies whether to enable array MPPT.
Array MPPT status	Displays the current status.

Periodic Insulation Resistance Detection

The PCS insulation resistance detection function periodically triggers PCS startup and shutdown to check whether the system has a risk of low insulation resistance.

Choose **Settings > Feature Parameters** and set the PCS insulation resistance detection parameter. If a dialog box **You are advised to change the insulation resistance detection time to the optimal time** *(XX:XX)* is displayed, you are advised to click **Confirm**, go to the **Feature Parameters** page, and set **Detection start time** to the optimal time. This policy applies only to the C&I scenario and is supported in SmartLogger V300R023C00SPC172 and later versions.

Table 6-33 Periodic insulation resistance detection

Parameter	Description
Insulation resistance detection	Specifies whether to enable insulation resistance detection.
Detection start time[1]	Specifies the time when the PCS insulation resistance detection function starts. The default value is 02:00.
Detection interval	Specifies the interval for periodic insulation resistance detection.
Note [1]: You can set this parameter in SmartLogger V300R023C00SPC153 and later versions. LUNA2000-215-2S10 and LUNA2000-215-2S12 do not support this parameter.	

 Copyright © Huawei Technologies Co., Ltd.

PCS Power Reference

Table 6-34 PCS power reference

Parameter	Description
Power reference synchronization	Specifies whether to enable power reference synchronization.
Active power	Specifies the active power (%).
Reactive power compensation (Q/S)	Specifies the reactive power compensation.

Black Start

Table 6-35 Black start

Parameter	Description
Black Start Voltage Establishment Time	Specifies the time for establishing array-level black start voltage. The setting is synchronized to the ESS, and the ESS must establish black start voltage within the specified time. If the ESS does not establish black start voltage within the specified time, an alarm will be generated. You are advised to set this parameter by referring to the corresponding solution manual. The default value is N/A. An incorrect setting may cause black start failure. Exercise caution when setting this parameter. If you have any question, contact technical support.

6.8 Power Grid Scheduling

6.8.1 Power Adjustment Description

According to standard requirements, the SmartLogger can reliably adjust power for the connected solar inverters/Smart PCS in real time to ensure that the plant can respond to requirements of the power grid company in a timely manner.

 Copyright © Huawei Technologies Co., Ltd.

NOTICE

- To ensure that the SmartLogger will deliver scheduling commands to the connected solar inverters or Smart PCS, you must select the active or reactive power control mode before adjusting the active or reactive power for a PV plant.
- If **Active power control mode** is set to **No limit** or **Reactive power control mode** is set to **No output**, the SmartLogger does not send scheduling commands to the connected solar inverters or Smart PCS.

6.8.2 Setting Active Power Control

If the plant has requirements of power limitation, the power grid scheduling personnel should limit the active power or disable all the active power for the plant, that is, to enable the active power derating mode.

Step 1 Choose **Monitoring** > **Inverter** > **Running Param.** > **Power Adjustment**. On the page that is displayed, check that **Remote power schedule** is set to **Enable**.

Step 2 Set the parameters for active power control and click **Submit**.

Figure 6-48 Active power control

----End

No Limit

Parameter	Description
Active power control mode	If this parameter is set to **No limit**, the device operates at full load, and the Smart PCS limits the power based on the energy storage control policy.

Copyright © Huawei Technologies Co., Ltd.

DI Active Scheduling

NOTICE

- When setting this function, ensure that the user-defined DI port is not occupied. Otherwise, the setting will fail.
- When setting this function, ensure that the SmartLogger is correctly connected to a ripple control receiver. (In Germany and some other European areas, a ripple control receiver is used to convert a power grid scheduling signal to a dry contact signal, in which a dry contact is needed.)
- When both remote scheduling and scheduling via DI are enabled, the control with a lower active power percentage value is preferentially responded (this function is supported only when the remote scheduling command is sent through the PV+ESS collaboration interface).

Parameter	Description
Active power control mode	Set this parameter to **DI active scheduling**.
Remote communication scheduling	Set this parameter to **Start-up**, DI active scheduling and remote communication scheduling work at the same time.
DI **NOTE** DI parameters include **DI1**, **DI2**, **DI3**, **DI4**, and **Percentage(%)**.	• Supports 16 levels of percentages. • "√" indicates a low level. When the four DI ports of the SmartLogger are connected, the ports are low-level ports. When not connected, the ports are high-level ports. • The percentage levels of DI1–DI4 must differ from each other. Otherwise, an exception will occur during command parsing. • If the actual input DI signal is inconsistent with that configured on the WebUI, the SmartLogger controls the inverter to work at full power and the **Abnormal Active Schedule** alarm is raised.

Percentage Fixed-Value Limitation (Open Loop)

The SmartLogger provides simplified active power percentage configuration as well as power control automation, that is, to automatically adjust the active power derating percentage in different periods of a day.

Parameter	Description
Active power control mode	Set this parameter to **Percentage fixed-value limitation (open loop)** to control the maximum output power of the devices by time segment.

Copyright © Huawei Technologies Co., Ltd.

Parameter	Description
Start time	If the device is required to run with specified maximum power in certain periods of a day, add records based on site requirements. When multiple time points are set, the device will run with the maximum power specified for the time point that is earlier than and the closest to the current system time. For example, if you add 00:00:00 and 12:00:00 on the WebUI and the current system time is 14:30:00, the device will run with the maximum power specified for 12:00:00. **NOTICE** The device will not follow the setting after 00:00:00. To allow the device to follow the setting across days, you need to specify the setting for 00:00:00.
Percentage(%)	

Remote Communication Scheduling

The management system or independent power adjustment device sends scheduling commands over the communications port that supports Modbus TCP, GOOSE, or IEC 104, without the need of user configuration or operation. The SmartLogger can automatically switch between scheduling modes and send scheduling commands.

Parameter	Description
Active power control mode	Set this parameter to **Remote communication scheduling**. The SmartLogger parses the scheduling command delivered by the upper-layer management system to valid instruction data that can be identified by the devices in the plant and delivers the data to all devices connected to the SmartLogger. As the **Remote communication scheduling** mode has a higher priority, the SmartLogger automatically changes **Active power control mode** to **Remote communication scheduling** after receiving a scheduling command from the upper-layer management system.

 Copyright © Huawei Technologies Co., Ltd.

Parameter	Description
Schedule strategy	The value can be **Disable**, **Strategy 1**, **Strategy 2** or **Strategy 3**. The default value is **Strategy 1**. ● **Disable**: The SmartLogger controls the device to work at full load and will not receive scheduling commands sent by the management system. ● **Strategy 1**: Open-loop scheduling policy. That is, the SmartLogger evenly allocates the power value from the scheduling and delivers the average value to each device, which then operates with the specific power. The adjustment value delivered by the SmartLogger is constant. If **Adjustment coefficient** is set, the power value will be sent to the device after being multiplied by the preset coefficient. ● **Policy 2**: This policy can be set only in the utility-scale PV-only scenario. Set **Overshoot**, **Adjustment period**, and **Adjustment deadband** based on the scheduling requirements of the power plant. – **Overshoot**: Indicates the maximum overshoot percentage during adjustment. If a plant cannot reach the preset target value due to factors such as insufficient sunlight, the set target value is the current value plus the overshoot. – **Adjustment period**: Indicates the time required from adjustment instruction delivery, device response to the instruction, to the detection of the preceding actions by the SmartLogger. – **Adjustment deadband**: Indicates the percentage of the adjustment deviation value to the rated output capacity. In the adjustment deadband, strategy 2 does not deliver control instructions but still detects the deviation in real time. ● **Strategy 3**: In the feed-in limitation scenario of the master and slave SmartLoggers, set this parameter to **Strategy 3** for the slave SmartLogger.
Adjustment coefficient	Coefficient for calculating the target value of active power adjustment. The default value is 1.000.
Shutdown upon communication exceptions	The default value is **Disable**. If this parameter is set to **Enable**, the SmartLogger shuts down the device after the SmartLogger has failed to receive remote communication scheduling commands for a period longer than the set value of **Time for communication exception detection**.

 Copyright © Huawei Technologies Co., Ltd.

Parameter	Description
Time for communication exception detection (s)	The default value is **300**. This parameter is used only for shutdown protection when the communication is abnormal. If the SmartLogger has failed to receive remote communication scheduling commands for a period longer than the set value, the communication is determined as abnormal.
Automatic startup upon communication recovery	The default setting is **Enable**. If this parameter is set to **Enable**, the device automatically starts if remote communication scheduling commands can be received normally again after a communication exception occurs.
Limit solar inverter power upon active power scheduling timeout	The default value is **Disable**. If this parameter is set to **Enable**, the SmartLogger controls the device in the following ways after the SmartLogger has failed to receive remote communication scheduling commands for a period longer than the set value of **Active power scheduling timeout threshold for triggering solar inverter power limiting**. ● Limit the active power of the inverter based on the value of **Power (in percentage of rated power) of solar inverter in case of active power scheduling timeout**. ● Limit the active power of the ESS based on the value of **Power (in percentage of rated power) of ESS in case of active power scheduling timeout**.
Active power scheduling timeout threshold for triggering solar inverter power limiting (s)	The default value is **300.0**. This parameter is used only for active power limiting protection when the communication is abnormal. If the SmartLogger has failed to receive remote communication scheduling commands for a period longer than the set value, active power limiting protection is started.
Power (in percentage of rated power) of solar inverter in case of active power scheduling timeout (%)	The default value is **0.0**. After **Limit solar inverter power upon active power scheduling timeout** is enabled, if the SmartLogger has failed to receive remote communication scheduling commands for a period longer than the set value of **Active power scheduling timeout threshold for triggering solar inverter power limiting**, the SmartLogger limits the active power of the inverter based on the set value of this parameter.

 Copyright © Huawei Technologies Co., Ltd.

Parameter	Description
Power (in percentage of rated power) of ESS in case of active power scheduling timeout (%)	The default value is **0.0**. After **Limit solar inverter power upon active power scheduling timeout** is enabled, if the SmartLogger has failed to receive remote communication scheduling commands for a period longer than the set value of **Active power scheduling timeout threshold for triggering solar inverter power limiting**, the SmartLogger limits the active power of the ESS based on the set value of this parameter.
Filter same scheduling commands	**Enable**: The SmartLogger filters the same scheduling commands delivered in the northbound direction. **Disable**: The SmartLogger does not filter the same scheduling commands delivered in the northbound direction.

NOTE

If the communication between the SmartLogger and the scheduling backend is disconnected and the communication exception protection parameters are not set to **Enable**, the active power is controlled based on the scheduling command sent before the disconnection.

Export Limitation (kW)

NOTICE

- You are advised to choose **Settings** > **Export Limitation** and enable the function of limiting feed-in power.
- To enable this function, you need to set meter, inverter/Smart PCS, and export limitation parameters. This section describes how to set export limitation parameters.
- Before setting the parameters, ensure that the power meter is correctly connected to the SmartLogger.

Step 1 Set export limitation parameters and click **Submit**.

Parameter	Description
Active power control mode	Set this parameter to **Export Limitation(kW)**.
Start control	When this parameter is set to **Yes**, the power limiting function takes effect.

 Copyright © Huawei Technologies Co., Ltd.

Parameter	Description
Electric meter power direction	● **Positive**: default value. – Cables are correctly connected to the meter. – If cables are reversely connected to the meter and the NMS does not support reverse connection[1], set **Meter access direction**[2] to **Reverse** and **Electric meter power direction** to **Positive**. ● **Reverse**: applicable to feed-in meters. If cables connected to the meter are in reverse polarity and the NMS supports reverse connection, set **Meter access direction** to **Reverse_Report raw data** and **Electric meter power direction** to **Reverse**.
Limitation mode	● Total power: controls the total power at the grid-connection point to limit the power fed to the power grid. ● Single-phase power: controls the power of each phase at the grid-connection point to limit the power fed to the power grid.
Maximum grid feed-in power	Indicates the maximum power that the device can feed into the power grid. Suggestion: Set this parameter based on the feed-in threshold allowed by the power grid company. ● Upper limit: **50000**. ● Lower limit: – If **Peak Shaving** is set to **Active power limit** or **Apparent power limit**, the lower limit is determined by the value of **Peak Power**. (You can view the value after choosing **Settings** > **Battery Settings** > **Capacity Control**.) For example, if **Peak Power** is set to **50**, the lower limit is **–50**. – If **Peak Shaving** is set to **No control**, the lower limit is **–1000**.
Power lowering adjustment period	Specifies the period for lowering the device output power.
Maximum protection time	Specifies the maximum duration from the time when the SmartLogger detects feed-in to the time when the device output power reaches 0. Suggestion: Set this parameter based on the maximum feed-in duration allowed by the power grid company.

 Copyright © Huawei Technologies Co., Ltd.

Parameter	Description
Power raising threshold	When the power supply from the grid reaches this threshold, the devices start to raise their output power. The recommended value of this parameter is 1% to 2% of Pn. Pn is the total rated output power of devices and can be queried on the overview page of the SmartLogger.
Three-phase imbalance control[3]	The default value is **Disable**. If this parameter is set to **Enable**, three-phase independent control is used.
PV Power Limit Upon Communication Failure	Set the inverter output power percentage when communication between the SmartLogger and the meter is abnormal.
PCS Power Limit Upon Communication Failure	Set the PCS output power percentage when communication between the SmartLogger and the meter is abnormal.
Switch-off with 0% power limit	Set whether the DO port is allowed to control switch-off.
Switch-off control port	Set this parameter to the DO port that controls switch-off.
Switch-on control port	Set this parameter to the DO port that controls switch-on.
Switch-off state feedback port	Set this parameter to the DI port that reports the switch-off status.
Switch-on state feedback port	Set this parameter to the DI port that reports the switch-on status.
Note [1]: If cables connected to the meter are in reverse polarity and the NMS can correctly display the real-time data of the meter, it is considered that the NMS supports reverse connection. That is, the NMS reverses the active power, reactive power, power factor, phase A active power, phase B active power, and phase C active power, replaces the total positive active energy and total negative active energy with each other, and replaces the total positive reactive power and total negative reactive power with each other. Note [2]: **Meter access direction** is set in the meter running parameters. Note [3]: If the three-phase imbalance control function is enabled or disabled, the PCS will restart. If this parameter is set to **Enable**, ensure that the following condition is met: Maximum load phase power – Minimum load phase power < 1/3 x Rated array ESS power.	

Step 2 Verify that the SmartLogger can remotely turn on and off circuit breakers in scenarios with circuit breakers.

- Click **Switch off** and check that the circuit breaker is switched off properly.

- Click **Switch on** and check that the circuit breaker is switched on properly.

----End

Remote Output Control

Step 1 Synchronize the clock source of the server.

Path	Parameter	Description
Settings > **User Param.** > **Date&Time**	Clock source	Set this parameter to **NTP**.
	Synchronization server	Set this parameter to the IP address or domain name of the server for time synchronization.
	NTP synchronization test	You can click this button to check the time synchronization status.

Step 2 Set remote output control parameters.

Path	Parameter	Description
Settings > **Active Power Control**	Active power control mode	Set this parameter to **Remote output control**.
	Control area	Set this parameter to the area where the remote output control function is used. To enable the function in some areas, the license needs to be imported and enabled.
	Output control duration	Set this parameter to the time required for the device to change its output power from 0% to 100% or from 100% to 0%.
	PV plant ID	Set this parameter to the PV plant ID.
	Remote output control server	Set this parameter to the IP address or domain name of the server.
	Enable certificate	Determine whether to import and enable a certificate based on the actual situation.

 Copyright © Huawei Technologies Co., Ltd.

Path	Parameter	Description
	Selling surplus power	• **Disable**: The inverter output power is controlled by the SmartLogger according to the remote output control command issued by the power company. The output power of the PV plant cannot exceed the active power scheduling value issued by the power company. • **Enable**: When the load power is less than or equal to the remote output control command, the inverter output power is determined according to the remote output control command. Power can be bought or sold at the grid-connection point. When the load power is greater than the remote output control command, the SmartLogger automatically adjusts the inverter output power to achieve zero-power at the grid-connection point, that is, power cannot be sold at the grid-connection point.
	PV module capacity	Set this parameter to the capacity of PV modules connected to the plant.
	Plant AC capacity	Set this parameter to the AC capacity of the limited feed-in power from the plant.

NOTE

- If the connection between the SmartLogger and the server is abnormal, click **Submit** and then **Import** to import the output control file in **.data** format obtained from the website of the utility company to the SmartLogger.
- After the SmartLogger connects to the server, you can export the relevant file.

----End

6.8.3 Setting Reactive Power Control

Large-scale plants are required to adjust the voltage at the grid-connection point. Power grid scheduling personnel enable a plant to absorb or add reactive power at the grid-connection point, that is, to enable the reactive power compensation, based on the real-time reactive power transmission status in the power grid.

Step 1 Choose **Monitoring** > **Inverter** > **Running Param.** > **Power Adjustment**. On the page that is displayed, check that **Remote power schedule** is set to **Enable**.

Step 2 Set the parameters for reactive power control and click **Submit**.

Figure 6-49 Reactive power control

----End

No Output

Parameter	Description
Reactive power control mode	If the plant is not required to adjust the voltage at the grid-connection point or perform reactive power compensation, device can run with pure active output power. In this case, set this parameter to **No output**.

DI Reactive Scheduling

NOTICE

- When setting this function, ensure that the user-defined DI port is not occupied. Otherwise, the setting will fail.
- SmartLogger scenario: Before setting this function, ensure that the SmartLogger is properly connected to the ripple control receiver.
- SmartLogger+SmartModule scenario: Before setting this function, ensure that the SmartModule is properly connected to the ripple control receiver.

Table 6-36 SmartLogger scenario

Parameter	Description
Reactive power control mode	Set this parameter to **DI reactive scheduling**.

 Copyright © Huawei Technologies Co., Ltd.

Parameter	Description
DI **NOTE** DI parameters include **DI1**, **DI2**, **DI3**, **DI4**, and **Power factor**.	● Supports 16 levels of power factors. ● "√" indicates a low level. When the four DI ports of the SmartLogger are connected, the ports are low-level ports. When not connected, the ports are high-level ports. ● The percentage levels of DI1–DI4 must differ from each other. Otherwise, an exception will occur during command parsing. ● If the actual input DI signal is inconsistent with that configured on the WebUI, the SmartLogger controls the device to work at full power and the **Reactive Power Scheduling Instruction Exception** alarm is raised.

Table 6-37 SmartLogger+SmartModule scenario

Parameter	Description
Reactive power control mode	Set this parameter to **DI reactive scheduling**.
DI **NOTE** The DI parameters include **M1.DI1**, **M1.DI2**, **M1.DI3**, **M1.DI4**, and **Percentage**.	● Supports 16 levels of percentages. ● "√" indicates a low level. When the four DI ports of the SmartModule are connected, the ports are low-level ports. When not connected, the ports are high-level ports. ● The percentage levels of M1.DI1 to M1.DI4 must differ from each other. Otherwise, an exception will occur during command parsing. If the actual input DI signal is inconsistent with that configured on the WebUI, the SmartLogger controls the device to work at full power and the **Reactive Power Scheduling Instruction Exception** alarm is raised.

NOTE

- Before connecting the SmartModule to the SmartLogger, if **DI reactive scheduling** has been configured for the DI port and the scheduling signal needs to be connected to the SmartModule, delete the DI configuration and reconfigure it.
- In the scenario where the SmartLogger and SmartModule are combined, if the SmartModule is removed and the scheduling signal needs to be connected to the SmartLogger, delete the DI configuration and reconfigure it.

 Copyright © Huawei Technologies Co., Ltd.

Reactive Power Fix Control

Parameter	Description
Reactive power control mode	If the array is required to generate constant reactive power at a specified time, set this parameter to **Reactive power fix control**.
Start time	If the device is required to run with specified maximum power in certain periods of a day, add records based on site requirements. When multiple time points are set, the device will run with the maximum power specified for the time point that is earlier than and the closest to the current system time. For example, if you add 00:00:00 and 12:00:00 on the WebUI and the current system time is 14:30:00, the device will run with the maximum power specified for 12:00:00. **NOTICE** The device will not follow the setting after 00:00:00. To allow the device to follow the setting across days, you need to specify the setting for 00:00:00.
Reactive power(kVar)	

Power Factor Fix Control

Parameter	Description
Reactive power control mode	If the plant is required to generate a constant power factor at the grid-connection point and the device is required to adjust the real-time reactive power based on the preset power factor, set this parameter to **Power factor fix control**.
Start time	If the device is required to run with specified power in certain periods of a day, add records based on site requirements. When multiple time points are set, the device will run with the power specified for the time point that is earlier than and the closest to the current system time. For example, if you add 00:00:00 and 12:00:00 on the WebUI and the current system time is 14:30:00, the device will run with the maximum power specified for 12:00:00. **NOTICE** The device will not follow the setting after 00:00:00. To allow the device to follow the setting across days, you need to specify the setting for 00:00:00.
Power factor	

Q-U Characteristic Curve

If the remote reactive power control command is not available, you can configure the characteristic curve as a substitute. The SmartLogger delivers the values

configured for the characteristic curve to the inverter or Smart PCS, which then operates according to the configuration. The SmartLogger no longer adjusts the values.

NOTICE

Configure the characteristic curve under instructions from professionals to ensure that the inverter or Smart PCS works properly.

In the Q-U characteristic curve control mode, the inverter or Smart PCS dynamically adjusts the ratio Q/S of output reactive power to apparent power in accordance with the ratio U/Un(%) of the actual grid voltage to the rated grid voltage.

Parameter	Description
Reactive power control mode	Set this parameter to **Q-U characteristic curve**.
Reactive power adjustment time	Specifies the change interval of the reactive power at the grid-connection point.
Trigger power percentage	Under a specific grid code, the characteristic curve takes effect only when the actual output active power of the device is greater than the specified value.
Exit power percentage	Under a specific grid code, the characteristic curve becomes invalid when the actual output active power of the device is less than the specified value.
Limit value for minimum PF	Limits the actual minimum PF when the Q-U characteristic curve takes effect.
Characteristic curve points	Specifies the number of points on the characteristic curve. The characteristic curve supports a maximum of 10 valid points.
U/Un (%)	When configuring the curve, ensure that the U/Un(%) value of a point is greater than the U/Un(%) value of the previous point. Otherwise, the message indicating invalid input will be displayed.
Q/S	

cosϕ-P/Pn Characteristic Curve (Inverter/PCS)

If the remote reactive power control command is not available, you can configure the characteristic curve as a substitute. The SmartLogger delivers the values configured for the characteristic curve to the inverter or Smart PCS, which then operates according to the configuration. The SmartLogger no longer adjusts the values.

 Copyright © Huawei Technologies Co., Ltd.

NOTICE

Configure the characteristic curve under instructions from professionals to ensure that the inverter or Smart PCS works properly.

In the cosϕ-P/Pn characteristic curve control mode, the inverter or Smart PCS dynamically adjusts the power factor cosϕ in accordance with the P/Pn (%) based on the VDE-4105 and BDEW German standards.

Parameter	Description
Reactive power control mode	Set this parameter to **cosϕ-P/Pn characteristic curve (inverter)** or **cosϕ-P/Pn characteristic curve (PCS)**.
Reactive power adjustment time	Specifies the change interval of the reactive power at the grid-connection point.
Characteristic curve points	Specifies the number of points on the characteristic curve. The characteristic curve supports a maximum of 10 valid points.
P/Pn(%)	When configuring the curve, ensure that the P/Pn(%) value of a point is greater than the P/Pn(%) value of the previous point. Otherwise, the message indicating invalid input will be displayed. **NOTE** When configuring the cosϕ-P/Pn characteristic curve of the PCS, note that a negative P/Pn(%) value indicates charging and a positive P/Pn(%) value indicates discharging.
cosϕ	

Q-U Hysteresis Curve (CEI0-16)

If the remote reactive power control command is not available, you can configure the characteristic curve as a substitute. The SmartLogger delivers the values configured for the characteristic curve to the inverter or Smart PCS, which then operates according to the configuration. The SmartLogger no longer adjusts the values.

NOTICE

Configure the characteristic curve under instructions from professionals to ensure that the inverter or Smart PCS works properly.

The Q-U hysteresis curve (CEI0-16) control mode is the Italian standard CEI0-16 version of the Q-U characteristic curve. It dynamically adjusts the output reactive power of the inverter or Smart PCS in accordance with the ratio of the actual voltage to the rated voltage. The target value of reactive power adjustment should be in the form of Q/S.

 Copyright © Huawei Technologies Co., Ltd.

Parameter	Description
Reactive power control mode	Set this parameter to **Q-U hysteresis curve(CEI0-16)**.
Reactive power adjustment time	Specifies the change interval of the reactive power at the grid-connection point.
Trigger power percentage	Under a specific grid code, the characteristic curve takes effect only when the actual output active power of the device is greater than the specified value.
Exit power percentage	Under a specific grid code, the characteristic curve becomes invalid when the actual output active power of the device is less than the specified value.
Limit value for minimum PF	Limits the actual minimum PF when the Q-U characteristic curve takes effect.
U/Un (%)	When configuring the curve, ensure that the U/Un(%) value of a point is greater than the U/Un(%) value of the previous point. Otherwise, the message indicating invalid input will be displayed. When configuring the curve, ensure that the Q/S values at points A and B are the same and set in sequence, and that the Q/S values at points C and D are the same and set in sequence. Otherwise, a message indicating invalid input is displayed.
Q/S	

Remote Communication Scheduling

The management system or independent power adjustment device sends scheduling commands over the communications port that supports Modbus TCP or IEC 104, without the need of user configuration or operation. The SmartLogger can automatically switch between scheduling modes and send scheduling commands.

Parameter	Description
Reactive power control mode	As the **Remote communication scheduling** mode has a higher priority, the SmartLogger automatically changes **Reactive power control mode** to **Remote communication scheduling** after receiving a scheduling command from the upper-layer management system. If this parameter is set to **Remote communication scheduling**, the SmartLogger parses the scheduling command delivered by the upper-layer management system to valid instruction data that can be identified by the devices in the plant and delivers the data to all devices connected to the SmartLogger.

 Copyright © Huawei Technologies Co., Ltd.

Parameter	Description
Shut down solar inverter upon reactive power scheduling timeout	The default value is **Disable**. If this parameter is set to **Enable**, the SmartLogger shuts down the device after the SmartLogger has failed to receive remote communication scheduling commands for a period longer than the set value of **Reactive power scheduling timeout threshold for triggering solar inverter shutdown**.
Reactive power scheduling timeout threshold for triggering solar inverter shutdown	The default value is **300**. This parameter is used only for shutdown protection when the communication for reactive power scheduling is abnormal. If the SmartLogger has failed to receive remote communication scheduling commands for a period longer than the set value, the communication is determined as abnormal.
Start up solar inverter upon recovery from reactive power scheduling timeout	The default value is **Enable**. If this parameter is set to **Enable**, after a reactive power signal timeout occurs, if the reactive power signal recovers, the device automatically starts.
Limit solar inverter power upon reactive power scheduling timeout	The default value is **Disable**. If this parameter is set to **Enable**, the SmartLogger controls the device in the following ways after the SmartLogger has failed to receive remote communication scheduling commands for a period longer than the set value of **Reactive power scheduling timeout threshold for triggering solar inverter power limiting**. ● Limit the reactive power of the inverter based on the value of **Q/S during power limiting of solar inverter in case of reactive power scheduling timeout**. ● Limit the reactive power of the PCS based on the value of **Q/S during power limiting of ESS in case of reactive power scheduling timeout**.
Reactive power scheduling timeout threshold for triggering solar inverter power limiting (s)	The default value is **300.0**. This parameter is used only for reactive power limiting protection when the communication is abnormal. If the SmartLogger has failed to receive remote communication scheduling commands for a period longer than the set value, reactive power limiting protection is started.

 Copyright © Huawei Technologies Co., Ltd.

Parameter	Description
Q/S during power limiting of solar inverter in case of reactive power scheduling timeout (%)	The default value is **0.000**. After **Limit solar inverter power upon reactive power scheduling timeout** is enabled, if the SmartLogger has failed to receive remote communication scheduling commands for a period longer than the set value of **Reactive power scheduling timeout threshold for triggering solar inverter power limiting**, the SmartLogger limits the reactive power of the inverter based on the set value of this parameter.
Q/S during power limiting of ESS in case of reactive power scheduling timeout (%)	The default value is **0.000**. After **Limit solar inverter power upon reactive power scheduling timeout** is enabled, if the SmartLogger has failed to receive remote communication scheduling commands for a period longer than the set value of **Reactive power scheduling timeout threshold for triggering solar inverter power limiting**, the SmartLogger limits the reactive power of the ESS based on the set value of this parameter.

NOTE

If the communication between the SmartLogger and the scheduling backend is disconnected and the communication exception protection parameters are not set to **Enable**, the reactive power is controlled based on the scheduling command sent before the disconnection.

Power Factor Closed-Loop Control (Old Policy)

NOTICE

Before setting the parameters, ensure that the power meter is correctly connected to the SmartLogger.

Parameter	Description
Reactive power control mode	Set this parameter to **Power factor closed-loop control (old policy)**.
Target power factor	Specifies the target value for the adjustment power factor of the power meter.
Adjustment period	Specifies the interval for sending adjustment commands by the SmartLogger.

Copyright © Huawei Technologies Co., Ltd.

Parameter	Description
Adjustment deadband	Specifies the adjustment power factor precision. **NOTICE** This parameter is valid only when the power factor of the power meter is greater than 0.9.

Power Factor Closed-Loop Control

To improve the revenue, a plant needs to reduce or avoid the power factor surcharge by performing distributed reactive power compensation. To enable the function, set the parameters related to power factor closed-loop control.

NOTICE

- You are advised to choose **Settings** > **Smart Reactive Power Compensation** to enable smart reactive power compensation.
- For versions earlier than SmartLogger V300R023C00SPC160, before setting the parameters, ensure that the license for smart reactive power compensation has been loaded on the **Maintenance** > **License Management** page.
- Before setting the parameters, ensure that the power meter is correctly connected to the SmartLogger.

Parameter	Description
Reactive power control mode	Set this parameter to **Power factor closed-loop control**.
Electric meter power direction	• **Positive**: default value. – Cables are correctly connected to the meter. – If cables are reversely connected to the meter and the NMS does not support reverse connection[1], set **Meter access direction**[2] to **Reverse** and **Electric meter power direction** to **Positive**. • **Reverse**: applicable to feed-in meters. If cables connected to the meter are in reverse polarity and the NMS supports reverse connection, set **Meter access direction** to **Reverse_Report raw data** and **Electric meter power direction** to **Reverse**.
Power meter	Set this parameter to **Smart meter**.
Target power factor	Specifies the target value for the adjustment power factor of the power meter. The target value shall be larger than the appraisal value of the plant power factor.

Copyright © Huawei Technologies Co., Ltd.

Parameter	Description
Adjustment period	Specifies the interval for sending adjustment commands by the SmartLogger.
Adjustment deadband	Specifies the adjustment power factor precision. **NOTICE** This parameter is valid only when the power factor of the power meter is greater than 0.9.
Reactive compensation delay	Specifies the delay time for starting the distributed power factor compensation if the current power factor is lower than the target power factor.
Note [1]: If cables connected to the meter are in reverse polarity and the management system can correctly display the real-time data of the meter, it is considered that the management system supports reverse connection. That is, the management system reverses the active power, reactive power, power factor, phase A active power, phase B active power, and phase C active power, replaces the total positive active energy and total negative active energy with each other, and replaces the total positive reactive power and total negative reactive power with each other. Note [2]: **Meter access direction** is set in the meter running parameters.	

NOTICE

When the SmartLogger receives a remote reactive power scheduling command from the plant, it automatically changes **Reactive power control mode** to **Remote communication scheduling**. If power factor closed-loop control is required, set **Reactive power control mode** to **Power factor closed-loop control** and set the target power factor correctly.

PF-U Characteristic Curve

If the remote reactive power control command is not available, you can configure the characteristic curve as a substitute. The SmartLogger delivers the values configured for the characteristic curve to the inverter or Smart PCS, which then operates according to the configuration. The SmartLogger no longer adjusts the values.

NOTICE

Configure the characteristic curve under instructions from professionals to ensure that the inverter or Smart PCS works properly.

In the PF-U characteristic curve control mode, the inverter or Smart PCS dynamically adjusts the PF at the device port based on the ratio U/Un(%) of the actual grid voltage to the rated grid voltage.

 Copyright © Huawei Technologies Co., Ltd.

Parameter	Description
Reactive power control mode	Set this parameter to **PF-U characteristic curve**.
Characteristic curve points	• Specifies the number of points on the characteristic curve. • The characteristic curve supports a maximum of 10 valid points.
U/Un (%)	When configuring the curve, ensure that the U/Un(%) value of a point is greater than that of the previous point. Otherwise, the "Invalid input" message will be displayed.
PF	

Q-P Characteristic Curve

If the remote reactive power control command is not available, you can configure the characteristic curve as a substitute. The SmartLogger delivers the values configured for the characteristic curve to the inverter or Smart PCS, which then operates according to the configuration. The SmartLogger no longer adjusts the values.

NOTICE

Configure the characteristic curve under instructions from professionals to ensure that the inverter or Smart PCS works properly.

In the control mode of the Q-P characteristic curve, the inverter or Smart PCS adjusts the ratio Q/Pn of the output reactive power to the rated power based on the ratio P/Pn of the current active power to the rated power.

Parameter	Description
Reactive power control mode	Set this parameter to **Q-P characteristic curve**.
Reactive power adjustment time	Specifies the change interval of the reactive power at the grid-connection point.
Characteristic curve points	• Specifies the number of points on the characteristic curve. • The characteristic curve supports a maximum of 10 valid points.
P/Pn	When configuring the curve, ensure that the P/Pn value of a point is greater than that of the previous point. Otherwise, the "Invalid input" message will be displayed.
Q/Pn	

 Copyright © Huawei Technologies Co., Ltd.

6.8.4 Setting Parameters for Shutdown at High Feed-in Power

NOTE

This section applies to V300R001C00 only.

The power grid company requires plants to limit or reduce the output power of a PV system when it is too high. If the output power cannot be limited to the range within the specified time, all inverters must be shut down.

Step 1 Set parameters for shutdown at high feed-in power and click **Submit**.

Figure 6-50 Shutdown at high feed-in power

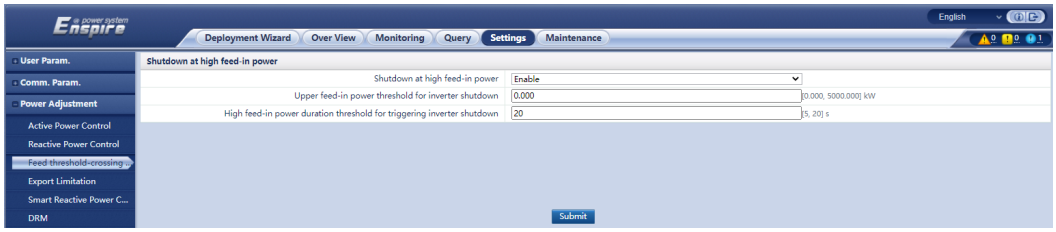

----End

Shutdown at high feed-in power

Parameter	Description
Shutdown at high feed-in power	• The default value is **Disable**. • If this parameter is set to **Enable**, the inverter shuts down for protection when the grid-connection point power exceeds the threshold and remains in this condition for the specified time threshold.
Upper feed-in power threshold for inverter shutdown	• Upper limit: **5000** • Lower limit: – If **Maximum grid feed-in power** is set to a negative value, the lower limit is **Maximum grid feed-in power**. – If **Maximum grid feed-in power** is set to a positive value, the lower limit is **0**.

Copyright © Huawei Technologies Co., Ltd.

Parameter	Description
High feed-in power duration threshold for triggering inverter shutdown	The default value is **20**. This parameter specifies the duration threshold of high feed-in power for triggering inverter shutdown. ● When **High feed-in power duration threshold for triggering inverter shutdown** is set to 5, **Shutdown at high feed-in power** takes precedence. ● When **High feed-in power duration threshold for triggering inverter shutdown** is set to **20**, **Export Limitation(kW)** takes precedence (when **Active power control mode** is set to **Export Limitation(kW)**).

6.8.5 Setting Export Limitation Parameters

Context

When the PV and energy storage plant generates power for self-consumption, reverse current may feed into the power grid if the loads cannot consume all the power. In this case, you can set the export limitation parameters on the WebUI to prevent reverse current.

- Scenario without a circuit breaker: The reverse current feeding into the power grid can be eliminated by sending a command from the SmartLogger to adjust the inverter/Smart PCS output power.

Figure 6-51 Network diagram (without a circuit breaker)

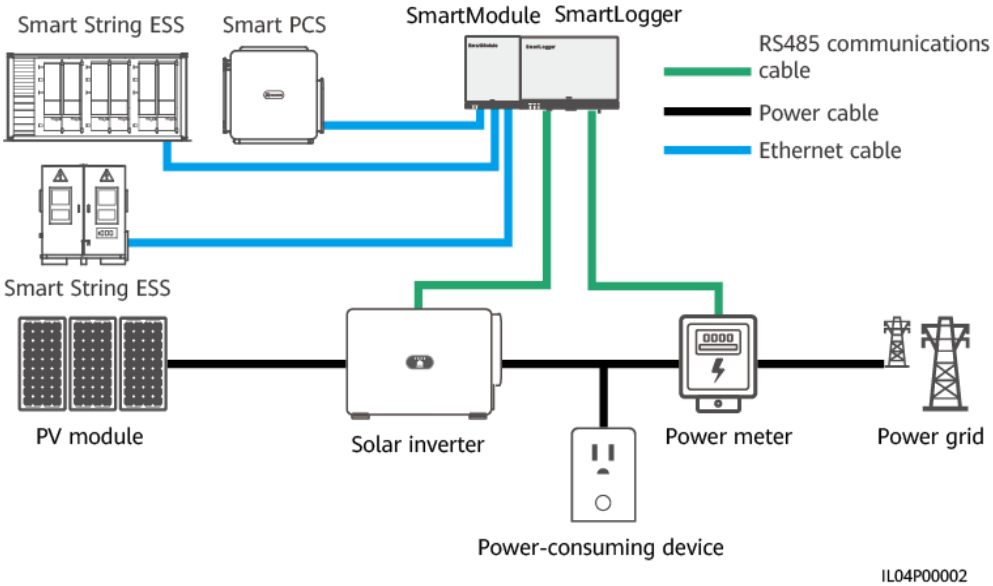

- Scenario with a circuit breaker: When the reverse current feeding into the power grid cannot be eliminated by sending a command from the SmartLogger to adjust the inverter or Smart PCS output power, and

Copyright © Huawei Technologies Co., Ltd.

Maximum protection time is exceeded, the SmartLogger controls the DO port to drive the relay to switch off the circuit breaker. When the DI port detects that the circuit breaker is switched off, the DO port and relay on the SmartLogger will be switched off, and the SmartLogger will restore to the initial state.

NOTE

Connect the DO ports in series to the 12 V power supply loop of the relay coils. You are advised to use the 12 V output power port on the SmartLogger to power the relay coils. You can also prepare a 12 V power supply.

Figure 6-52 Network diagram (with a circuit breaker)

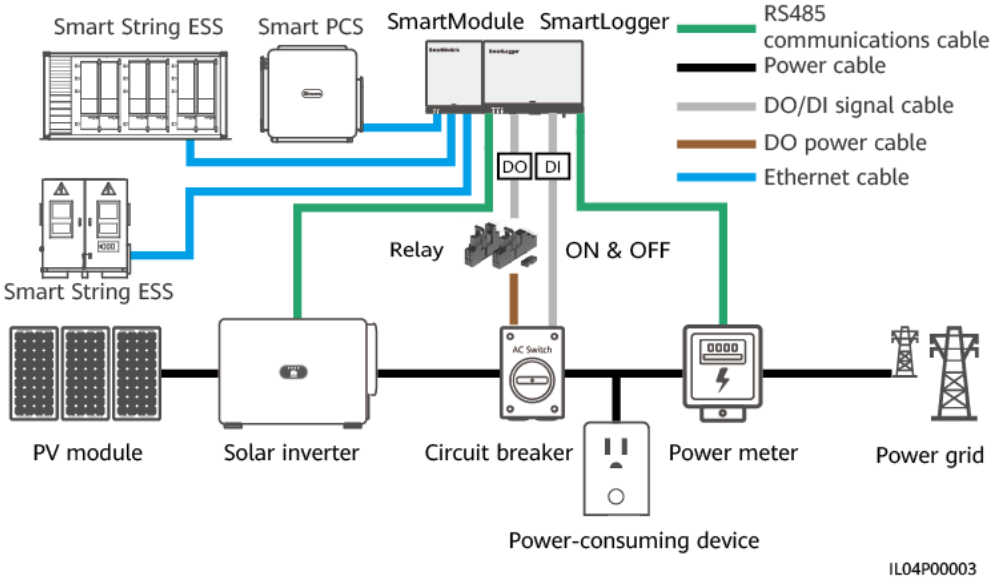

CAUTION

In the scenario with a circuit breaker, place the power supply to the SmartLogger at the upstream of the circuit breaker to avoid the SmartLogger power-off after the DO port switches off the circuit breaker.

Procedure

Step 1 Set parameters as prompted. For details, click **Help** on the page.

NOTE

- Click **Previous** and **Next** as required.
- For details about how to set meter parameters, see **6.3.16.2 Setting Modbus-RTU Meter Parameters**.
- Parameters for feed-in at limited power can be set only after a feed-in meter is configured.

 Copyright © Huawei Technologies Co., Ltd.

Figure 6-53 Setting export limitation parameters

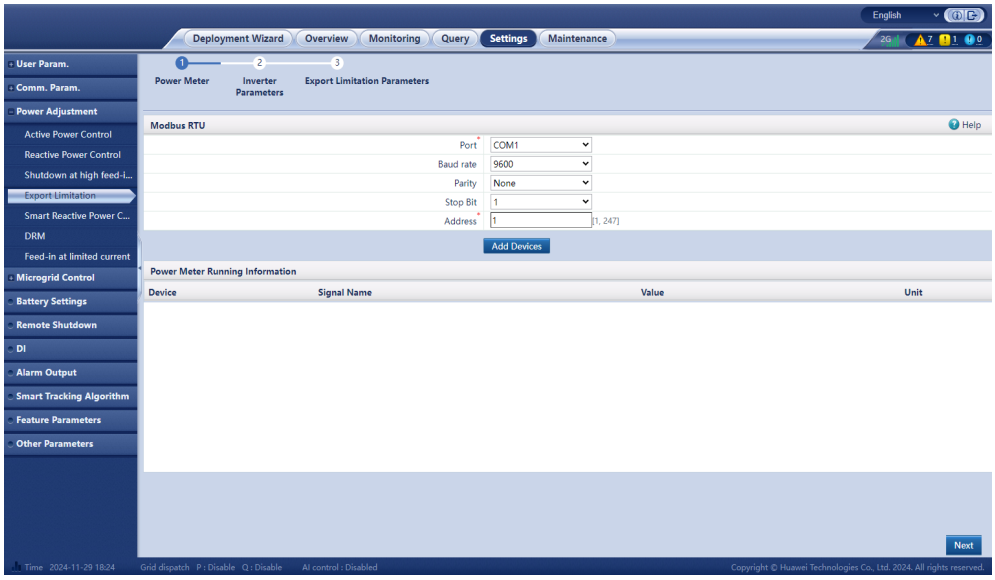

----End

6.8.6 Setting Parameters for Smart Reactive Power Compensation

Context

The smart reactive power compensation algorithm obtains the power data of the power meter at the grid-connection point through the SmartLogger, performs intelligent algorithm analysis, adjusts the reactive output power of the inverter or Smart PCS, optimizes the power factor of the grid-connection point, and reduces or avoids power factor charge to increase the energy yield of the plant.

NOTE

- Before setting the parameters, ensure that the inverter or Smart PCS is connected to the SmartLogger.
- If a power meter is connected to the SmartLogger, the power meter access procedure in the wizard is only used as a check guide. If no power meter is connected to the SmartLogger, add a power meter by following the wizard.
- For versions earlier than SmartLogger V300R023C00SPC160, before setting the parameters, ensure that the license for smart reactive power compensation has been loaded on the **Maintenance** > **License Management** page.

Procedure

Step 1 Set parameters as prompted. For details, click **Help** on the page.

 Copyright © Huawei Technologies Co., Ltd.

Figure 6-54 Setting parameters for smart reactive power compensation (scenario selection)

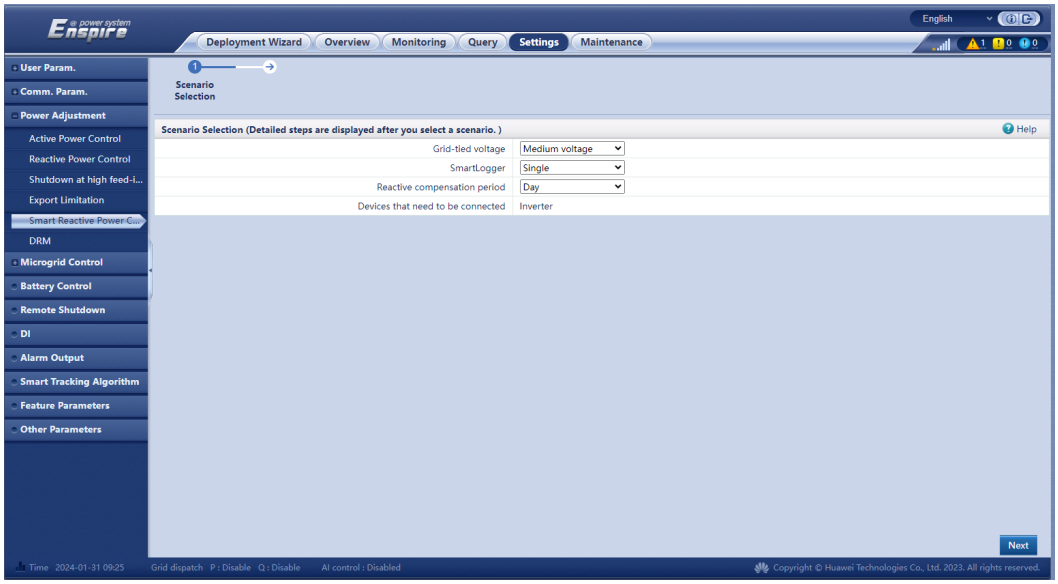

NOTICE

When the SmartLogger receives a remote reactive power scheduling command from the plant, it automatically changes **Reactive power control mode** to **Remote communication scheduling**. If power factor closed-loop control is required, set **Reactive power control mode** to **Power factor closed-loop control** and set the target power factor correctly.

NOTE

For details about the running parameters of power meters, see **6.3.16.2 Setting Modbus-RTU Meter Parameters**.

 Copyright © Huawei Technologies Co., Ltd.

Figure 6-55 Setting parameters for smart reactive power compensation (power meter)

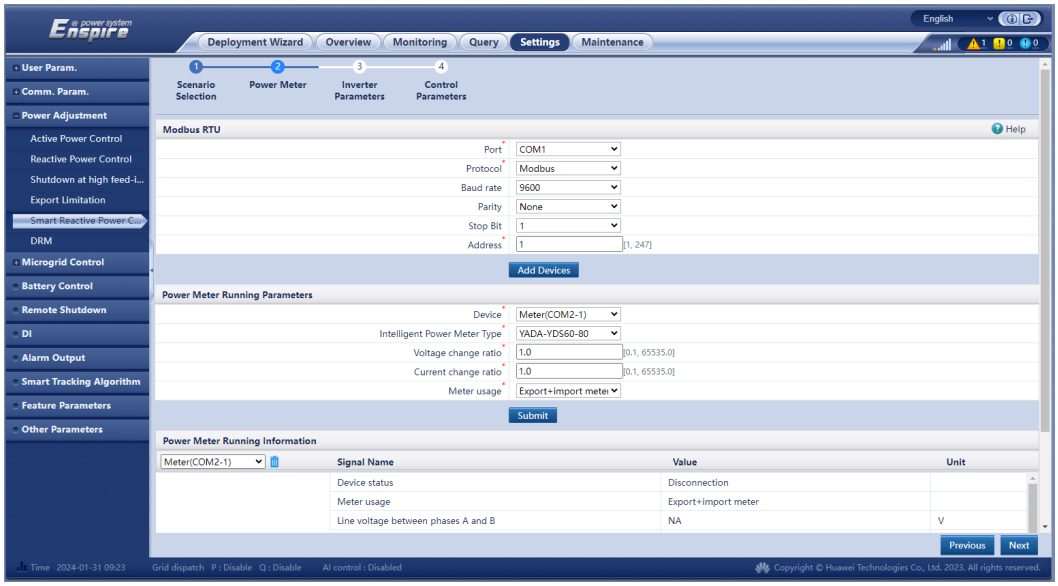

----End

6.8.7 Setting DRM Parameters

Context

According to Australian standards, the inverters must pass the Demand Response Modes (DRM) certification.

Figure 6-56 Wiring diagram for the DRM function

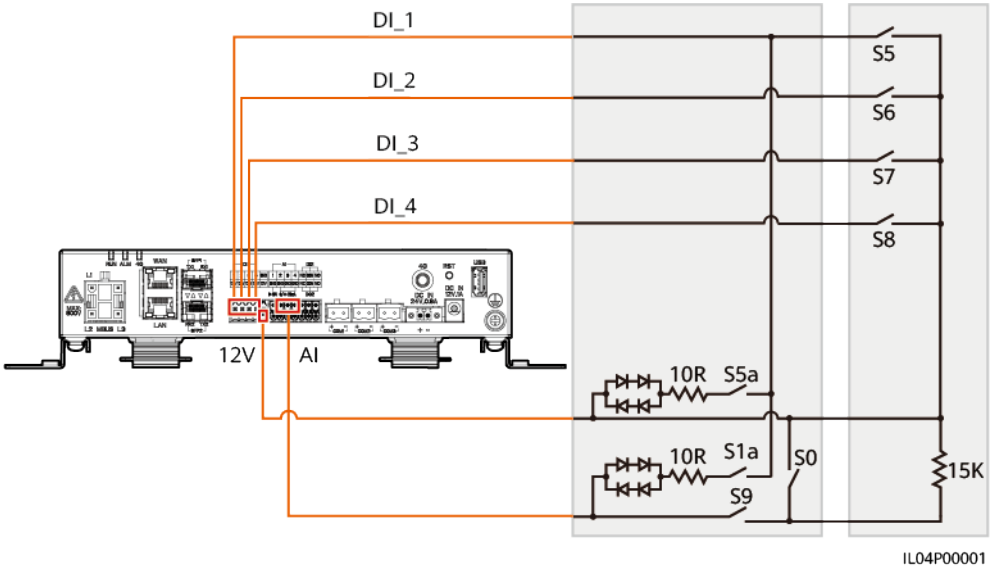

Copyright © Huawei Technologies Co., Ltd.

Table 6-38 DRM requirements

Mode	SmartLogger Port	Requirement	Remarks
DRM0	AI2–AI4	● When S0 is turned on, the inverters shut down. ● When S0 is turned off, the inverters are connected to the power grid.	-
DRM5	DI1	When S5 is turned on, the inverters do not output active power.	When two or more DRM modes are used at the same time, the strictest requirement must be met.
DRM6	DI2	When S6 is turned on, the output active power of the inverters does not exceed 50% of the rated power.	
DRM7	DI3	When S7 is turned on, the output active power of the inverters does not exceed 75% of the rated power, and the inverters consume the maximum reactive power.	
DRM8	DI4	When S8 is turned on, the output active power of the inverters recovers. **NOTE** The inverters output active power based on the percentage set on the SmartLogger.	

Procedure

Step 1 Choose **Settings** > **Power Adjustment** > **Active Power Control** to check the **Active power control mode**.

- When setting DRM0 parameters, you can set **Active power control mode** to any value.
- When setting DRM5–DRM8 parameters: Set **Active power control mode** to **No limit**.

Step 2 Choose **Settings** > **Power Adjustment** > **Reactive Power Control** and ensure that **Reactive power control mode** is set to **No output**.

Step 3 Choose **Settings** > **Remote Shutdown** and ensure that **Access port** is set to **No**.

Step 4 Set DRM parameters and click **Submit**.

 Copyright © Huawei Technologies Co., Ltd.

Figure 6-57 Setting DRM parameters

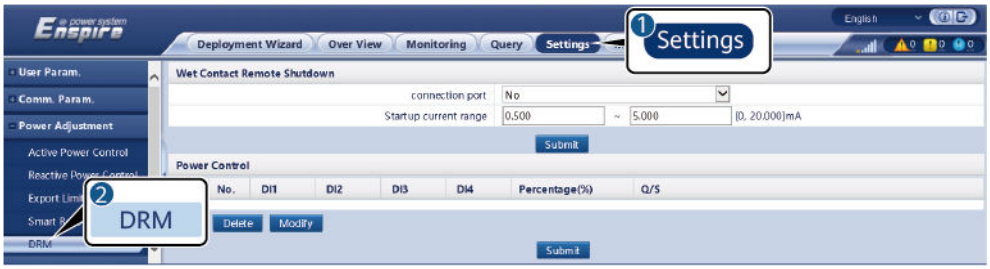

IL04J00015

Parameter	Description
connection port	Set the parameter to the AI port for DRM signals.
Startup current range	If the current of the AI port is within the setting range, inverters are turned on. Otherwise, inverters are turned off.
Power Control	Set DI parameters based on the DRM requirements.

----End

6.8.8 Setting Remote Shutdown

6.8.8.1 Setting Dry Contact Remote Shutdown

Context

The SmartLogger has four DI ports, and the OVGR can connect to any DI port. The SmartLogger shuts down the inverter over OVGR signals.

 Copyright © Huawei Technologies Co., Ltd.

Figure 6-58 Networking

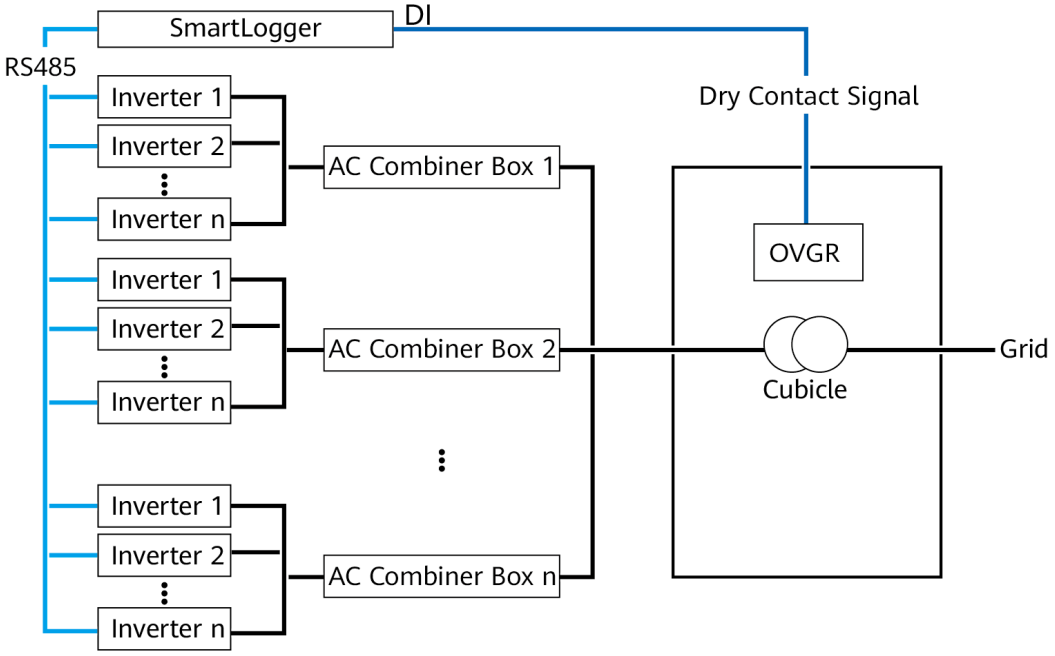

NOTICE

When setting this function, ensure that the user-defined DI port is not occupied. Otherwise, the setting will fail.

Procedure

Step 1 Set dry contact remote shutdown parameters.

Figure 6-59 Dry contact remote shutdown

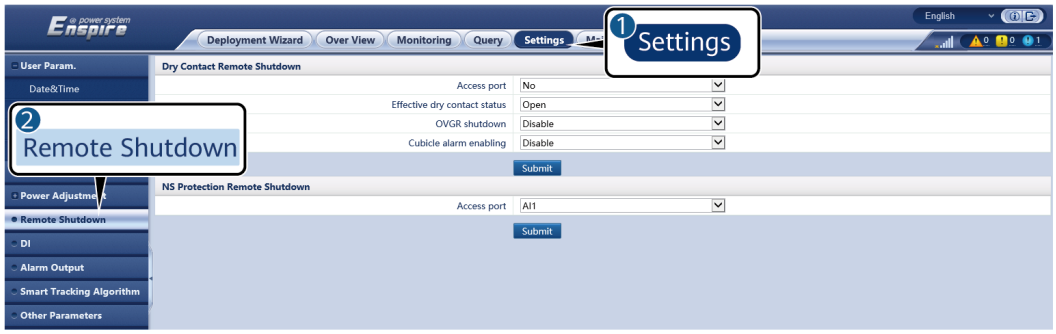

Parameter	Description
Access port	Set the parameter to the DI port connected to OVGR signals.

 Copyright © Huawei Technologies Co., Ltd.

Parameter	Description
Effective dry contact status	The value can be **Open** or **Close**. **NOTE** If OVGR shutdown is enabled and this parameter is set to **Close**, the SmartLogger sends an inverter shutdown command only when the corresponding DI port is in the **Close** state.
OVGR shutdown	Specifies whether to enable shutdown over OVGR.
Cubicle alarm enabling	If this parameter is set to **Enable**, the **Abnormal Cubicle** alarm is generated when the dry contact signal is effective and the Cubicle is abnormal.

----End

6.8.8.2 Setting NS Protection Remote Shutdown

Context

- The NS protection function applies to areas complying with the VDE 4105 standard. Choose **Monitoring > Running Param. > Grid Parameters** and set **Grid Code** to **VDE-AR-N-4105** or **SWITZERLAND-NA/EEA:2020-LV230**.
- The NS protection device is connected to the AI1 port and 12V output power port. The SmartLogger shuts down the inverter over the voltage change detected at the AI1 port. When the NS protection device is disconnected, the AI1 port voltage is 0 V, and the inverter shuts down. When the NS protection device is connected again, the voltage of the AI1 port is 12 V and the inverter automatically starts.

Figure 6-60 Networking

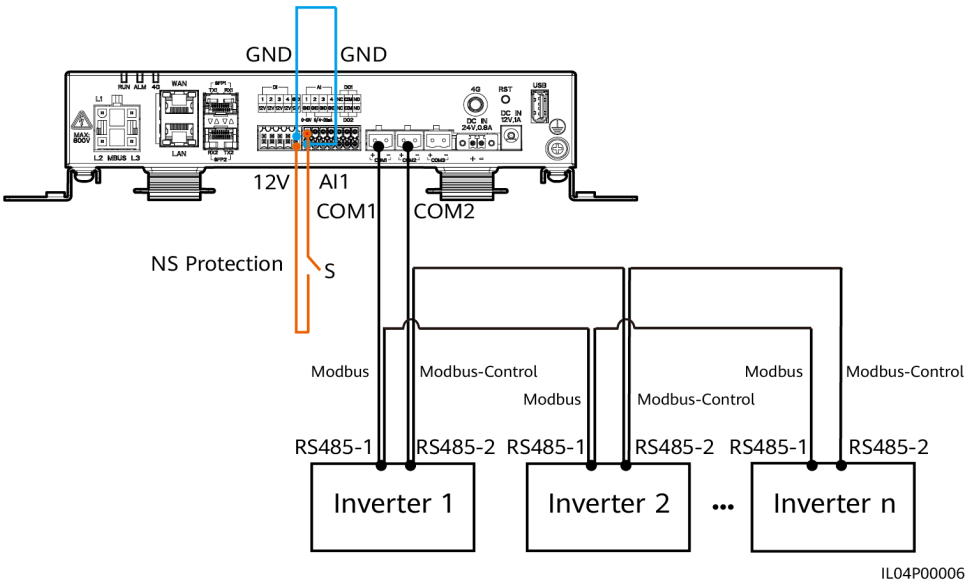

Copyright © Huawei Technologies Co., Ltd.

Procedure

1. Set NS protection remote shutdown parameters.

Figure 6-61 NS protection remote shutdown

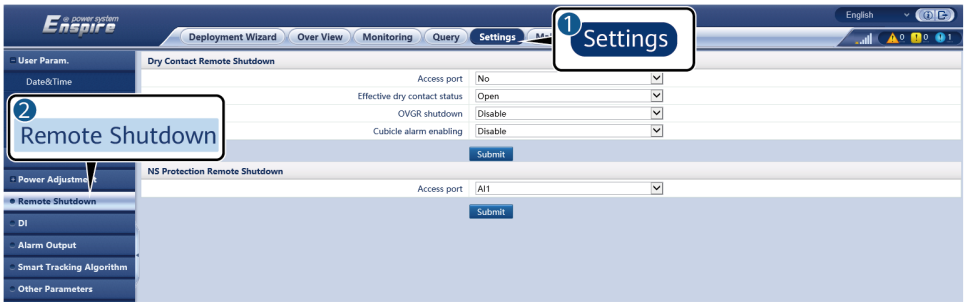

IL04J00010

Parameter	Description
Access port	Set the parameter to AI1 port connected to AI signals. The SmartLogger shuts down the inverter over the voltage change detected at the AI1 port.

2. Set the protocol type of the RS485 communications parameters. **Protocol** of the COM1 port is set to **Modbus** by default, and that of the COM2 port should be set to **Modbus-Control**. Set **Baud rate**, **Parity**, **Stop Bit**, **Start address**, and **End address** based on the actual situation.
   a. If only one inverter is connected to the SmartLogger, connect the COM1 port on the SmartLogger to the RS485-1 port on the inverter, and connect the COM2 port on the SmartLogger to the RS485-2 port on the inverter.
   b. If inverters are cascaded, connect the COM1 port on the SmartLogger to the RS485-1 port on the inverter, and connect the COM2 port on the SmartLogger to the RS485-2 port on the inverter. Connect the RS485-1 and RS485-2 ports on one inverter to the RS485-1 and RS485-2 ports on the other inverter, respectively.

   NOTE

   Because there are many types of inverters, the RS485-1 port may be named RS485_1, 485B1, or 485A1. The RS485-2 port may be named RS485_2, 485B2, or 485A2.

Figure 6-62 Setting RS485 parameters

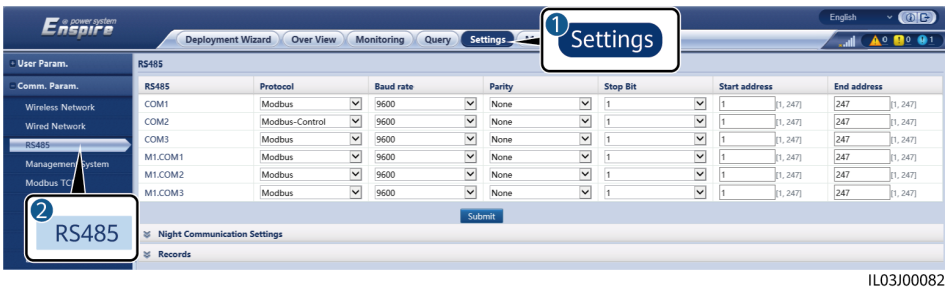

IL03J00082

 Copyright © Huawei Technologies Co., Ltd.

6.8.9 Setting Feed-in at Limited Current

- These parameters can be configured only for SmartLogger V300R023C10SPC550 and later versions and apply only to the C&I scenarios in the United Kingdom.
- Parameters for feed-in at limited current can be set only after a feed-in meter is configured.
- To use the **Feed-in at limited current** function, at least one of the following conditions must be met:
  - The active power control mode is **No limit** or **Export Limitation(kW)**.
  - The battery control working mode is **No control**, **Maximum self-consumption**, or **TOU**.
  - Power boost limit for battery control is configured.
  - Peak shaving for battery control is configured.

Procedure

Choose **Settings** > **Power Adjustment** > **Feed-in at limited current**. Click **Previous** and **Next** as required.

NOTE

For details about how to set meter parameters, see **Setting Modbus-RTU Meter Parameters**.

1. Set inverter or Smart PCS parameters and click **Batch configurations**.

Description	Description
Communication disconnection fail-safe	If this parameter is set to **Enable**, the inverter or Smart PCS performs protection based on the preset power when its communication with the SmartLogger is interrupted for a period longer than **Communication disconnection detection time**.
Active power limit when communication fails (%)	Set this parameter to **0.0**.
Communication disconnection detection time (s)	Set the duration threshold to **5**s for determining the communication disconnection between the inverter or Smart PCS and the SmartLogger or Smart Dongle.

2. Set parameters for feed-in at limited current and click **Submit**.

Copyright © Huawei Technologies Co., Ltd.

Parameter	Description	Remarks
Feed-in at limited current	The default value is **Disable**. ● If this parameter is set to **Disable**, feed-in at limited current will be unavailable. ● If this parameter is set to **Enable**, feed-in at limited current will be available.	If the feed-in current exceeds **Max. feed-in current(A)** for 15 seconds, the device will shut down and an alarm will be reported. After the device has been shut down for 4 hours, manually restart the device to restore feed-in at limited current. The alarm will be automatically cleared.
Max. feed-in current(A)	Set the maximum current fed to the grid at the grid connection point.	These parameters are displayed after **Feed-in at limited current** is set to **Enable**.
Max. grid supply current(A)	Set the maximum current supplied from the grid at the grid connection point.	

Copyright © Huawei Technologies Co., Ltd.

7 Device Maintenance

7.1 Routine Maintenance

- Ensure that the SmartLogger is free from strong electromagnetic interference.
- Ensure that the SmartLogger is away from heat sources.
- Regularly clean the SmartLogger.
- Regularly check that cables are secured.

7.2 Troubleshooting

No.	Fault	Cause	Suggestion
1	The SmartLogger cannot be powered on.	1. The DC output power cable for the power adapter is not connected the 12V IN port of the SmartLogger. 2. The power cable is not connected to the AC input power port of the power adapter. 3. The AC input power cable is not connected to the AC socket. 4. The power adapter is faulty. 5. The SmartLogger is faulty.	1. Connect the DC output power cable for the power adapter to the 12V IN port of the SmartLogger. 2. Check that the power cable is connected to the AC input power port of the power adapter. 3. Check that the power cable is connected to the AC socket. 4. Replace the power adapter. 5. Contact the dealer or Huawei technical support.

 Copyright © Huawei Technologies Co., Ltd.

No.	Fault	Cause	Suggestion
2	The SmartLogger cannot find any device.	1. The COM ports are not connected to devices, or the cables are loose, disconnected, or reversely connected. 2. The RS485 communications parameters are not correctly set, and the solar inverter address is beyond the search range preset on the SmartLogger. 3. The devices that cannot be detected automatically, such as the EMI and power meter, are not manually added. 4. There are devices with duplicate addresses. 5. The network port does not connect to any devices or the network cables are loose.	1. Check the RS485 cable connection. If the cable is loose, disconnected, or reversely connected, reconnect it firmly. 2. Check the RS485 communications parameter settings. Ensure that the baud rate and communication address are set correctly and that the solar inverter address is within the search range of the SmartLogger. 3. Manually add the devices that cannot be detected automatically, such as the EMI and power meter. 4. Addresses are automatically assigned to all devices to ensure that no duplicate address exists. Then restart the automatic search. 5. Check the network cable connection. If the cable is loose, reconnect it firmly. 6. Contact the dealer or Huawei technical support.
3	The communication for MBUS networking failed.	1. The solar inverter and SmartLogger do not support MBUS. 2. The AC power cable is loose, disconnected, or reversely connected. 3. The upstream circuit breaker for the AC power cable is turned off. 4. In MBUS networking, **Built-in MBUS** or **Networking** is set to **Disable**. 5. The SmartLogger is faulty.	1. Check whether the solar inverter and SmartLogger support MBUS. 2. Check the AC power cable. If it is loose, disconnected, or reversely connected, reconnect it firmly. 3. Check that the upstream circuit breaker for the AC power cable is turned on. 4. Set **Built-in MBUS** and **Networking** to **Enable**. 5. Contact the dealer or Huawei technical support.

Copyright © Huawei Technologies Co., Ltd.

No.	Fault	Cause	Suggestion
4	The device status is displayed as disconnected on the SmartLogger.	1. The cable between the solar inverter and the SmartLogger is loose or disconnected. 2. The solar inverter is powered off. 3. The baud rate or RS485 address of the solar inverter is changed. 4. The solar inverter is replaced. 5. The solar inverter is removed and not reconnected.	1. Check the communications cable and network cable between the device and the SmartLogger. If the cables are loose, reconnect them firmly. 2. Check the solar inverter connection and power on the solar inverter. 3. Check that the baud rate and RS485 address of the solar inverter are set correctly. 4. If any device is replaced, search for the device again or manually add the device. 5. If the device has been removed, perform the **Remove Devices** operation on the **Device Mgmt.** page.
5	The EMI fails in communication.	1. The RS485 communications cable between the EMI and the SmartLogger is connected incorrectly, loose, or disconnected. 2. The EMI is not powered on. 3. The EMI and SmartLogger use different RS485 communications parameter settings. 4. The EMI parameters are incorrectly set.	1. Check the cable connection. If the cable is loose or disconnected, reconnect it firmly. 2. Power on the EMI. 3. Check that the RS485 communications parameters of the EMI are correctly. 4. Log in to the WebUI and ensure that the EMI parameters are set correctly.
6	The SmartLogger cannot communicate with the management system.	1. The SmartLogger is not connected to the PC, or the cable is loose or disconnected. 2. The parameters of the wired or wireless network are incorrectly set. 3. The management system parameters are incorrectly set.	1. Check that the Ethernet port of the SmartLogger is correctly connected to the PC or a router. 2. Check that the parameters of the wired or wireless network are set correctly. 3. Check that the management system parameters are correctly set.

Copyright © Huawei Technologies Co., Ltd.

No.	Fault	Cause	Suggestion
7	The communication for RS485 networking failed.	1. The RS485 communications cable is incorrectly connected, loose, or disconnected. 2. The SmartLogger is not powered on. 3. The RS485 communications parameters are incorrectly set.	1. Terminal block connection: Check that the RS485 communications cable is connected to the correct port of the terminal block. 2. RJ45 network port connection: Check that the RJ45 connector is properly crimped and that each wire is connected to the correct pin. 3. Check that the RS485 ports of other devices are connected to the correct ports of the SmartLogger. 4. Check the RS485 cable connection. If the cable is loose, disconnected, or reversely connected, reconnect it firmly. 5. Power on the SmartLogger and its connected device. 6. Check the RS485 communications parameter settings. 7. Contact the dealer or Huawei technical support.
8	The 4G communication is abnormal.	1. The SIM card is not inserted or it is in arrears or damaged. 2. The 4G antenna is not tightened or is damaged. 3. The management system parameters and wireless network parameters are incorrectly set. 4. The SIM card registration failed.	1. Insert or replace the SIM card. 2. Tighten or replace the 4G antenna. 3. Check that the management system parameters and wireless network parameters are set correctly. 4. Contact the SIM card carrier or Huawei technical support.

Copyright © Huawei Technologies Co., Ltd.

No.	Fault	Cause	Suggestion
9	An EMI fails to be added over the AI port (another device has already been connected to the port).	1. A device with the same communications address has been connected to the MBUS port. 2. Duplicate addresses are not allowed.	1. Choose **Maintenance** > **Device Mgmt.** > **Connect Device** > **Auto Assign Address** or **Maintenance** > **Device Mgmt.** > **Device List** > **Modify Device Info** to modify the communications address of the device with the same address connected to the MBUS port, and then add the EMI again. 2. Change the communications address of the EMI and add it again.

7.3 Alarm Reference

For details about alarms, see **SmartLogger3000 Alarm Reference**.

7.4 WebUI Maintenance Operations

7.4.1 Software Upgrade

Context

You can upgrade the software of the SmartLogger, inverter, Smart PCS, Smart String Grid Forming ESS, MBUS module, or PID module on the WebUI.

Procedure

Step 1 Choose **Maintenance** > **Software Upgrade**. The **Software Upgrade** page is displayed.

Step 2 Upload the software upgrade package and click **Software Upgrade**. Contact the Company's engineers to obtain the software upgrade package.

Figure 7-1 Software upgrade

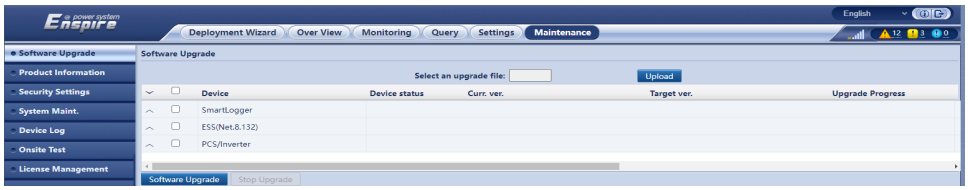

 Copyright © Huawei Technologies Co., Ltd.

NOTE

- Before upgrading the PCS and inverter, ensure that the DC side is powered on.
- For SmartLogger V300R024C10 and later versions, the size of the file to be uploaded must be less than 80 MB. Otherwise, the page will be abnormal.
- SmartLogger V300R023C10 and later versions support one-click upgrade of different types of devices after the software package is uploaded.
- The **Stop Upgrade** function applies only to the devices waiting to be upgraded.
- If the active power control mode is set to **Grid connection with limited power** or **Remote communication scheduling**, and the reactive power control mode is set to **Power factor closed-loop control** or **Working mode** in **Battery Settings** is not set to **No control**, you are advised to upgrade the software when inverters and Smart PCSs are disconnected from the grid. Otherwise, power control may be abnormal or the upgrade may fail.
- If the system displays a message indicating that the digital signature verification of the upgrade package fails when you upload the PCS upgrade package, you can restore the SmartLogger to factory settings to clear the fault. Before restoring the SmartLogger to factory settings, export all configuration files by referring to section "Full profile export/import" in the *SmartLogger V300R024C10 Security Maintenance Manual*. After factory settings are restored, import all configuration files.
- When the SmartLogger is being upgraded, its control functions may become invalid, which may cause consequences such as abnormal power control or on/off-grid switching failure.
- If the device version rollback fails, the **Anti-rollback** function of the device has been set to **Enable**. Set **Anti-rollback** to **Disable** and try again.

----End

7.4.2 Security Settings

Figure 7-2 Security settings

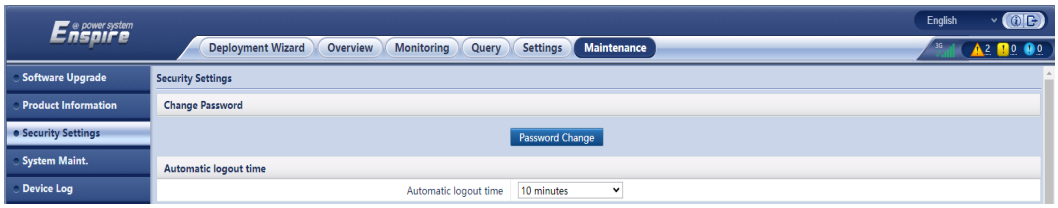

Parameter	Description
Change Password	Change the password for the current login user to log in to the WebUI.
Automatic logout time	After this parameter is set, a user is automatically logged out if the user does not perform any operation within the period specified by this parameter.
WebUI Security Certificate	You are advised to use the existing network security certificate and key. If the browser displays the "ERR_SSL_SERVER_CERT_BAD_FORMAT" error, use another browser (such as Firefox) or replace the certificate.
Update Key	Specifies the key update interval.

Copyright © Huawei Technologies Co., Ltd.

Parameter	Description
User Lockout	Set **Detection period**, **Maximum login attempts**, and **Lockout duration**.
Certificate Alarm Time	• **Test interval**: specifies the interval for checking whether a digital certificate is about to expire. • **Early-warning time**: specifies the time when a warning is generated before a digital certificate expires.
Module Security Certificate	Load the network security certificate of the module. If the private key file has a password, select **Enable key password** and enter the key password obtained from the certificate provider.
Communication Settings	Specifies whether to enable communication using an expired certificate. If this parameter is set to **Enable**, the SmartLogger can communicate with the SmartModule. After the certificate expires, set this parameter to **Disable** to prevent the SmartLogger from communicating with the SmartModule to ensure network security.
South Equip Security Certificate	Load the security certificate of southbound equipment. If the private key file has a password, select **Enable key password** and enter the key password obtained from the certificate provider.
WEB TLS Setting[1]	Enables or disables the TLS 1.0 and 1.1 function.
Intrusion Detection	If this parameter is set to **Starting up**, when intrusion events such as abnormal user login and key file tampering are detected, you can choose **Query > Security Events** to query the exception records.
Service Management	Starts or stops Modbus remote communication networking.
Anti-rollback	The default setting is **Enable**. • **Enable**: Enable the anti-rollback function. • **Disable**: Disable the anti-rollback function. When this parameter is set to **Disable**, a dialog box **Disabling the anti-rollback function does not restrict the rollback of the software version. The rollback may cause historical problems. Are you sure you want to continue?** is displayed. If you click **Confirm**, the submission continues. If you click **Cancel**, the submission is canceled.
Note [1]: This parameter can be set only for V300R001C00 version.	

 Copyright © Huawei Technologies Co., Ltd.

7.4.3 System Maintenance

Figure 7-3 System maintenance

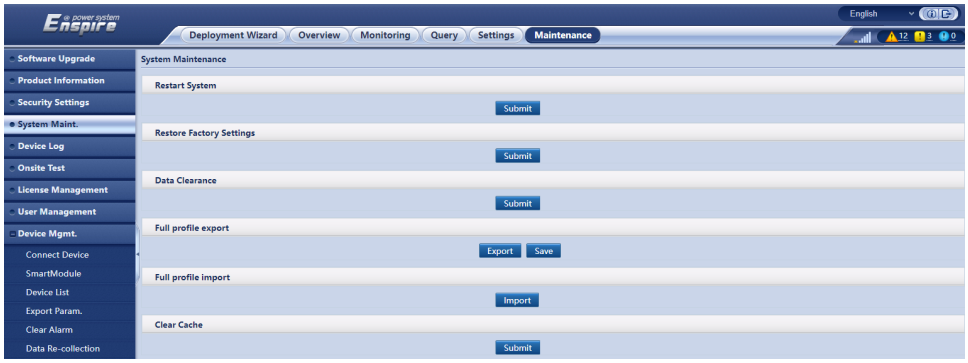

Function	Description
Restart System	Resets the SmartLogger, which will automatically shut down and restart.
Restore Factory Settings	• Only accounts with the administrator permission (**installer**) can restore the factory settings. • After the factory settings are restored, all configured parameters (except the current date, time, and communication parameters) are restored to their factory default values. The running information, alarm records, and system logs are not changed. Exercise caution when deciding to perform this operation.
Data Clearance	Clears all historical data of the SmartLogger.
Full profile export	Before replacing the SmartLogger, export the SmartLogger configuration file to a local PC.
Full profile import	After replacing the SmartLogger, import the local configuration file to the new SmartLogger. After the import is successful, the SmartLogger restarts for the configuration file to take effect. Ensure that the parameters on the **Settings** tab page and the parameters for the built-in MBUS are correctly set.
Clear Cache	You can clear the temporary files and upgrade package files stored on the SmartLogger through **Clear Cache**.
Clear User Data	Clears user data and restarts the device. You need to log in again after the restart. **CAUTION** Clearing user data will delete all data in the system. Exercise caution when performing this operation.

Copyright © Huawei Technologies Co., Ltd.

Function	Description
Flash Statis Info export	Exports information about the number of flash erasing times.
Version rollback	Rolls back the SmartLogger version. Version rollback may affect the use of some functions. Exercise caution when performing this operation.
Deletes the topology file.	Deletes topology information.

7.4.3.1 Exporting Full Configuration Files

Procedure

1. Choose **Maintenance > System Maint.** and click **Export** under **Full profile export**.

   NOTE

   During the export of the full configuration files, you need to enter **Password of the current user** and set **Encryption password of the exported file** in the **Re-authentication** dialog box.

   Figure 7-4 Exporting full configuration files

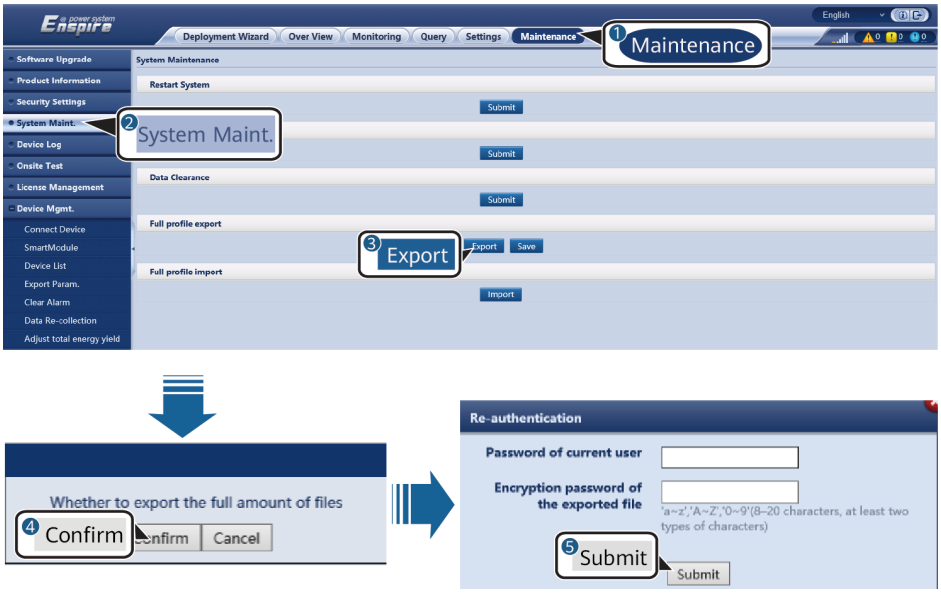

2. After the export is successful, click **Confirm**. Click **Save** under **Full profile export** to save the full configuration files.

Copyright © Huawei Technologies Co., Ltd.

7.4.3.2 Importing Full Configuration Files

Procedure

1. Choose **Maintenance** > **System Maint.** and click **Import** under **Full profile import**.

   NOTE

   During the import of the full configuration files, you need to enter **Password of the current user** and **Decryption password of the imported file** in the **Re-authentication** dialog box.

   NOTICE

   - If **Encryption password of the exported file** has not been set for the exported full configuration files, deselect **Decryption password of the imported file** in the **Re-authentication** dialog box when importing the files.
   - If **Encryption password of the exported file** has been set for the exported full configuration files, you need to set **Decryption password of the imported file** in the **Re-authentication** dialog box when importing the files.
   - When a faulty SmartLogger3000 is replaced, certificate-related files are not exported. After the full configuration files are imported, you need to reload a third-party certificate if required.

   Figure 7-5 Importing full configuration files

2. Click **Choose File**, select all exported files, and click **Import**.

Copyright © Huawei Technologies Co., Ltd.

7.4.4 Device Log

Procedure

Step 1 Access the device log page.

Figure 7-6 Exporting logs

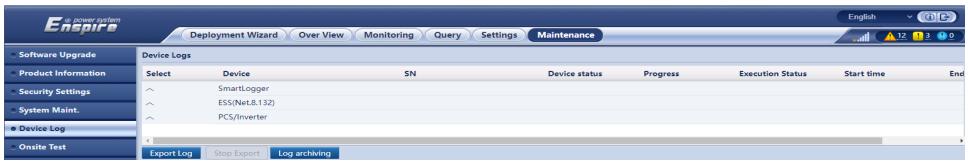

Step 2 Select the device whose logs are to be exported and click **Export Log**.

NOTE

- Logs of two or more types of devices cannot be exported at a time. For example, you cannot select both **SUN2000** and **MBUS**.
- ESS log: Select an ESS and click **Export Log**. In the dialog box that is displayed, select **Battery logs**. You can click the plus sign to select batteries.
- If the active power control mode is set to **Grid connection with limited power** or **Remote communication scheduling**, and the reactive power control mode is set to **Power factor closed-loop control** or **Working mode** in **Battery Settings** is not set to **No control**, you are advised to export logs when inverters and Smart PCSs are disconnected from the grid. Otherwise, power control may be abnormal or the log export may fail.
- For an STS connected over RS485, only performance data can be exported, and device logs cannot be exported.

Step 3 Observe the progress bar and wait until the log export is complete.

Step 4 For versions earlier than V300R023C10SPC200, when the export is successful, click **Log archiving** to save the logs. In V300R023C10SPC200 or later, if the export is successful, the file is automatically saved to the default download location of the browser. You can specify a download location by changing the default one of the browser.

----End

7.4.5 Onsite Test

Context

After an inverter and PCS are put into use, you need to periodically check their health to detect potential risks and problems.

NOTE

Only the PCS whose model is LUNA2000-213KTL-H0 supports the inspection function.

Procedure

Step 1 Start an onsite test.

Copyright © Huawei Technologies Co., Ltd.

Figure 7-7 Onsite test

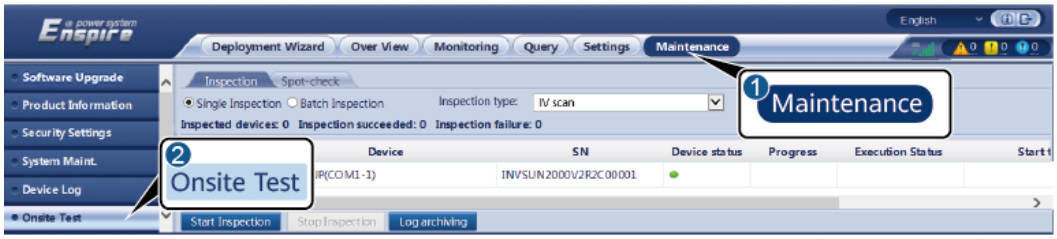

IL03J00041

Tab	Function	Description
Inspection	Check the health of the inverter and PCS.	1. If **Single Inspection** is selected, select the device to be inspected. If **Batch Inspection** is selected, you do not need to select a device. 2. Set **Inspection type**. 3. Click **Start Inspection**. 4. Observe the progress bar and wait until the inspection is complete. 5. After the inspection is successful, click **Log archiving** to download the inspection log.
Spot-check	Start a spot-check. **NOTE** The spot-check function is available only for an inverter whose grid code is set to the Japanese standard.	1. Select the device to be spot-checked. 2. Click **Start Spot-Check**. 3. Perform a spot-check test onsite. 4. After the spot-check test is complete, click **Stop Spot-Check**.
Alarm Test	Simulates an inverter alarm. **NOTE** Only the SUN2000-63KTL-JPH0, SUN2000-50KTL/63KTL-JPM0, and SUN2000-125KTL-JPH0 support the alarm test function.	1. Choose **Device model** > **Device** name to select the device for which the alarm test is to be performed. 2. Click an alarm name to deliver an alarm command. The alarm icon is green by default and turns red after the command is delivered. 3. Click **Clear Alarm** to clear all alarms of the SUN2000-63KTL-JPH0, SUN2000-50KTL/63KTL-JPM0, and SUN2000-125KTL-JPH0. **NOTE** After the alarm is cleared, the SmartLogger collects alarm data again.
Network Test	Tests whether the network is connected.	1. Enter a valid IP address or domain name in the Ping area. 2. Enter the number of data sending times. 3. Click **Start**.

 Copyright © Huawei Technologies Co., Ltd.

----End

7.4.6 License Management

Context

- The Smart I-V Curve Diagnosis, Smart Tracker Control Algorithm (SDS), smart insulation detection, smart on/off-grid switching, smart microgrid control software, and smart grid forming feature – on-grid can be used only after licenses are purchased.
- The license files for Smart I-V Curve Diagnosis and smart string monitoring are stored in the inverter. The license file for smart insulation monitoring is stored in the PID module. The license files for SDS, smart on/off-grid switching, smart microgrid control software, and smart grid forming feature – on-grid are stored in the SmartLogger. Each license uniquely matches a device SN.
- License management allows you to view the license information and obtain the current license status. Before a device is replaced, the current device license needs to be revoked so that a revocation code can be generated and used for applying for a new device license.
- The size of the license file imported to the SmartLogger must be less than 1 MB. Otherwise, the page will be abnormal.

Table 7-1 License

License Name	License Description
Smart I-V Curve Diagnosis	This license allows the inverter to detect the I-V data of PV strings in real time, identifying potential faults.
Smart PV string monitoring	This license allows the inverter to monitor and manage key parameters of PV strings in real time.
Smart tracking algorithm	This license allows the SmartLogger to use algorithms that dynamically adjust parameters such as the tracker angle, improving energy yields.
Smart insulation monitoring	This license allows the PID module to monitor the ground insulation resistance of the system in real time and generate a warning, preventing power supply exceptions caused by grounding faults. It is optional for PV projects and mandatory for energy storage projects.
Smart on/off-grid switching	This license allows the PCS to switch to off-grid or on/off-grid mode.
Smart microgrid control software	This license allows the ESS to implement off-grid and on/off-grid functions in the microgrid scenario.

 Copyright © Huawei Technologies Co., Ltd.

License Name	License Description
Smart grid forming feature – on-grid	This license allows the ESS to implement grid forming in the on-grid scenario.

Procedure

Step 1 Access the **License Management** page.

Figure 7-8 License management

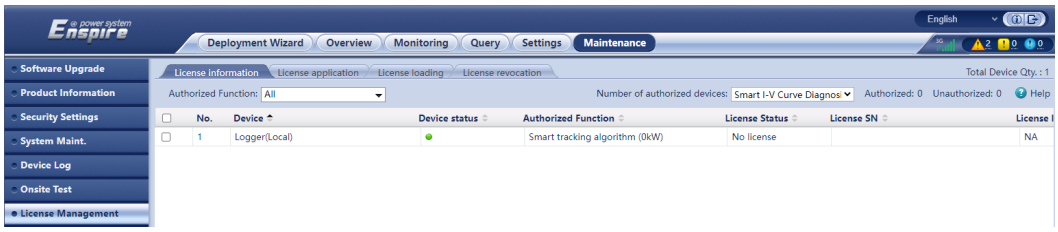

Tab	Function	Description
License information	Displays the license information.	1. Select the name of the device whose license details are to be exported. 2. Click **Export Details**.
License application	Exports the license application file.	1. Select the name of the device whose license is to be applied. 2. Click **Export License Appli File**. 3. Purchase a license from Huawei and obtain the license file from Huawei technical support engineers
License loading	Loads the obtained license to the corresponding device.	1. Click **Upload License**. 2. Select the name of the device whose license is to be loaded. 3. Click **Load License**.
License revocation	Revokes a license or exports the revocation code file.	1. Select the name of the device whose license is to be revoked. 2. Click **Revoke License**. 3. Click **Export Revo Code File**.

NOTE

When importing a license file, ensure that the file name extension is .dat or .zip.

----End

 Copyright © Huawei Technologies Co., Ltd.

7.4.7 Managing the SmartModule

Context

When replacing the SmartModule, you need to manually remove the device on the WebUI.

Procedure

1. Choose **Maintenance** > **Device Mgmt.** > **SmartModule**.
2. Select the device to be removed and click to remove it.

   NOTE

   is used to change the secondary authentication password of the SmartModule.

7.4.8 Managing Users

Context

- After the SmartLogger is upgraded from V300R001C00, **installer** has the administrator permission, and **admin** becomes an advance user.
- You can add, modify, and delete users after logging in as **installer**.

Procedure

Step 1 Add a user.

Figure 7-9 Adding a user

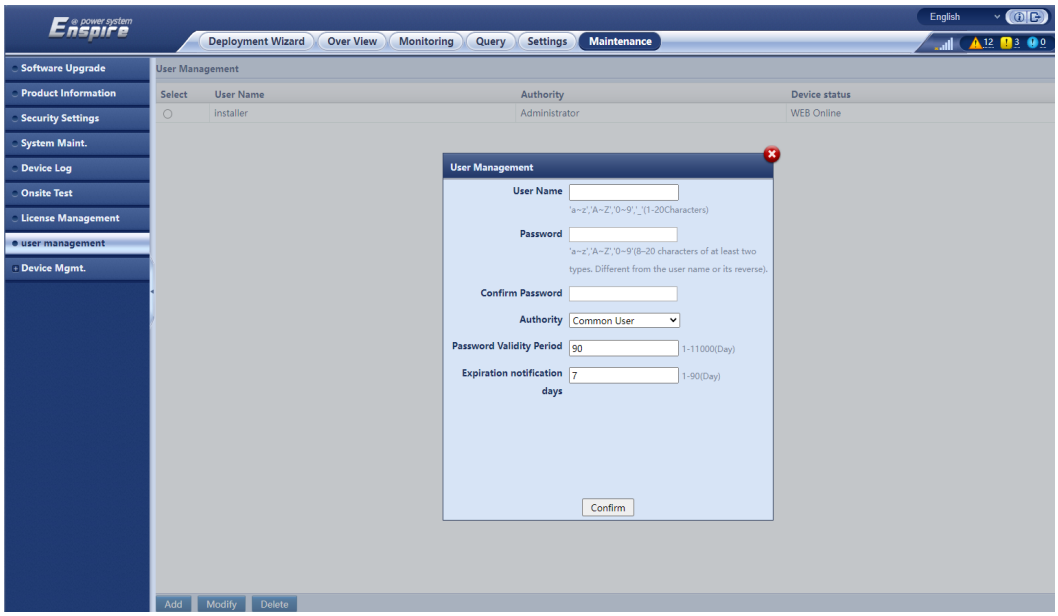

Step 2 Modify a user.

Copyright © Huawei Technologies Co., Ltd.

Figure 7-10 Modifying a user

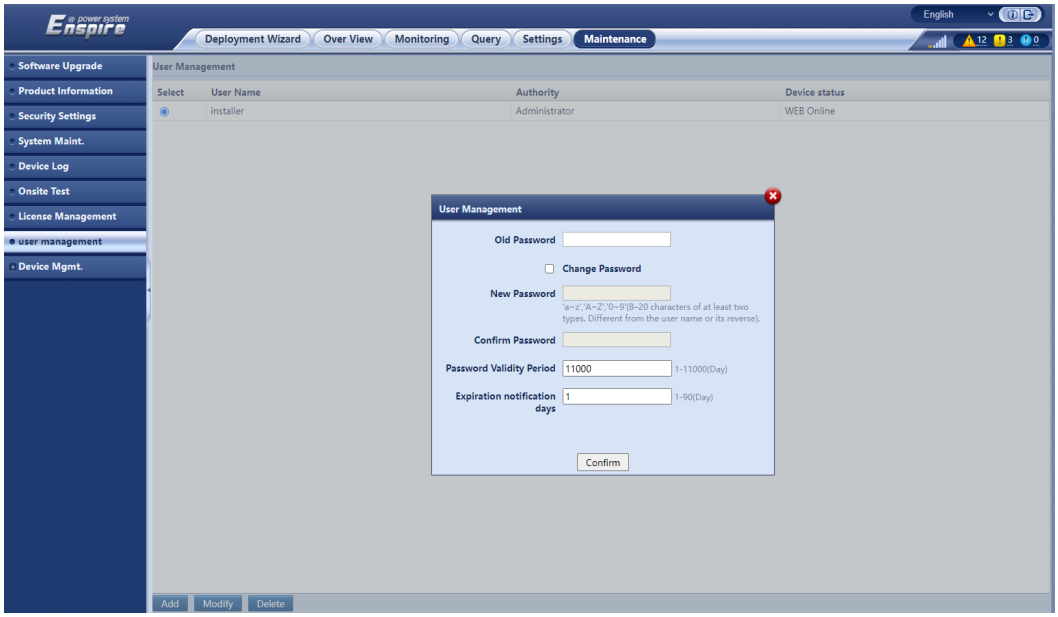

Step 3 Delete a user.

Figure 7-11 Deleting a user

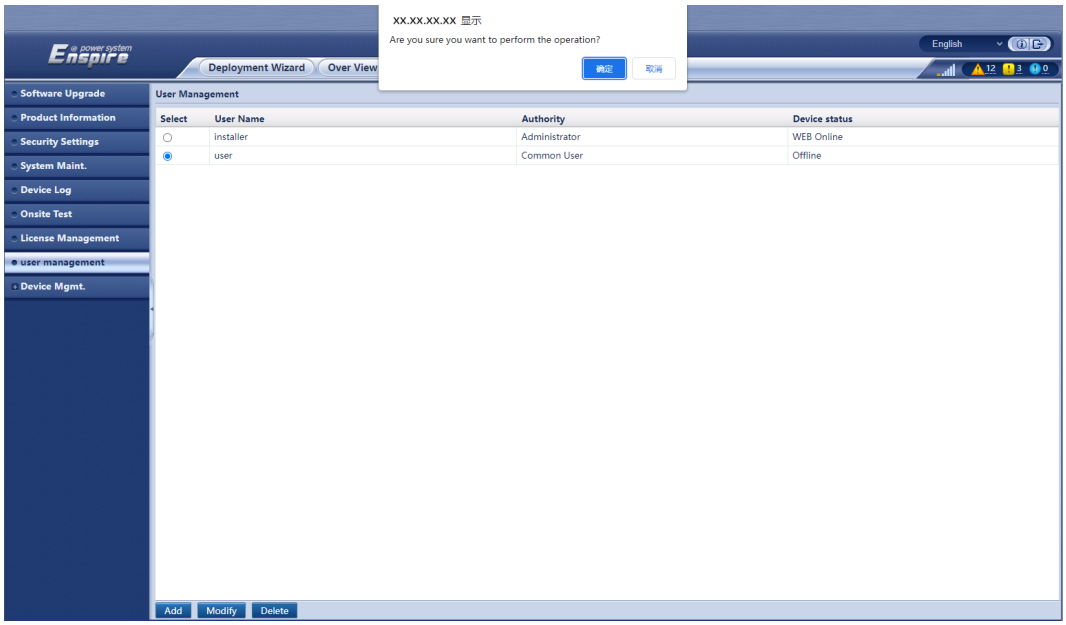

----End

7.4.9 Collecting Performance Data

Context

You can re-collect performance data of the solar inverter, Smart PCS, CMU, and ESU as well as daily, monthly, and yearly energy yields (also referred to as data re-collection).

 Copyright © Huawei Technologies Co., Ltd.

Procedure

Step 1 Choose **Maintenance** > **Device Mgmt.** > **Data Re-collection**.

Step 2 Select the type of the data to be collected and set the collection period.

Step 3 Select the name of the device whose data is to be collected and click **Collect Data**.

Step 4 Wait until all data is gathered. On the **Monitoring** page, query the collection result.

----End

7.4.10 Adjusting the Total Energy Yield

- SmartLoggerV300R001C00:
  a. Choose **Maintenance** > **Device Mgmt.** > **Adjust total energy yield**.
  b. Set **Adjust total energy yield(kWh)**, select the name of the device whose total energy yield needs to be adjusted, and click **Submit**.
- Other versions:
  a. Tap **Monitoring** and select the device whose total energy yield needs to be adjusted.
  b. Choose **Running Param** > **Electricity Revise**, set **Adjust total energy yield** and **Adjusted total power supply from grid**, and click **Submit**.

7.4.11 Force Start

This section does not apply to V300R001C00.

Context

- The force start function is mainly used in the scenario when the ESS needs to be forcibly started and then charged because it has been overdischarged before the initial deployment of the array. Before force start, ensure that the array is shut down.
- During the force start operation, each Smart PCS charges the ESS at 50 kW power. Ensure that the AC power meets the requirement. If the AC power is restricted, you are advised to charge the ESS in batches and disconnect the auxiliary power supply and power circuits of the devices that do not need to be charged.
- To use the force start function, prepare an external power supply for the system and set **Working mode** to **PQ** under **Monitoring** > **PCS** > **Running Param.** > **Feature Parameters**.
- When you force start the ESS, the ESS functions are restricted because no deployment operation is performed. In this case, the ESS supports only battery charging and cannot be scheduled by the upper-layer controller.

Procedure

Step 1 Choose **Maintenance** > **Device Mgmt.** > **Force Start** and click **Starting up**. This operation will interrupt ongoing services in the array. Exercise caution when performing this operation.

 Copyright © Huawei Technologies Co., Ltd.

Step 2 Start the insulation resistance detection procedure. If the detection is successful, force start is initiated. Otherwise, force start fails. The overdischarge insulation resistance function is supported only in SmartLogger V300R023C00SPC172 and later versions and applies only to the C&I scenario.

NOTE

- The array-level force start operation lasts 180 minutes. The SmartLogger needs to maintain the array-level force start state. The default status is idle. After a force start task is started, the SmartLogger periodically collects the SOC value of each battery rack. If the SOC value is lower than 50%, the SmartLogger remains in the **Force starting...** state. If the SOC value of each battery rack is greater than or equal to 50% or the protection duration for force start exceeds the upper limit, the SmartLogger restores the force start state to idle.
- Do not perform deployment topology operations during a force start. Perform the operations after the force start is complete.
- You can stop a force start task. In this case, devices in the array stop force start and return to the original status. If the system does not need to be started, shut down the system.
- After an array-level force start task is started, if new devices are connected and cannot be automatically started or some devices restart, the SmartLogger delivers a force start command at an interval of 5 minutes to ensure that the devices can identify the force start state.
- If the Smart PCS performs multiple force starts in a short period, the forced starts may fail. It is recommended that the interval between two force starts be 10 minutes.

----End

7.4.12 Device Replacement

Context

You can replace, add, or delete devices on the SmartLogger WebUI. After devices are replaced, added, or deleted, the system updates the topology relationship and backup files.

NOTE

- The device replacement function is available only after the device configuration is automatically backed up once. The automatic backup is performed during the period of 00:00 to 01:00 every day.
- When selecting the SN of the old device during device replacement, ensure that the SN is correct. You are advised to replace only one device at a time.
- If the SN of the old device is incorrect and device replacement has been performed, follow these instructions:
  - If the old device that is incorrectly replaced is within the replacement scope, install the new device in the correct position based on the replacement relationship.
  - If the old device that is incorrectly replaced is not within the replacement scope, you need to perform the device replacement again to restore the original status, and then perform subsequent operations.

 Copyright © Huawei Technologies Co., Ltd.

7.4.12.1 Device Replacement (V300R023C10)

Procedure

1. Choose **Maintenance** > **Device Mgmt.** > **Device Replacement**. The device replacement page is displayed.
2. After setting the parameters, click **Submit**.

Parameter	Description	Remarks
Operate Type	Select **Add Devices**, **Replace Device**, or **Delete Device**.	• The ESC and PCS support automatic topology update. • When performing **Replace Device** and **Add Devices** , ensure that the entered device SN corresponds to the correct device type. Otherwise, the topology information will be disordered. In that case, you need to perform commissioning using the deployment wizard again to update the topology. • When performing **Replace Device**, do not delete the offline device to be replaced from the device list or delete the communication networking relationship. • When replacing an ESC, ensure that all ESCs and PCSs except the ESC to be replaced are online. • After **Replace Device** is performed, you need to reconfigure IEC 104 parameters for the new device and then delete the old device from the communication network. • If **Add Devices**, **Replace Device**, or **Delete Device** fails for multiple times, you are advised to perform commissioning using the deployment wizard again to update the topology.
Device Type	Select **CMU**, **ESC**, or **PCS**.	
SN of Old Device	SN of the old device.	
SN of New Device	SN of the new device.	

 Copyright © Huawei Technologies Co., Ltd.

NOTE

The SmartLogger can automatically back up CMU parameters. If the CMU is replaced, the backup CMU parameters are automatically imported to the new CMU. The function of CMU parameter backup is only supported in SmartLogger V300R023C10 and later versions, which shall be matched with the version of the ESS software.

- C&I scenario: LUNA2000B V100R023C00SPC120 and later versions.
- Utility-scale scenario: LUNA2000C V100R023C00SPC110 and later versions.

7.4.12.2 Device Replacement (V300R024C00 and Later Versions)

Procedure

1. Choose **Maintenance** > **Device Mgmt.** > **Device Replacement**. The device replacement page is displayed.
2. After setting the parameters, click **Submit**.

 Copyright © Huawei Technologies Co., Ltd.

Operate Type	Device Type	Description	Remarks
Replace Device	• CMU • IBCU • ESC • PCS	• The DC topology is automatically updated. • The AC topology is automatically updated. • Parameters are automatically backed up and imported to new devices (supported only by the CMU and IBCU). • The replacement relationship is reported to the management system, and the IEC 104 configuration is automatically adapted.	• **Replace Device** can be performed only for offline devices. • When performing **Replace Device** and **Add Devices**, ensure that the entered device SN corresponds to the correct device type. Otherwise, the topology information will be disordered. In that case, you need to perform commissioning using the deployment wizard again to update the topology. • When performing **Replace Device**, do not delete the offline device to be replaced from the device list or delete the communication networking relationship. • When replacing an ESC, ensure that all ESCs and PCSs except the ESC to be replaced are online. • If **Add Devices**, **Replace Device**, or **Delete Device** fails for multiple times, you are advised to perform commissioning using the deployment wizard again to update the topology.
Add Device	• IBCU • PCS	• The DC topology is automatically updated. • The AC topology is automatically updated.	
Delete Device	• IBCU • PCS	• The DC topology is automatically updated. • The AC topology is automatically updated. • The device list is automatically updated.	

7.4.13 Communication Records

The SmartLogger supports the function of exporting communication records.

Set **Choose port**, **Protocol Selection**, and **Record time**. Click **Start** to start the communication records. Click **Export** to stop and export communication records.

 Copyright © Huawei Technologies Co., Ltd.

Parameter	Description
Choose port	Select the port of the communication records.
Protocol Selection	Select the protocol type of the connected device. **IEC104** and **ModbusTCP** are supported. **NOTE** IEC 104 or Modbus TCP can be selected only when the port is WAN, LAN, SFP1, or SFP2.
Record time	Set the duration of the communication records. The duration range of the communication records is [5, 30] minutes.

7.4.14 SOC One-Click Balancing

The SOC one-click balancing function applies only to the LUNA2000-200KWH-2H1, LUNA2000-161KWH-2H1, LUNA2000-126KWH-2H1, and LUNA2000-97KWH-1H1 C&I ESSs.

Context

This function can be used to balance the SOCs of multiple battery packs in an ESS.

- In the off-grid scenario, PV power is used to charge the ESS to balance the SOCs of multiple battery packs in the ESS.
- In the on/off-grid scenario, mains power is used to charge the ESS to balance the SOCs of multiple battery packs in the ESS.

Table 7-2 Application scenarios

Application Scenario	Condition
Initial deployment	Check the SOCs[a] of multiple battery packs in the ESS. If $SOC_{MAX} - SOC_{MIN} > 10\%$, the actual charge and discharge energy and backup duration of the ESS will be affected. You are advised to perform SOC balancing.
Replacing a battery pack	
The ESS has been running properly for three to six months.	
Note a: Methods of checking the SOCs • SmartLogger WebUI: Choose **Monitoring** > **ESS** > **ESU** > **ESR** > **ESM** > **Running Info**. • On the FusionSolar Smart PV Management System (SmartPVMS): Choose **Monitoring** > **ESS** > **Overview**.	

 Copyright © Huawei Technologies Co., Ltd.

NOTICE

Before using the SOC one-click balancing function, ensure that:

- Choose **Settings** > **Battery Settings** and check whether **Array end-of-charge SOC** is set to 100%. If not, set the value to 100%.
- During SOC balancing, scheduling commands are ineffective. After SOC balancing is complete, the system will respond to scheduling commands properly.
- When this function is enabled, the PV output will be limited, and the PCS corresponding to the unbalanced ESS will shut down. You are advised to enable this function when the ESS SOC is high.
- After SOC balancing is complete, the PCS starts up and the array continues to operate. If the ESS does not need to operate, shut it down manually.
- Off-grid scenario:
  - Ensure that the irradiance is proper and the loads have been disconnected (except the auxiliary load of the ESS) to avoid SOC balancing failure due to interferences from the loads.
  - If an AC power failure occurs during SOC balancing, you do not need to perform any operation. The system will perform a black start to continue SOC balancing.
- On/Off-grid scenario: SOC balancing is supported only in on-grid mode. If the mains is disconnected during SOC balancing, the SOC balancing process ends. The ESS automatically switches to off-grid mode and performs a black start.

Procedure

Step 1 Choose **Maintenance** > **Device Mgmt.** > **SOC one-click balancing** and select the target ESS for SOC balancing.

1. Set **Upper limit of subarray energy storage charging power**. This parameter is displayed and set only in the on/off-grid scenario.
2. Select the ESS for which SOC balancing is required.

Parameter	Description
Upper limit of subarray energy storage charging power	Set the upper limit of the ESS charge power in the array. The default value is 2000 kW and the value range is [0, 50000]. It is recommended that the maximum ESS charge power be limited based on the transformer of the power distribution equipment to prevent the transformer from tripping. The recommended value is less than (Transformer capacity of the power distribution equipment – Maximum load capacity).
SOC balancing status	Indicates the SOC balancing status. • Unbalanced: SOC balancing is not performed for battery packs. • Balancing: SOC balancing is in process for battery packs. • Balanced: SOC balancing is completed for battery packs.

 Copyright © Huawei Technologies Co., Ltd.

Step 2 Click **Starting up**. For details about the time required for SOC balancing, see Table 7-3.

NOTE

- In the on-grid scenario, the **Starting up** and **Stop** buttons are grayed out.
- SOC balancing for one ESS requires a maximum of 48 hours. If SOC balancing is not complete within 48 hours for one ESS, the balancing fails.
- In the off-grid scenario, SOC balancing is performed one by one for multiple ESSs. You are advised to disconnect the loads and use PV power to charge the multiple ESSs until their SOCs reach 90% before starting SOC balancing. If SOC balancing for an ESS fails, SOC balancing for the other ESSs stops.
- In the on/off-grid scenario, SOC balancing is performed all at once for multiple ESSs. If SOC balancing of an ESS fails, SOC balancing for the other ESSs is not affected.

Table 7-3 Estimated time (examples)

Scenario	PV-to-ESS Ratio[a]	ESS Model	Initial SOC	Estimated Time
Off-grid[b]	1	LUNA2000-200KWH-2H1	50%	2 hours/cabinet
	1	LUNA2000-97KWH-1H1	50%	1.5 hours/cabinet
	1	LUNA2000-200KWH-2H1	0%	3 hours/cabinet
	1	LUNA2000-97KWH-1H1	0%	2 hours/cabinet
On/Off-grid[c]	/	LUNA2000-200KWH-2H1	50%	1.5 hours
	/	LUNA2000-97KWH-1H1	50%	1.5 hours
	/	LUNA2000-200KWH-2H1	0%	3 hours
	/	LUNA2000-97KWH-1H1	0%	2 hours

Note a: If the irradiance is insufficient, the actual time required for SOC balancing will exceed the estimated time.

Note b: Time for balancing multiple ESSs = Quantity of ESSs x Estimated time for balancing one ESS.

Note c: Time for balancing multiple ESSs = Estimated time for balancing one ESS.

----End

 Copyright © Huawei Technologies Co., Ltd.

7.4.15 Wire Sequence Detection

This function applies only to the LUNA2000-(107-241) series C&I ESSs, and is displayed in multi-ESS scenarios.

Application Scenarios

Off-grid scenario, on/off-grid scenario, or zero feed-in scenario with phase-level power control for three-phase imbalance

NOTE

- In the off-grid scenario, disconnect the loads before starting wire sequence detection.
- Phase-level power control for three-phase imbalance must meet the following conditions:
  - The **Limitation mode** for **Active power control** is set to **Single phase power**. (Choose **Settings** > **Power Adjustment** > **Active power control** > **Common Parameters** and set **Limitation mode**.)
  - **Three-phase imbalance control** is set to **Enable**. (Choose **Settings** > **Power Adjustment** > **Active power control** > **Common Parameters** and set **Three-phase imbalance control**.)
  - The ESS output mode is **Three-phase four-wire**. (Choose **Monitoring** > **ESS** > **Running Param.** > **Grid Parameters**, and set **Output mode**.)

Procedure

Step 1 Choose **Maintenance** > **Device Mgmt.** > **Wire sequence detection**.

Step 2 Tap **Starting up** to start wire sequence detection.

Parameter	Description
Wire sequence detection status	Specifies the status of wire sequence detection. ● Not detected ● Testing ● Detection failed: indicates that the wire sequence detection has failed. In this case, view the **Abnormal Cable Sequence** alarm and rectify the fault based on the handling suggestions. ● If the wire sequence is consistent, no action is required. ● If the wire sequence is inconsistent, rectify the cable connection. 1. View the phase sequence detection result. The phase sequences of multiple ESSs must be **Positive**. If not, rectify the cable connection. 2. If the phase sequences of multiple ESSs are **Positive**, check the phases. If the phase difference between ESSs is greater than 60°, rectify the cable connection.
Wire sequence detection time	Specifies the end time of wire sequence detection.

 Copyright © Huawei Technologies Co., Ltd.

Parameter	Description
Wire sequence check progress	Specifies the progress of wire sequence detection.
Phase sequence	Check whether the phase sequence is **Positive** or **Negative**.
Phase	Check the phase detection result. The result ranges from 0° to 360°.

----End

7.4.16 Batch Startup/Shutdown

The SmartLogger can be used to start and shut down PCSs, inverters, and ESSs in batches.

Procedure

Step 1 Choose **Maintenance** > **Device Mgmt.** > **Connect Device**.

Step 2 Tap the start or shutdown button.

Step 3 In the dialog box that is displayed, select the devices to be started or shut down in batches. You can start or shut down arrays, PCS, ESSs, or inverters based on site requirements.

----End

NOTE

- For a PV-only array, there is no dialog box for batch startup or shutdown.
- For an ESS-only array, there are only dialog boxes for PCS and ESS startup and shutdown.
- When a batch startup command is delivered, the PID modules start. When a batch shutdown command is delivered, the PID modules do not shut down.
- After shutting down southbound devices using the SmartLogger, wait for 5 minutes and then black-start the array. Otherwise, the black start may fail.

7.4.17 IEC104 Test

This function is used to simulate data changes of analog signals to map teleindication and telemetry signals respectively. Before using this function, set the basic IEC104 parameters. For details, see **6.3.2 Setting Parameters for Connecting to the Management System**.

Procedure

Step 1 Choose **Maintenance** > **Onsite Test** > **IEC104 Test** > **Remote Telesignal Test/ Remote Telemetry Test**.

Step 2 Set the test mode, automatic interval, and IEC104 connection mode, and click **Submit**.

Step 3 Start the test.

- **Manual**: Click **Submit** to send the analog value of a single signal for testing.
- **Auto**: Click **Starting up** to send the analog values of signals in sequence for testing.

----End

Table 7-4 Parameter description

Parameter	Description
Automatic Interval	Specifies the duration of an analog value. After the duration elapses, the real-time value is reported. In auto mode, the system will continue to send the analog value of the next signal.
IEC104 link	Set this parameter based on the value of **Link setting** in the **Basic parameters** area for IEC104. ● If **Link setting** is set to **Enable (Limited)**, set this parameter to **IEC104-N**[1]. ● If **Link setting** is set to **Enable (Unlimited)**, set this parameter to **Common Configuration**.
Real-time value	Specifies the real-time value in the actual environment.
Commissioning Value	Specifies the simulated value used for testing.
[1]: N ranges from 1 to 10.	

NOTE

- The **Commissioning Value** for teleindication is the negation of **Real-time value**. For example, if **Real-time value** is 1, **Commissioning Value** is 0.
- The **Commissioning Value** for telemetry is the serial number of the signal.
- SmartLogger V300R024C10 and later versions support this function.

7.5 Device Replacement

CAUTION

During SmartLogger replacement, if the enclosure is hot and scalds may occur, wait until the SmartLogger cools down before proceeding to the next step.

 Copyright © Huawei Technologies Co., Ltd.

7.5.1 Exporting Configuration Files from the SmartLogger WebUI

Step 1 Before replacing the SmartLogger, export its configuration files to a local PC. Perform operations by referring to **7.4.3.1 Exporting Full Configuration Files**.

Step 2 Power off the SmartLogger, remove its cables, and label the cables.

Step 3 Install a new SmartLogger, reconnect the cables, and power on the SmartLogger.

Step 4 Log in to the WebUI and import the exported configuration files from the local PC to the new SmartLogger. Perform operations by referring to **7.4.3.2 Importing Full Configuration Files**.

Step 5 After the import is successful, the SmartLogger restarts for the configuration files to take effect. Ensure that the parameters on the settings tab page and the parameters for the built-in MBUS are correctly set.

----End

7.5.2 Exporting Configuration Files from the SUN2000 App

NOTICE

Do not power off the SmartLogger3000 when exporting all configuration files.

Step 1 Before replacing the SmartLogger, export its configuration files to a USB flash drive.

1. Insert the USB flash drive into the USB port at the bottom of the SmartLogger3000.
2. Run the SUN2000 app and select a connection mode. On the operation screen, tap **Manual connection**, and select **WLAN**. The initial name of the WLAN hotspot is **Logger_*SN*** (you can view the device SN on the SmartLogger label).

   NOTE

   You can obtain the initial WLAN password from the label on the device, that is, the characters following **PSW**. If the label on the device does not contain the **PSW** field, the initial password is **Changeme**. Use the initial password for the first login and change it immediately after login. To ensure account security, protect the password by changing it periodically, and keep it secure. Your password might be stolen or cracked if it is left unchanged for extended periods. If a password is lost, devices cannot be accessed. In these cases, the Company shall not be liable for any loss caused to the plant.

3. After connecting the WLAN, log in to the device and access the main menu screen.

 Copyright © Huawei Technologies Co., Ltd.

NOTE

- When you log in to the device for the first time, set the login password. To ensure account security, protect the password by changing it periodically, and keep it secure. Your password might be stolen or cracked if it is left unchanged for extended periods. If a password is lost, devices cannot be accessed. In these cases, the Company shall not be liable for any loss caused to the plant.
- You will be locked out for 10 minutes after five consecutive failed password attempts (the interval between two consecutive entries is less than 2 minutes).

4. Choose **Maintenance** > **Export All Files**, set **Encryption password of the exported file**, and tap **Confirm** to export the configuration files.
5. After the export is complete, tap **OK** and remove the USB flash drive.

Step 2 Power off the SmartLogger, remove its cables, and label the cables.

Step 3 Install a new SmartLogger, reconnect the cables, and power on the SmartLogger.

Step 4 Run the SUN2000 app, log in to the new device, and import the configuration files.

1. Insert the USB flash drive into the USB port at the bottom of the new SmartLogger3000.
2. Start the SUN2000 app and log in to the new device. On the operation screen, tap **Manual connection**, and select **WLAN**. The initial name of the WLAN hotspot is **Logger-SmartLogger SN**. You can view the device SN on the SmartLogger3000 label.

   NOTE

   You can obtain the initial WLAN password from the label on the device, that is, the characters following **PSW**. If the label on the device does not contain the **PSW** field, the initial password is **Changeme**. Use the initial password for the first login and change it immediately after login. To ensure account security, protect the password by changing it periodically, and keep it secure. Your password might be stolen or cracked if it is left unchanged for extended periods. If a password is lost, devices cannot be accessed. In these cases, the Company shall not be liable for any loss caused to the plant.

3. After connecting the WLAN, log in to the device and access the main menu screen.

   NOTE

   - When you log in to the device for the first time, set the login password. To ensure account security, protect the password by changing it periodically, and keep it secure. Your password might be stolen or cracked if it is left unchanged for extended periods. If a password is lost, devices cannot be accessed. In these cases, the Company shall not be liable for any loss caused to the plant.
   - You will be locked out for 10 minutes after five consecutive failed password attempts (the interval between two consecutive entries is less than 2 minutes).

4. Choose **Maintenance** > **Import All Files**, enter **Decryption password of the imported file**, and tap **Confirm** to import the configuration files.
5. After the import is complete, tap **OK** and remove the USB flash drive.

Step 5 After the import is successful, the SmartLogger restarts for the configuration files to take effect. Ensure that the parameters on the settings tab page and the parameters for the built-in MBUS are correctly set.

----End

7.6 Device Disposal

If the service life of the SmartLogger expires, dispose of the SmartLogger according to the local disposal act for waste electric appliances.

Copyright © Huawei Technologies Co., Ltd.

8 FAQ

8.1 How Do I Connect the SmartLogger to the SUN2000 App or FusionSolar App?

Prerequisites

- The SmartLogger has been powered on.
- The WLAN function has been enabled on the SmartLogger.

  NOTE

  - By default, **WLAN** is set to **OFF in idle state**.
  - When **WLAN** is set to **OFF in idle state**, the WLAN function is available within 4 hours after the SmartLogger is powered on. In other cases, hold down the RST button (for 1s to 3s) to enable the WLAN function.
  - If **WLAN** is set to **Always OFF**, choose **Settings** > **Wireless Network** on the SmartLogger WebUI and set **WLAN** to **Always ON** or **OFF in idle state**.
- The FusionSolar app is recommended when the SmartLogger is connected to the FusionSolar SmartPVMS. The SUN2000 app is recommended when the SmartLogger is connected to other management systems.
- The SUN2000 app or FusionSolar app has been installed on the mobile phone.

Context

- The SUN2000 app or FusionSolar app communicates with the SmartLogger through the WLAN to provide functions such as alarm query, parameter settings, and routine maintenance.
- Mobile phone operating system: Android 4.0 or later
- Access Huawei AppGallery, search for **SUN2000** or **FusionSolar**, and download the app.

 Copyright © Huawei Technologies Co., Ltd.

Figure 8-1 WLAN connection range

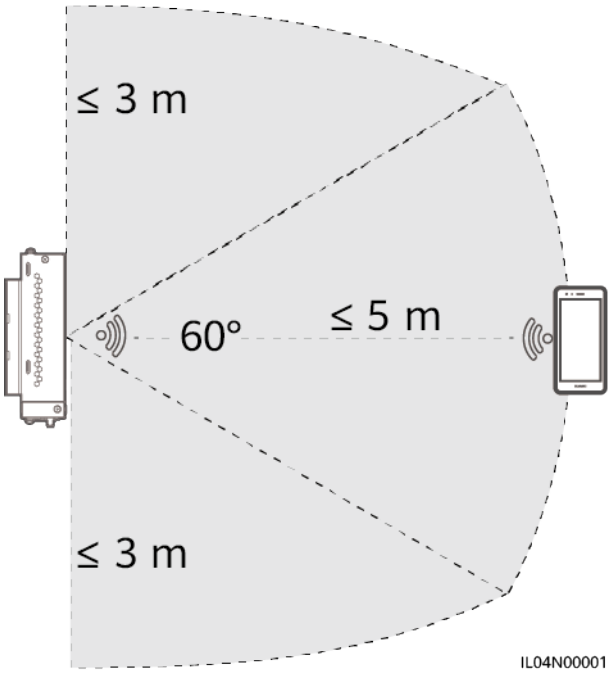

Procedure

Step 1 Log in to the app.

1. (Connecting the SmartLogger to the FusionSolar SmartPVMS) Open the FusionSolar app, log in to intl.fusionsolar.huawei.com as installer account, and choose **Me > Device commissioning** to connect to the WLAN hotspot of the SmartLogger.
2. (Connecting the SmartLogger to Other Management Systems) Open the SUN2000 app and connect to the WLAN hotspot of the SmartLogger.
3. Select **installer** and enter the login password.
4. Tap **Log in** and go to the **Quick settings** screen or **SmartLogger** screen.

 Copyright © Huawei Technologies Co., Ltd.

NOTE

- The screenshots in this document correspond to the FusionSolar app version 6.22.10.118 (Android) and SUN2000 app version 6.22.10.117 (Android).
- The initial name of the SmartLogger WLAN hotspot is **Logger_*SN*** (you can view the device SN on the SmartLogger label). You can obtain the initial WLAN password from the label on the device, that is, the characters following **PSW**. If the label on the device does not contain the **PSW** field, the initial password is **Changeme**.
- For the initial passwords of **installer** and **user** for device commissioning on the SUN2000 app and FusionSolar app, see **A Product User Lists**.
- Use the initial password upon first power-on and change it immediately after login. To ensure account security, change the password periodically and keep the new password in mind. Not changing the initial password may cause password disclosure. A password left unchanged for a long period of time may be stolen or cracked. If a password is lost, the device cannot be accessed. In these cases, the user is liable for any loss caused to the PV plant.
- If the SmartLogger is powered on for the first time or the factory defaults are restored and parameter configuration is not performed on the WebUI, the **Quick settings** screen is displayed after you log in to the app. You can set parameters based on site requirements.
- To upgrade the SmartLogger using the app, insert a USB flash drive that contains only one SmartLogger upgrade package into the USB port of the SmartLogger.

Figure 8-2 Logging in to the app

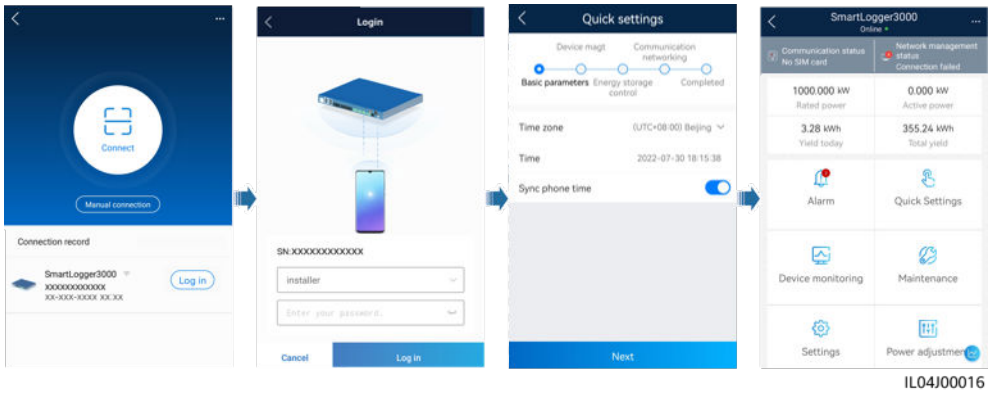

----End

8.2 How Do I Set FTP Parameters?

Context

- The FTP function is used to access a third-party NMS. The SmartLogger can report the configuration information and running data of the managed PV plant system through FTP. A third-party NMS can access Huawei devices after being configured.

  NOTE

  The SmartLogger cannot report ESS data through FTP.

- FTP is a universal standard protocol without any security authentication mechanism. Data transmitted by FTP is not encrypted. To reduce network security risks, the IP address of the connected third-party FTP server is left

blank by default. This protocol can transmit the running data of PV plants, which may cause user data breach. Therefore, exercise caution when using this protocol. Users are liable for any loss caused by the enabling of the FTP protocol (non-secure protocol). Users are advised to take measures at the PV plant level to reduce security risks, or use Huawei management system to mitigate the risks.

Procedure

Step 1 Choose **Settings > Comm. Param. > FTP**, set FTP parameters, and click **Submit**.

Parameter	Description
FTP server	Set this parameter to the domain name or IP address of the FTP server.
User name	Set this parameter to the user name for logging in to the FTP server.
Password	Set this parameter to the password for logging in to the FTP server.
Remote directory	After you set this parameter, a subdirectory of the same name is created in the default data upload directory (specified by the FTP server).
Data reporting	Specifies whether data can be reported.
File format	**Format 1**, **Format 2**, **Format 3**, and **Format 4** are supported. **NOTE** **Format 2** has two more information points than **Format 1**: E-Day (current-day energy yield) and E-Total (total energy yield). **Format 3** has more information points than **Format 1** and **Format 2**: power meter, PID module, user-defined device, and SmartLogger data. **Format 4** has more information points than **Format 3**: active and reactive power of power meters.
File name	Set this parameter to the format of the file name.
Time format	Set this parameter to the time format.
Reporting mode	The value can be **Cyclic** or **Fixed time**. ● **Cyclic**: Periodically reports data. **Reporting interval** specifies the interval for reporting data. **File mode** specifies whether all data or only the incremental data of a day is reported each time. ● **Fixed time**: Reports data at a specified time. **Fixed time** specifies the time for reporting data.

 Copyright © Huawei Technologies Co., Ltd.

NOTE

You can click **Start report test** to check whether the SmartLogger can report data to the FTP server.

----End

Troubleshooting

NOTICE

If the error code is not listed in the following table, provide SmartLogger run logs and contact Huawei technical support.

Error Code	Troubleshooting Suggestion	Error Code	Troubleshooting Suggestion
0x1002	Configure the FTP server address.	0x1003	1. Check whether the DNS server address is correctly configured. 2. Check whether the domain name of the third-party FTP server is correctly configured.
0x1004	Configure the user name of the FTP account.	0x1005	Configure the user name of the FTP account.
0x3001	1. Check whether the FTP server address is correctly configured. 2. Check whether the third-party FTP server is working properly.	0x3002	1. Check whether the user name of the FTP account is correctly configured. 2. Check whether the password of the FTP account is correctly configured.
0x3007	Check whether the third-party FTP server allows the client to upload data.	0x3008	Ensure that the SmartLogger data upload directory exists on the third-party FTP server.
Other Codes	Provide SmartLogger run logs and contact Huawei technical support.	-	-

 Copyright © Huawei Technologies Co., Ltd.

8.3 How Do I Set Email Parameters?

Context

- The SmartLogger can send emails to inform users of the current energy yield, alarms, and device status of the plant, helping users understand the operating status of the plant in a timely manner.
- When using this function, ensure that the SmartLogger can connect to the configured email server and the Ethernet parameters and email parameters are correctly set for the SmartLogger.

Procedure

Step 1 Choose **Settings** > **Comm. Param.** > **Email**, set Email parameters, and click **Submit**.

Parameter	Description
SMTP server	Set this parameter to the domain name or IP address of the SMTP server.
Encryption mode	Set this parameter to the email encryption mode.
SMTP port	Set this parameter to the email sending port.
Weak cipher suite	This function is used to ensure compatibility in encrypted communication between the SmartLogger and devices of earlier versions or certain management systems. If these devices or management systems use weak cipher suites, set this parameter to **Enable** to ensure maintain normal communication. This parameter is displayed only in SmartLogger V300R024C00 and later versions.
TLSv1	Enable or disable the TLSv1 security protocol.
TLSv1.1	Enable or disable the TLSv1.1 security protocol.
User Name	Set this parameter to the user name for logging in to the SMTP server.
Password	Set this parameter to the password for logging in to the SMTP server.
Email language	Set this parameter to the language for sending emails.
Send address	Set this parameter to the email address for sending emails.
Receive address N **NOTE** N is 1, 2, 3, 4, or 5.	Set this parameter to the email address for receiving emails.

 Copyright © Huawei Technologies Co., Ltd.

Parameter	Description
Energy yield	Specifies whether to send energy yield data by email and the time for sending emails.
Alarms	Specifies whether to send alarms by email and the severity of the alarms to be sent.

NOTE

You can click **Send test mail** to check whether the SmartLogger can successfully send emails to users.

----End

Troubleshooting

NOTICE

If the error code is not listed in the following table, provide SmartLogger run logs and contact Huawei technical support.

Error Code	Suggestion	Error Code	Suggestion
0x2002	1. Check whether the IP address of the DNS server is correct. 2. Check whether the domain name and the IP address of the SMTP server are correct. 3. Check whether the network communication between the management system and the DNS server is normal.	0x2003	1. Try again later. 2. Check whether the domain name and the IP address of the SMTP server are correct.

 Copyright © Huawei Technologies Co., Ltd.

Error Code	Suggestion	Error Code	Suggestion
0x200b	1. Check whether the DNS server address is correct. 2. Check whether the domain name and the IP address of the SMTP server are correct.	0x4016	1. Try again later. 2. Check whether the DNS server address is correctly configured. 3. Check whether the domain name and the IP address of the SMTP server are correct.
0x406e	Confirm the encryption mode and port supported by the email box, and check whether they are correct.	0x8217	1. Check whether the user name and password are correct. 2. Log in to the email box of the email sender and start the SMTP service. 3. Log in to the email box of the email sender and start the third-party client license code function.
0xa003	Check whether the domain name and the IP address of the SMTP server are correct.	0xa005	Enter the user name correctly.
0xa006	Enter the password correctly.	0xe002	Configure the domain name and the IP address of the SMTP server correctly.
0xe003	Configure the addresses for sending and receiving emails correctly.	Others	Please provide SmartLogger running logs and contact Huawei Service Center.

8.4 How Do I Change the SSID and Password of the Built-in WLAN?

Procedure

Step 1 Choose **Settings** > **Wireless Network**, set parameters for the built-in WLAN, and click **Submit**.

 Copyright © Huawei Technologies Co., Ltd.

Parameter	Description
WLAN	Specifies the status of the built-in WLAN. ● Always ON: The WLAN module is powered on. ● OFF in idle state: The WLAN module is automatically powered off when idle. You can hold down the RST button for 1s to 3s to power on the WLAN module and wait for connecting to the SUN2000 app. If the SUN2000 app fails to be connected, the WLAN module is automatically powered off after it is powered on for 4 hours. ● Always OFF: The WLAN module is not powered on and cannot be powered on by holding down the button.
SSID	● Specifies the name of the built-in WLAN. ● The initial name of the built-in WLAN is **Logger_*SN***.
Password	● Specifies the password for accessing the built-in WLAN. ● You can obtain the initial WLAN password from the device label, that is, the characters following **PSW**. If the device label does not contain the **PSW** field, the initial password is **Changeme**. ● Use the initial password for the first login and change it immediately after login. To ensure account security, protect the password by changing it periodically, and keep it secure. Not changing the initial password may cause password disclosure. Your password might be stolen or cracked if it is left unchanged for extended periods. If you lose the password, the device must be restored to its factory settings. In these cases, the Company shall not be liable for any loss caused to the plant.

----End

8.5 How Do I Use DI Ports?

- The SmartLogger provides four DI ports, which support DI active scheduling, DI reactive scheduling, DRM, remote shutdown, and input of correlated alarms.
- For details about DI active scheduling, DI reactive scheduling, DRM, and remote shutdown, see **6.8 Power Grid Scheduling**.

 Copyright © Huawei Technologies Co., Ltd.

NOTICE

Before setting the corresponding function, ensure that the DI port is not set for other purposes. Otherwise, the setting will fail.

Alarm Input

When a valid level is delivered into a DI port, an alarm is raised. You can set the alarm name and severity.

Step 1 Choose **Settings** > **DI** and associate alarms with DI ports.

Parameter	Description
Activation Status	If this parameter is set to **Activated** for a DI port, you can set the function of the DI port. Otherwise, you cannot set the function of the DI port.
Dry Contact Status	Specifies the valid input status of a DI port.
Alarm Generation	Specifies whether to allow alarm generation.
Alarm Severity	Specifies the alarm severity.
Trigger Shutdown	Specifies whether to deliver a solar inverter remote shutdown command.
Trigger Startup	Specifies whether to deliver a solar inverter remote startup command.
Alarm Name	Specifies the alarm name.
Startup Delay	Specifies the delay time for the automatic startup of the solar inverter after **Trigger Startup** is set to **Enable**.

----End

8.6 How Do I Use DO Ports?

The SmartLogger provides two DO ports, which support the reset of external routers, audible and visual alarming for grounding faults, and output of correlated alarms.

NOTICE

Before setting the corresponding function, ensure that the DO port is not set for other purposes. Otherwise, the setting will fail.

 Copyright © Huawei Technologies Co., Ltd.

Resetting an External Router

Connect one DC power cable of the 3G router to a DO port on the SmartLogger, and power on or off the wireless module by connecting or disconnecting the DO dry contact to control the reset of the 3G router.

Step 1 Cut off a DC power cable of the router, and connect the DC power cable to a DO port on the SmartLogger.

Figure 8-3 Connecting to a DO port

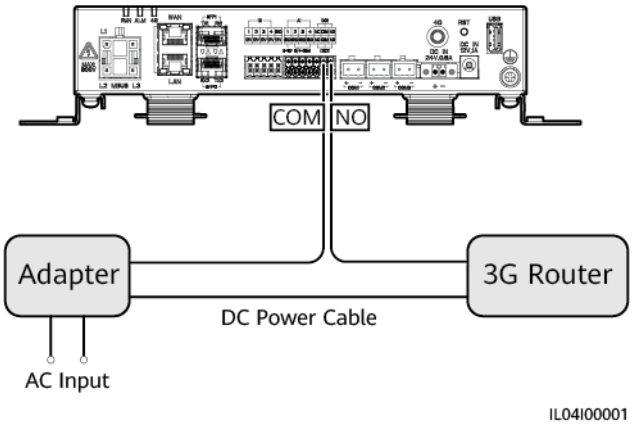

Step 2 Choose **Settings** > **Other parameters** and set **Reset the external router** to the DO port.

----End

Audible and Visual Alarm for Grounding Fault

Connect one DC power cable of the audible and visual alarm to a DO port on the SmartLogger, and power on or off the audible and visual alarm by connecting or disconnecting the DO dry contact to implement audible and visual alarming for grounding faults.

Step 1 Connect one DC power cable of the audible and visual alarm to the DO port (COM/NO) on the SmartLogger.

Step 2 Choose **Settings** > **Alarm Output** and associate **Low Insulation Resistance** with the DO port.

----End

Alarm Output

After an ESS or inverter alarm is associated with a DO port, the alarm signal is delivered from the DO port when the ESS or inverter raises the alarm.

Step 1 Inverter alarm association: Choose **Settings** > **Alarm Output** and associate an inverter alarm with a DO port.

NOTE

If the SmartLogger is restarted or powered off after the function is enabled, the DO port status may change and the alarm output may be abnormal.

Step 2 ESS alarm association: Choose **Settings** > **DI/DO** and associate an ESS alarm with a DO port.

1. Set the valid status of DO1 and DO2.
2. Select the DO port to be associated with the alarm.

----End

8.7 How Do I Use the USB Port?

The SmartLogger has a USB port, which provides 5 V/1 A power supply.

- The USB port can connect to a 3G router to supply power to the router, and the power supply of the USB port is disconnected when communication is disconnected, implementing 3G router reset control.

NOTICE

If the maximum operating current of the 3G router is greater than 1 A, it cannot be connected through the USB port.

- The USB port can connect to a USB flash drive for local maintenance, device log export, and device upgrade.

NOTE

It is recommended that you use a SanDisk, Netac, or Kingston USB flash drive to ensure compatibility.

Connecting to a 3G Router

If the DC power cable of the 3G router has a standard USB connector with the maximum operating current of less than 1 A, it can be directly connected to the USB port on the SmartLogger.

Step 1 Connect the USB connector of the DC power cable for the 3G router to the USB port on the SmartLogger.

Step 2 If you need to use the reset function of the external router, choose **Settings** > **Other Parameters** and set **Reset the external router** to **USB**.

----End

Connecting to a USB Flash Drive for Local Maintenance

Step 1 Insert the USB flash drive into the USB port at the bottom of the SmartLogger.

Step 2 Log in to the app as **installer**, choose **More** > **System Maintenance** on the SmartLogger screen, and perform the local maintenance.

 Copyright © Huawei Technologies Co., Ltd.

Local Maintenance	Description	Prerequisites
Offline Configuration	After the power plant deployment configuration file is imported through **Offline Configuration**, the SmartLogger automatically completes the deployment configuration.	The power plant deployment configuration file has been saved in the root directory of the USB flash drive.
Exporting All Files	Before replacing the SmartLogger, export the SmartLogger configuration file to a local PC.	-
Importing All Files	After replacing the SmartLogger, import the local configuration file to the new SmartLogger. After the import is successful, the SmartLogger restarts for the configuration file to take effect. Ensure that the parameters on the Settings tab page and the parameters for the built-in MBUS are correctly set.	All exported files have been saved in the root directory of the USB flash drive.

Step 3 After the local maintenance is complete, remove the USB flash drive.

NOTICE

After files are imported, the SmartLogger automatically restarts.

----End

Connecting to a USB Flash Drive to Export Device Logs

Step 1 Connect the USB flash drive to the USB port on the SmartLogger.

Step 2 Log in to the app as **installer**, choose **More** > **Device Logs**, select the device whose logs you want to export, and tap **Next**.

Step 3 Select the types of logs to be exported and tap **Confirm** to start exporting device logs.

 Copyright © Huawei Technologies Co., Ltd.

Step 4 After the logs are exported, remove the USB flash drive.

----End

Connecting to a USB Flash Drive for Device Upgrade

You can upgrade the SmartLogger, solar inverter, MBUS module, or PID module using a USB flash drive.

Step 1 Save the device upgrade package to the USB flash drive.

NOTE

Do not decompress the upgrade package.

Step 2 Connect the USB flash drive to the USB port on the SmartLogger.

Step 3 Log in to the app as **installer**, choose **More** > **Upgrade**, select a single device or multiple devices of the same type, and tap **Next**.

Step 4 Select the upgrade package and tap **Next**.

Step 5 Confirm the upgrade package and the device to be upgraded, and tap **Finish** to start upgrading the device.

NOTE

After the upgrade is complete, the device automatically restarts.

Step 6 After the upgrade is complete, remove the USB flash drive.

----End

8.8 How Do I Change a Device Name?

Procedure

Step 1 Choose **Maintenance** > **Device Mgmt.** > **Device List**.

Step 2 Modify the device name based on the actual situation, select the modified entry, and click **Modify Device Info**.

NOTE

- You can also export device information to a .csv file, modify the file, and import the modified file to update the device information.
- When changing a device name, do not use any of the following characters: -!#?~^<>'&/@`= +",|*%

----End

8.9 How Do I Change the Communications Address?

The SmartLogger allows you to change the communications addresses of Huawei devices on the **Connect Device** or **Device List** page.

Changing the Communications Address on the Connect Device Page

Step 1 Choose **Maintenance** > **Device Mgmt.** > **Connect Device**.

Step 2 Click **Auto Assign Address**, set the start address for assignment, and confirm the address assignment.

Step 3 Confirm the address adjustment, adjust the device address as required, and click **Address Adjustment**.

Step 4 Confirm to search for the device again.

Step 5 After the search is complete, click **Close**.

----End

Changing the Communications Address on the Device List Page

Step 1 Choose **Maintenance** > **Device Mgmt.** > **Device List**.

Step 2 Change the device communications address and device name based on the site requirements, select the modified entries, and click **Modify Device Info**.

Step 3 Choose **Maintenance** > **Device Mgmt.** > **Connect Device** and click **Auto. Search**.

Step 4 After the search is complete, click **Close**.

----End

8.10 How Do I Export Inverter Parameters?

Context

You can export configuration parameters of multiple solar inverters to a .csv file. Site engineers can then check whether the solar inverter configurations are correct in the exported file.

Procedure

Step 1 Choose **Maintenance** > **Device Mgmt** > **Export Param**.

Step 2 Select the name of the device whose parameters are to be exported, and click **Export**.

Step 3 Observe the progress bar and wait until the export is complete.

Step 4 After the export is successful, click **Log archiving** to save the file.

----End

 Copyright © Huawei Technologies Co., Ltd.

8.11 How Do I Clear Alarms?

Context

You can clear all active and historical alarms for the selected device and re-collect alarm data.

Procedure

Step 1 Choose **Maintenance** > **Device Mgmt.** > **Clear Alarm**.

Step 2 Select the name of the device whose alarms are to be cleared, click **Submit**, and choose **All**, **Locally synchronized alarms**, or **Alarms stored on devices** to clear alarms.

NOTE

If alarms are cleared for the SmartLogger, you must reset alarms on the management system. Otherwise, the management system cannot obtain the alarm information re-collected by the SmartLogger.

If the SmartLogger is restored to factory settings or user data is cleared, alarms on the management system will not be reset synchronously. You need to manually reset alarms.

----End

8.12 How Do I Enable the AI1 Port to Detect SPD Alarms?

Context

In the smart array controller application scenario, the AI1 port on the SmartLogger can be connected to the SPD alarm output to raise an alarm when the SPD is faulty.

Procedure

Step 1 Choose **Settings** > **Other Parameters** and set **AI1 SPD detection alarm** to **Enable**.

----End

 Copyright © Huawei Technologies Co., Ltd.

8.13 Which Models of Power Meters and EMIs Are Supported by the SmartLogger?

Table 8-1 Supported power meters

Vendor	Model	Export Limitation	Remarks
ABB	A44	-	SmartLogger V300R001C00SPC110 and later versions
Acrel	PZ96L	Supported	SmartLogger V300R001C00SPC110 and later versions
Algodue	UPM209	Supported **NOTE** When the power meter connects to the SmartLogger, an external 120-ohm resistor needs to be connected to the RS485 bus of the power meter. For details, see the user manual of the power meter.	SmartLogger V300R001C00SPC110 and later versions
CHINT	DTSU666	-	SmartLogger V300R001C00SPC110 and later versions
CHINT	DTSU666-HW	Supported	SmartLogger V300R001C00SPC110 and later versions
CHINT	DTSU666-H	Supported	SmartLogger V300R001C00SPC110 and later versions
CHINT	DDSU666-H	Supported	SmartLogger V300R001C00SPC110 and later versions
Elster	A1800ALPHA	-	SmartLogger V300R001C00SPC110 and later versions
GAVAZZI	EM210	-	SmartLogger V300R001C00SPC110 and later versions
Janitza	UMG103-CBM	Supported	SmartLogger V300R001C00SPC110 and later versions

 Copyright © Huawei Technologies Co., Ltd.

Vendor	Model	Export Limitation	Remarks
Janitza	UMG104	-	SmartLogger V300R001C00SPC110 and later versions
Janitza	UMG604	Supported	SmartLogger V300R001C00SPC110 and later versions
Janitza	UMG96-S2	-	SmartLogger V300R001C00SPC110 and later versions
Lead	LD-C83	-	SmartLogger V300R001C00SPC110 and later versions
MingHua	CRDM-830	-	SmartLogger V300R001C00SPC110 and later versions
Mitsubishi	EMU4-BD1-MB	Supported **NOTE** ● Not applicable to single-phase power scenarios. ● When the power meter connects to the SmartLogger, an external 120-ohm resistor needs to be connected to the RS485 bus of the power meter. For details, see the user manual of the power meter.	SmartLogger V300R001C00SPC110 and later versions
Mitsubishi	M8FM-N3LTR	-	SmartLogger V300R001C00SPC110 and later versions
Mitsubishi	ME110NSR-MB	-	SmartLogger V300R001C00SPC110 and later versions
Mitsubishi	ME110SR-MB	-	SmartLogger V300R001C00SPC110 and later versions
Mitsubishi	ME110SSR-MB	-	SmartLogger V300R001C00SPC110 and later versions

 Copyright © Huawei Technologies Co., Ltd.

Vendor	Model	Export Limitation	Remarks
Mitsubishi	ME110SSR-4 APH	-	SmartLogger V300R001C00SPC110 and later versions
NARUN	PD510	-	SmartLogger V300R001C00SPC110 and later versions
NetBiter	CEWE	-	SmartLogger V300R001C00SPC110 and later versions
People	RM858E	-	SmartLogger V300R001C00SPC110 and later versions
REAL ENERGY SYSTEM	PRISMA-310 A	-	SmartLogger V300R001C00SPC110 and later versions
Rishabh	LM1360	Supported	SmartLogger V300R023C10SPC625 and later versions
Schneider	PM1200	-	SmartLogger V300R001C00SPC110 and later versions
Schneider	PM2xxx	-	SmartLogger V300R001C00SPC110 and later versions
Schneider	PM5100	-	SmartLogger V300R001C00SPC110 and later versions
Schneider	PM5300	-	SmartLogger V300R001C00SPC110 and later versions
SFERE	PD194Z	-	SmartLogger V300R001C00SPC110 and later versions

 Copyright © Huawei Technologies Co., Ltd.

Vendor	Model	Export Limitation	Remarks
Socomec	COUNTIS E43	Supported **NOTE** ● Not applicable to single-phase power scenarios. ● When the power meter connects to the SmartLogger, an external 120-ohm resistor needs to be connected to the RS485 bus of the power meter. For details, see the user manual of the power meter.	SmartLogger V300R001C00SPC110 and later versions
Toshiba	S2MS	-	SmartLogger V300R001C00SPC110 and later versions
Wave Energy	PWM-72	-	SmartLogger V300R001C00SPC110 and later versions
WEG	MMW03-M22CH	Supported	SmartLogger V300R001C00SPC110 and later versions
YADA	YDS60-80	Supported **NOTE** Applicable only to three-phase power scenarios.	SmartLogger V300R023C00SPC154 and later versions
YADA	YDS70-C16	Supported **NOTE** Applicable only to single-phase power scenarios.	SmartLogger V300R023C00SPC154 and later versions
YADA	YDS60-C24	Supported **NOTE** Applicable only to three-phase power scenarios.	SmartLogger V300R023C00SPC154 and later versions
Linyang	DDSU71	Supported **NOTE** Applicable only to single-phase power scenarios.	SmartLogger V300R023C10SPC551 and later versions
Linyang	DTSU71	Supported **NOTE** Applicable only to three-phase power scenarios.	SmartLogger V300R023C10SPC551 and later versions

 Copyright © Huawei Technologies Co., Ltd.

Vendor	Model	Export Limitation	Remarks
Linyang	DTSU71C	-	SmartLogger V300R023C10SPC625 and later versions
Wisdom	DDSU1079-CT	Supported **NOTE** Applicable only to single-phase power scenarios.	SmartLogger V300R023C10SPC551 and later versions
Wisdom	DHSU1079-CT	Supported **NOTE** Applicable only to three-phase power scenarios.	SmartLogger V300R023C10SPC551 and later versions
Wisdom	DHSU1079-ZT	Supported	SmartLogger V300R023C10SPC625 and later versions

Table 8-2 Supported EMIs

Vendor	Model	EMI Information
ABB	VSN800-12	Total irradiance, ambient temperature, and PV module temperature
	VSN800-14	Total irradiance, ambient temperature, PV module temperature, wind direction, and wind speed
Gill MetPak Pro	Gill MetPak Pro	Total irradiance, ambient temperature, PV module temperature, wind direction, and wind speed
Hukseflux SRx	Hukseflux SRx	Total irradiance and ambient temperature
Ingenieurbüro Si-RS485TC	Ingenieurbüro Si-RS485TC	Total irradiance, ambient temperature, PV module temperature, and wind speed
Kipp&Zonen	SMPx series	Total irradiance and ambient temperature

 Copyright © Huawei Technologies Co., Ltd.

Vendor	Model	EMI Information
Lufft	WSx-UMB	Total irradiance, ambient temperature, wind direction, and wind speed
	WSx-UMB (external sensors)	Total irradiance, ambient temperature, PV module temperature, wind direction, and wind speed
Meier-NT ADL-SR	Meier-NT ADL-SR	Total irradiance, ambient temperature, PV module temperature, and wind speed
MeteoControl	SR20-D2	Total irradiance and ambient temperature
RainWise	PVmet-150	Total irradiance, ambient temperature, and PV module temperature
	PVmet-200	Total irradiance, ambient temperature, PV module temperature, wind direction, and wind speed
Soluzione Solare	SunMeter	Total irradiance and ambient temperature
Jinzhou Licheng	Jinzhou Licheng	Total irradiance, ambient temperature, PV module temperature, wind direction, and wind speed
Jinzhou Solargiga	PC-4 (V2.11)	Total irradiance, ambient temperature, PV module temperature, wind direction, and wind speed
Handan	RYQ-3	Total irradiance, ambient temperature, PV module temperature, wind direction, and wind speed

 Copyright © Huawei Technologies Co., Ltd.

Vendor	Model	EMI Information
Sensor ADAM **NOTE** The sensor-type EMI (current-type or voltage-type) communicates with the SmartLogger through the ADAM analog-to-digital converter.	-	-

8.14 How Do I Check the SIM Card Status?

Choose **Overview** > **Mobile Data** to check the SIM card status.

Table 8-3 SIM card status

Parameter	Status	Description
4G module status	Card absent	No SIM card is detected. Insert a SIM card.
	Failed to register the card.	1. Check whether the SIM card account is in arrears. If yes, top up the account. 2. Check whether the network quality is poor. If yes, use a SIM card of another carrier with good signal quality. 3. Check whether the SIM card has been bound to another device. If yes, unbind the SIM card from the device or replace the SIM card.
	• Not connected • The card is in position.	The SmartLogger is trying to set up a dial-up connection. Wait for the connection to be set up.
	Connected	The dial-up connection is set up successfully.
	Enter the PIN.	The SIM card has been set to require a personal identification number (PIN). Contact the carrier of the SIM card for the PIN. Choose **Settings** > **Wireless Network** and enter the correct PIN.
	Enter the PUK.	If the number of incorrect PIN attempts exceeds the upper limit, you need to enter the PIN unblocking key (PUK). Contact the carrier of the SIM card for the PUK. Choose **Settings** > **Wireless Network** and enter the correct PUK.

 Copyright © Huawei Technologies Co., Ltd.

Parameter	Status	Description
Traffic status	Normal	The used traffic does not exceed the monthly traffic package, and the remaining traffic is sufficient.
	Warning	The used traffic exceeds 80% of the monthly traffic package, and the remaining traffic is insufficient.
	Used up	The used traffic exceeds the monthly traffic package. Traffic is used up. Top up the SIM card account immediately.
	No package configured	Choose **Settings** > **Wireless Network** and configure a monthly traffic package.

8.15 How Do I Use Mobile Network Sharing?

Remotely Accessing the WebUI over a Mobile Network

NOTE

A 4G SmartLogger supports remote access to the SmartLogger WebUI over the built-in 4G wireless communication.

Step 1 Insert a SIM card with a fixed IP address into the SIM card slot of the SmartLogger. Choose **Over View** > **Mobile Data** to check the SIM card status and ensure that the 4G wireless communication is normal.

Step 2 Choose **Settings** > **Other Parameters** and set **Mobile network sharing** to **Enable**.

NOTICE

- After this function is enabled, the SmartLogger is directly exposed to the public network and is vulnerable to network attacks.
- Data that is actively sent through email and FTP is preferentially transmitted through 4G wireless communication. If the function of actively sending data through email and FTP is used, ensure that the corresponding destination server can be connected through 4G wireless communication.

 Copyright © Huawei Technologies Co., Ltd.

Figure 8-4 Other parameters

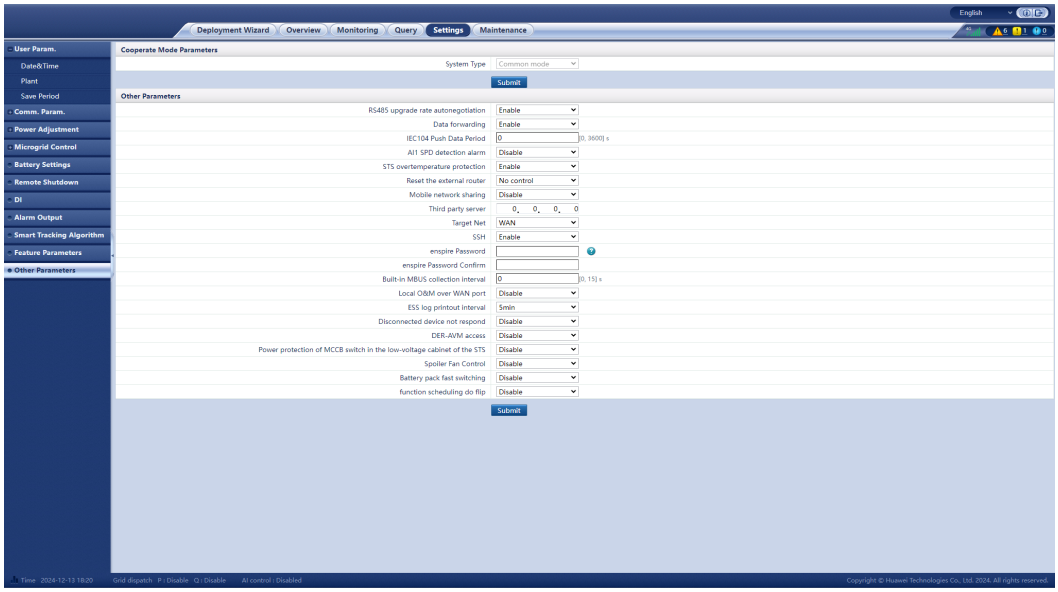

Step 3 In the address box of a browser, enter **https://XX.XX.XX.XX** (*XX.XX.XX.XX* is the fixed IP address of the SIM card) and press **Enter**. On the login page that is displayed, log in to the WebUI.

----End

Sharing a Mobile Network with Other Devices

NOTE

A 4G SmartLogger supports the sharing of the built-in 4G network with other devices for Internet access.

Step 1 Connect the network cable of another device to the WAN port of the SmartLogger.

Step 2 Choose **Settings** > **Other Parameters** and set **Mobile network sharing** to **Enable**.

NOTICE

- After this function is enabled, the SmartLogger is directly exposed to the public network and is vulnerable to network attacks.
- Data that is actively sent through email and FTP is preferentially transmitted through 4G wireless communication. If the function of actively sending data through email and FTP is used, ensure that the corresponding destination server can be connected through 4G wireless communication.

Figure 8-5 Other parameters

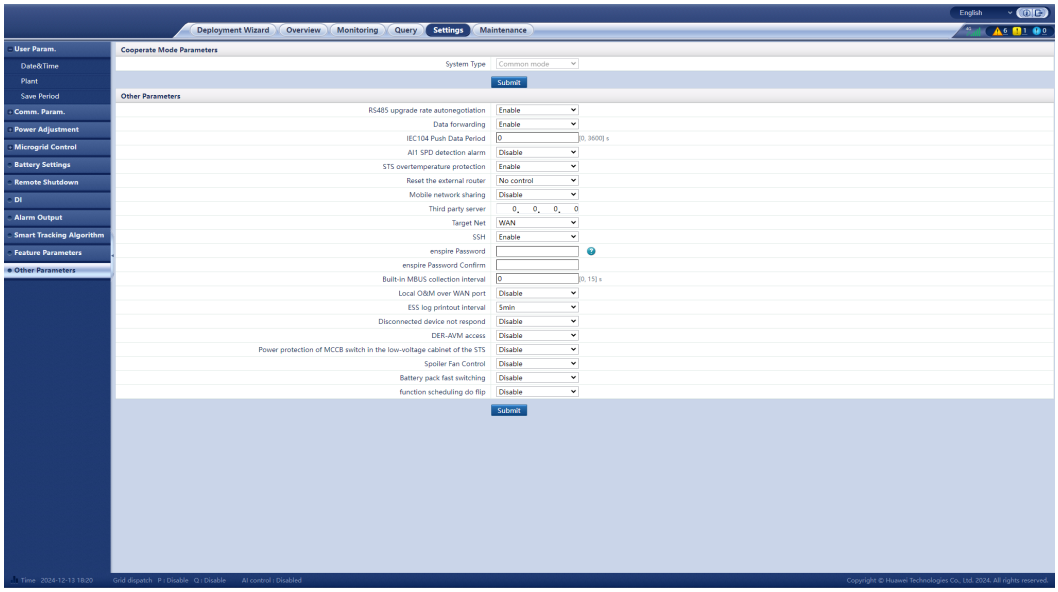

Step 3 Choose **Settings** > **Comm. Param. > Wired Network** and set network parameters for other devices.

1. IP address of the device connected to the shared network: The IP address must be in the same network segment as that of the SmartLogger and does not conflict with other devices.
2. Subnet mask of the device connected to the shared network: Set it to the subnet mask of the SmartLogger.
3. Gateway of the device connected to the shared network: Set it to the IP address of the SmartLogger.
4. Third-party server IP address: IP address of the third-party server that can be accessed through the 4G network. You need to set the IP address of the third-party server so that other devices that share the built-in 4G network can connect to the third-party server.

NOTE

To query the network parameters of the SmartLogger, choose **Settings** > **Comm. Param. > Wired Network**.

----End

8.16 WebUI Allows Login Only in Chinese or Prompts to Switch to Chinese After Login

If the WebUI uses a language other than Chinese and the SmartLogger detects that an inverter sold only in Chinese Mainland is connected, a message is displayed indicating that the WebUI allows login only in Chinese or prompting to switch to Chinese after login.

Figure 8-6 WebUI allows login only in Chinese

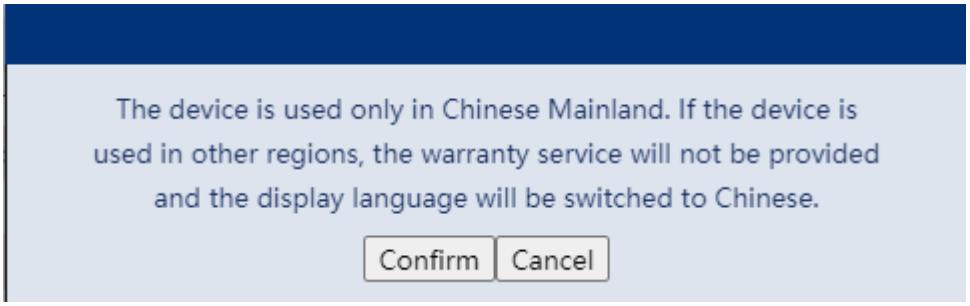

Figure 8-7 WebUI prompts to switch to Chinese

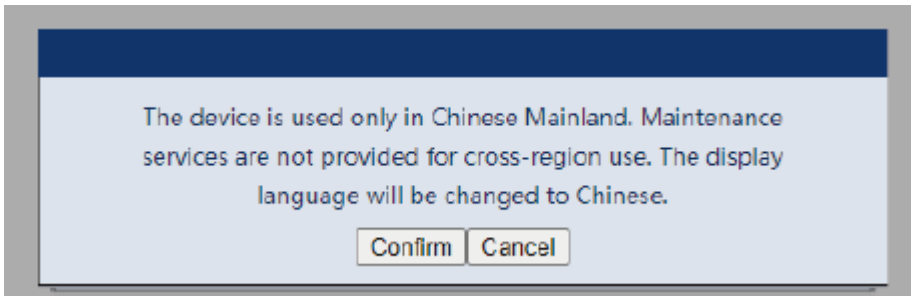

8.17 How Do I Identify the Meter Wiring Direction on the SmartLogger?

- Correct wiring: When the plant feeds electricity to the grid, the active power of the meter is a negative value. When the plant draws electricity from the grid, the active power of the meter is a positive value.
- Reverse wiring: When the plant feeds electricity to the grid, the active power of the meter is a positive value. When the plant draws electricity from the grid, the active power of the meter is a negative value. Negative wiring may occur.

8.18 Resetting Password

Role	Description
Administrator	If you hold down the RST button for 10s to 20s, the SmartLogger enters the safe mode. In this case, the device configuration parameters are retained, but personal privacy and sensitive data, including the login password and email address, are cleared.
Non-administrator	The password of a non-administrator account must be reset using the administrator account. The administrator resets the password and enters the initial password. The user logs in to the system using the initial password provided by the administrator. After the login, the user is forced to change the password.

 Copyright © Huawei Technologies Co., Ltd.

9 Technical Specifications

9.1 Technical Specifications of the SmartLogger

Device Management

Parameter	Specifications
Number of solar inverters	• SmartLogger3000A: can connect to a maximum of 80 solar inverters. • SmartLogger3000B: can connect to a maximum of 150 solar inverters. • SmartLogger3000C: can connect to a maximum of 80 solar inverters.
Communications mode	RS485, ETH, MBUS (optional), 4G (optional), and SFP (optional)
Maximum communication distance	• RS485: 1000 m • ETH: 100 m • MBUS (multi-core cable): 1000 m; MBUS (single-core cable): 400 m (The three-phase cables must be bound at 1 m intervals) 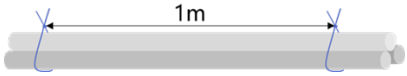 • Optical fiber (single-mode, 1310 nm optical module): 10,000 m (with the 1000M optical module); 12,000 m (with the 100M optical module)

 Copyright © Huawei Technologies Co., Ltd.

Common Specifications

Parameter	Specifications
Power adapter	● AC input: 100–240 V, 50/60 Hz ● DC output: 12 V, 2 A
DC power supply	24 V, 0.8 A
Power consumption	● SmartLogger3000A: 8 W (typical) ● SmartLogger3000B: 9 W (typical) ● SmartLogger3000C: 8 W (typical) ● SmartLogger3000B + SmartModule1000A: 10 W (typical) ● 15 W (maximum)
Dimensions (W x H x D)	● 259 mm x 160 mm x 59 mm (including mounting ears) ● 225 mm x 160 mm x 44 mm (excluding mounting ears)
Net weight	2 kg
Operating temperature	–40°C to +60°C
Storage temperature	–40°C to +70°C
Relative humidity	5%–95% RH
IP rating	IP20
Installation mode	Installed on a wall or guide rail
Highest operating altitude	4000 m
Pollution degree	2
Corrosion level	Class B

Ports

Parameter	Specifications
Ethernet electrical port (WAN and LAN)	2 PCS; 10M/100M/1000M auto-sensing
Ethernet optical port (SFP)	2 PCS; supports 100M/1000M SFP/eSFP optical modules
MBUS port	1 PCS; supports a maximum AC input voltage of 800 V

 Copyright © Huawei Technologies Co., Ltd.

Parameter	Specifications
RS485 (COM) port	3 PCS; supported baud rates: 1200 bit/s, 2400 bit/s, 4800 bit/s, 9600 bit/s, 19,200 bit/s, and 115,200 bit/s
USB	USB2.0
Output power port	One port; DC output: 12 V, 0.1 A
Digital input (DI)	Four ports; passive dry contact signal access
Digital output (DO)	Two ports; relay dry contact outputs, with NO or NC contacts; 12 V/0.5 A signal voltage
Analog input (AI)	Four ports; AI1: 0–10 V voltage (passive); AI2–AI4: 4–20 mA or 0–20 mA input current (passive)
4G antenna port (4G)	One port; SMA-K (external screw inner hole) port, used with an antenna that has the SMA-J (internal screw inner pin) port

Wireless Communication

Parameter	Specifications
4G/3G/2G	The SmartLogger3000A01CN supports the following frequency bands: ● LTE FDD: B1, B3, B8 ● LTE TDD: B38, B39, B40, B41 ● WCDMA: B1, B5, B8, B9 ● TD-SCDMA: B34, B39 ● GSM: 900 MHz/1800 MHz
	The SmartLogger3000A01EU and SmartLogger3000A03EU support the following frequency bands: ● LTE FDD: B1, B3, B7, B8, B20 ● LTE TDD: B38, B40 ● WCDMA: B1, B5, B8 ● GSM: 900 MHz/1800 MHz
	The SmartLogger3000A01NH supports the following frequency bands: ● LTE FDD: B1, B3, B8, B18, B19, B26 (only Tokyo, Nagoya, and Osaka support B3) ● LTE TDD: B41

 Copyright © Huawei Technologies Co., Ltd.

Parameter	Specifications
	The SmartLogger3000A01KR supports the following frequency bands: ● LTE FDD: B1, B3, B5, B7 ● WCDMA: B1
	The SmartLogger3000A01AU supports the following frequency bands: ● LTE FDD: B1, B2, B3, B4, B5, B7, B8, B28 ● LTE TDD: B40 ● WCDMA: B1, B2, B5, B8 ● GSM: 850 MHz/900 MHz/1800 MHz/1900 MHz
	The SmartLogger3000C01 supports the following frequency bands: ● LTE FDD: B1, B3, B7, B8, B20 ● LTE TDD: B38, B40 ● WCDMA: B1, B5, B8 ● GSM: 900 MHz/1800 MHz
WLAN (local maintenance using app)	2.4G

RF Bands of the 4G Module (SmartLogger3000A01EU, SmartLogger3000A03EU, and SmartLogger3000C01)

Frequency Band	Tx	Rx
WCDMA Band 1	1920–1980 MHz	2110–2170 MHz
WCDMA Band 5	824–849 MHz	869–894 MHz
WCDMA Band 8	880–915 MHz	925–960 MHz
GSM 900	880–915 MHz	925–960 MHz
GSM 1800	1710–1785 MHz	1805–1880 MHz
LTE Band 1	1920–1980 MHz	2110–2170 MHz
LTE Band 3	1710–1785 MHz	1805–1880 MHz
LTE Band 5	824–849 MHz	869–894 MHz
LTE Band 7	2500–2570 MHz	2620–2690 MHz
LTE Band 8	880–915 MHz	925–960 MHz
LTE Band 20	832–862 MHz	791–821 MHz

 Copyright © Huawei Technologies Co., Ltd.

Frequency Band	Tx	Rx
LTE Band 38	2570–2620 MHz	
LTE Band 40	2300–2400 MHz	

Output Power of the 4G Module (SmartLogger3000A01EU, SmartLogger3000A03EU, and SmartLogger3000C01)

Frequency Band		Standard Value (Unit: dBm)	Remarks (Unit: dB)
GSM 900	GMSK (1Tx Slot)	33	±2
	8PSK (1Tx Slot)	27	±3
GSM 1800	GMSK (1Tx Slot)	30	±2
	8PSK (1Tx Slot)	26	±3
WCDMA Band 1		24	+1/–3
WCDMA Band 5		24	+1/–3
WCDMA Band 8		24	+1/–3
LTE Band 1		23	±2
LTE Band 3		23	±2
LTE Band 5		23	±2
LTE Band 7		23	±2
LTE Band 8		23	±2
LTE Band 20		23	±2
LTE Band 38		23	±2
LTE Band 40		23	±2

WLAN

Parameter	Specifications
Frequency band	2.4 GHz: 2.4–2.4835 GHz
Gain	2.4 GHz: 2.85 dBi
Transmit power	2.4 GHz: 1 x 100 mW
Maximum throughput	2.4 GHz: 65 Mbit/s

 Copyright © Huawei Technologies Co., Ltd.

Parameter	Specifications
Single/Dual band mode	Single
MIMO	2.4 GHz frequency band: 1T1R
Maximum number of online users	6
Polarization mode	Linear
Directivity	Multi-dimensional
Protocol standard	802.11b/g/n
Bandwidth	20 MHz
Maximum transmit power	≤ 20 dBm EIRP

9.2 Technical Specifications of the SmartModule

Device Management

Item	Specifications
Communications mode	RS485, ETH
Maximum communication distance	• RS485:1000 m • ETH: 100 m

Common Specifications

Item	Specifications
DC power supply	• DC 12 V: DC 2.0 power socket male connector • DC 24 V: cord end terminal
Power consumption	Typical: 4 W; maximum: 5 W
Dimensions (H x W x D)	• Including mounting ears: 160 mm x 179 mm x 59 mm • Without mounting ears: 160 mm x 125 mm x 44 mm
Net weight	1 kg
Operating temperature	–40°C to +60°C
Storage temperature	–40°C to +70°C
Humidity	5%–95% RH

 Copyright © Huawei Technologies Co., Ltd.

Item	Specifications
Ingress protection rating	IP20
Installation mode	Installed on a wall or guide rail
Maximum operating altitude	4000 m
Pollution level	Level 2
Corrosion level	Class B

Ports

Item	Specifications
Ethernet electrical port (GE)	Four 10M/100M/1000M auto-sensing ports
RS485 port (COM)	Three ports; supported baud rates: 1200 bps, 2400 bps, 4800 bps, 9600 bps, 19,200 bps, 115,200 bps
Output power port	One port; DC output: 12 V, 0.1 A
Digital input (DI)	Four ports; passive dry contact signal access
PT port (PT)	Two ports; support the access of signals from a 3-wire or 2-wire PT100/PT1000 temperature sensor
Analog input (AI) port	Four ports; AI1: 0–10 V voltage (passive); AI2–AI4: 4–20 mA or 0–20 mA input current (passive)

 Copyright © Huawei Technologies Co., Ltd.

A Product User Lists

Table A-1 User list

Login Mode	SmartLogger Version	User Name	Initial Password
App	Factory version earlier than V300R001C00	Installer	00000a
		User	
	Upgraded to V300R023C00 or later	installer	00000a
		user	
	Factory version V300R023C00 or later	installer	No initial password is available. You can set a password as required.
		user	
WEB	Factory version earlier than V300R023C00	admin	Changeme
	Upgraded to V300R023C00 or later	installer	No initial password is available. You can set a password as required.
		admin	Changeme
	Factory version V300R023C00 or later	installer	No initial password is available. You can set a password as required.

Table A-2 Second challenge authentication

Authentication Mode	User Name	Initial Password
SmartLogger authentication by the management system	emscomm	/EzFp+2%r6@IxSCv

 Copyright © Huawei Technologies Co., Ltd.

Authentication Mode	User Name	Initial Password
SmartModule authentication by the SmartLogger	SmoduleAdmin	/EzFp+2%r6@IxSCv

Table A-3 Operating system user list

User Name	Initial Password
enspire	Changeme
root	Changeme
prorunacc	No initial password
bin	No initial password
daemon	No initial password
nobody	No initial password
sshd	No initial password

Copyright © Huawei Technologies Co., Ltd.

B Domain Name List of Management Systems

For details about management system domain names, see **Domain Name List of Management Systems** in the **FusionSolar App User Manual**.

 Copyright © Huawei Technologies Co., Ltd.

C Port Number List

Table C-1 Port numbers

Source Device	SmartLogger		
Source IP Address	Ethernet 1 IP address		
Source Port	Dynamic allocation		
Destination Device	SmartPVMS		
Destination IP Address	SmartPVMS IP address		
Destination Port (Listening)	2121–2130	• 10000–20000 • 35000–50000	27250
Protocol	FTPS	FTPS	Modbus-TCP
Port Description	The SmartLogger, functioning as a client, connects to the FTP server of the management system (SmartPVMS). This channel is used for command transmission and is disabled by default.	The SmartLogger, functioning as a client, connects to the FTP server of the management system (SmartPVMS). This channel is used for data and file transmission and is disabled by default.	The SmartLogger, functioning as a client, connects to the management system (SmartPVMS) to query data and set parameters over Modbus. This function is disabled by default.

 Copyright © Huawei Technologies Co., Ltd.

NOTE

- If a third-party management system connects to the SmartLogger over Modbus TCP, the SmartLogger port No. is 502, which is used to query and set data between the SmartLogger and the third-party management system.
- If a third-party management system connects to the SmartLogger over IEC104, the SmartLogger port number is 2404, which is used to query and set data between the SmartLogger and the third-party management system.
- If the SmartLogger connects to a third-party FTP server over FTP, the common port number is 21, which is used to periodically upload performance data to the third-party FTP server.
- If the SmartLogger connects to a third-party email server over SMTP, the common port number is 25, 465, or 587, which is used to send emails to the email server.
- If the SmartLogger connects to a third-party NTP server over NTP, the common port number is 123, which is used for time synchronization with the NTP server.
- If the SmartLogger connects to a remote output server of Japan Electric Power Company over HTTPS, the common port number is 443, which is used to synchronize the scheduling table with the electric power company.

 Copyright © Huawei Technologies Co., Ltd.

D Certificate Management and Maintenance

D.1 Initial Certificate Risk Disclaimer

The Huawei-issued certificates preconfigured on Huawei devices during manufacturing are mandatory identity credentials for Huawei devices. The disclaimer statements for using the certificates are as follows:

1. Huawei's initial certificates are used only in the deployment phase, for establishing initial security channels between devices and the customer's network. Huawei does not promise or guarantee the security of the initial certificates.

2. Customers shall bear consequences of all security risks and security incidents arising from using Huawei's initial certificates as service certificates.

3. Huawei's initial certificates are valid from the manufacturing date until December 2099.

4. Services using an initial certificate will be interrupted when the certificate expires.

5. It is recommended that customers deploy a PKI system to issue certificates for devices and software on the live network and manage the lifecycle of the certificates. To ensure security, certificates with short validity periods are recommended.

D.2 Application Scenarios of Initial Certificates

File Path and Name	Application Scenario	Replacement
/mnt/log/smodule_ca.crt	Authenticates the validity of the peer extension module for communication with the TLS extension module.	For details about how to replace a certificate, contact technical support engineers to obtain the corresponding security maintenance manual.
/mnt/log/smodule_server.crt		

 Copyright © Huawei Technologies Co., Ltd.

File Path and Name	Application Scenario	Replacement
/mnt/home/cert/web/server.crt	Authenticates the validity of the peer web module to be connected.	
/mnt/log/ca_1.crt	Authenticates the validity of the peer NMS for communication through Modbus-TCP.	
/mnt/log/client_1.crt		
/mnt/log/ca_2.crt		
/mnt/log/client_2.crt		
/mnt/log/client2_ca.crt		
/mnt/log/client2.crt		
/mnt/log/ca_new.crt		
/mnt/log/client_new.crt		
/mnt/log/tcpmb_server_cert/ca.crt	Authenticates the validity of the peer mobile app for communication through Modbus-TCP.	Certificate replacement is not supported.
/mnt/log/tcpmb_server_cert/tomcat_client.crt		
/mnt/app/cert/default/north_tcp_mb_cert_s/ca.crt		For details about how to replace a certificate, contact technical support engineers to obtain the corresponding security maintenance manual.
/mnt/app/cert/default/north_tcp_mb_cert_s/tomcat_client.crt		
/mnt/log/cmu_ca.crt	Authenticates the validity of the peer CMU for communication through Modbus-TCP.	For details about how to replace a certificate, contact technical support engineers to obtain the corresponding security maintenance manual.
/mnt/log/cmu_client.crt		
/mnt/log/ca_new.crt	Authenticates the validity of the peer STS, PCS, or inverter for communication through Modbus-TCP.	
/mnt/log/client_new.crt		
/mnt/log/ppc_client.crt	Authenticates the validity of the peer end when the SPPC is connected.	
/mnt/log/ppc_ca.crt		
/mnt/home/cert/web/server.crt	Authenticates the validity of the peer web module to be connected.	
/mnt/app/cert/default/north_tcp_mb_cert_c/ca.crt	Authenticates the validity of the peer SACU for communication with the SACU through Modbus-TCP.	
/mnt/app/cert/default/north_tcp_mb_cert_c/tomcat_client.crt		

 Copyright © Huawei Technologies Co., Ltd.

File Path and Name	Application Scenario	Replacement
/mnt/app/cert/default/bin_cert_s/ca.crt	Authenticates the validity of the peer liquid cooling controller (LCC) for communication with the LCC.	
/mnt/app/cert/default/bin_cert_s/tomcat_client.crt		

 Copyright © Huawei Technologies Co., Ltd.

E EMC Information

Class A Equipment of Group 1

This device is class A equipment of group 1.

- Class A equipment: Class A equipment is the equipment suitable for use in all locations other than those allocated to residential environments and those directly connected to a low voltage power supply network which supplies buildings used for domestic purposes.
- Group 1 equipment: Group 2 contains all industrial, scientific, and medical (ISM) RF equipment in which radio-frequency energy in the frequency range of 9 kHz to 400 GHz is intentionally generated and used or only used locally, in the form of electromagnetic radiation, inductive and/or capacitive coupling, for the treatment of material, for inspection/analysis purposes, or for transfer of electromagnetic energy. Group 1 contains all equipment which is not classified as group 2 equipment.

NOTE

This document applies to the following models:

- SmartLogger3000A03EU
- SmartLogger3000B02EU

Class B Equipment of Group 1

This device is class B equipment of group 1.

- Class B equipment: Equipment suitable for use in locations in residential environments and in establishments directly connected to a low voltage power supply network which supplies buildings used for domestic purposes.
- Group 1 equipment: Group 2 contains all industrial, scientific, and medical (ISM) RF equipment in which radio-frequency energy in the frequency range of 9 kHz to 400 GHz is intentionally generated and used or only used locally, in the form of electromagnetic radiation, inductive and/or capacitive coupling, for the treatment of material, for inspection/analysis purposes, or for transfer of electromagnetic energy. Group 1 contains all equipment which is not classified as group 2 equipment.

 Copyright © Huawei Technologies Co., Ltd.

NOTE

This statement applies to the following codes:

- SmartLogger3000A01EU
- SmartLogger3000A01AU
- SmartLogger3000A00GL
- SmartLogger3000C01

Copyright © Huawei Technologies Co., Ltd.

F Contact Information

If you have any questions about this product, please contact us.

https://digitalpower.huawei.com

Path: **About Us** > **Contact Us** > **Service Hotlines**

To ensure faster and better services, we kindly request your assistance in providing the following information:

- Model
- Serial number (SN)
- Software version
- Alarm ID or name
- Brief description of the fault symptom

 Copyright © Huawei Technologies Co., Ltd.

NOTE

EU Representative Information: Huawei Technologies Hungary Kft.
Add.: HU-1133 Budapest, Váci út 116-118., 1. Building, 6. floor.
Email: hungary.reception@huawei.com

Copyright © Huawei Technologies Co., Ltd.

G Digital Power Customer Service

https://digitalpower.huawei.com/robotchat/

Copyright © Huawei Technologies Co., Ltd.

H Acronyms and Abbreviations

A	
AC	Alternating Current
AI	Analog Input
AO	Analog Output
APP	Application
B	
BMU	Battery Monitoring Unit
C	
COM	Communication
CPE	Customer Premises Equipment
CMU	Central Monitoring Unit
D	
DC	Direct Current
DI	Digital Input

 Copyright © Huawei Technologies Co., Ltd.

DO	Digital Output
E	
EMI	Environmental Monitoring Instrument
ETH	Ethernet
ESU	Energy Storage Unit
ESC	Smart Rack Controller
ESR	Battery Rack
ESM	Battery Pack
G	
GE	Gigabit Ethernet
GND	Ground
H	
HVAC	Heating, Ventilation and Air Conditioning
L	
LAN	Local Area Network
LED	Light-emitting Diode
LTE	Long Term Evolution
M	
MBUS	Monitoring bus

 Copyright © Huawei Technologies Co., Ltd.

N

NC	Normally Closed
NO	Normally Open

P

POE	Power over Ethernet
PCS	Smart PCS

R

RST	Reset
RSTP	Rapid Spanning Tree Protocol

S

SFP	Small Form-factor Pluggable
STP	Spanning Tree Protocol
SOC	State of Charge
SOH	State of Health

T

TCU	Temperature Control Unit

U

USB	Universal Serial Bus

W

WAN	Wide Area Network
WEEE	Waste Electrical and Electronic Equipment