SmartGuard-63A-(T0, AUT0)

User Manual

Issue	10
Date	2026-06-30

HUAWEI DIGITAL POWER TECHNOLOGIES CO., LTD.

Copyright © Huawei Digital Power Technologies Co., Ltd. 2026. All rights reserved.

No part of this document may be reproduced or transmitted in any form or by any means without prior written consent of Huawei Digital Power Technologies Co., Ltd.

Trademarks and Permissions

HUAWEI and other Huawei trademarks are the property of Huawei Technologies Co., Ltd.
All other trademarks and trade names mentioned in this document are the property of their respective holders.

Notice

The purchased products, services and features are stipulated by the contract made between Huawei Digital Power Technologies Co., Ltd. and the customer. All or part of the products, services and features described in this document may not be within the purchase scope or the usage scope. Unless otherwise specified in the contract, all statements, information, and recommendations in this document are provided "AS IS" without warranties, guarantees or representations of any kind, either express or implied. The information in this document is subject to change without notice. Every effort has been made in the preparation of this document to ensure accuracy of the contents, but all statements, information, and recommendations in this document do not constitute a warranty of any kind, express or implied.

Huawei Digital Power Technologies Co., Ltd.

Address: Office 01, 39th Floor, Block A, Antuoshan Headquarters Towers, 33 Antuoshan 6th Road, Futian District, Shenzhen, 518043, P.R.C.

Website: https://digitalpower.huawei.com

More Information

Huawei Digital Power Information Experience Center

https://info.support.huawei.com/Energy/info

About This Document

Purpose

This document describes the SmartGuard-63A-T0 and SmartGuard-63A-AUT0 in terms of safety precautions, product introduction, installation, electrical connections, power-on and commissioning, maintenance, and technical specifications. Read this document carefully before installing and using the Smart Guard.

Statement

In this document, LUNA only refers to a specific model of Huawei Smart String ESS.

Intended Audience

The document is intended for:

- Sales engineers
- System engineers
- Technical support engineers

Symbol Conventions

The symbols that may be found in this manual are defined as follows.

Symbol	Description
DANGER	Indicates a hazard with a high level of risk which, if not avoided, will result in death or serious injury.
WARNING	Indicates a hazard with a medium level of risk which, if not avoided, could result in death or serious injury.
CAUTION	Indicates a hazard with a low level of risk which, if not avoided, could result in minor or moderate injury.

 Copyright © Huawei Digital Power Technologies Co., Ltd.

Symbol	Description
NOTICE	Indicates a potentially hazardous situation which, if not avoided, could result in equipment damage, data loss, performance deterioration, or unanticipated results. NOTICE is used to address practices not related to personal injury.
NOTE	Supplements the important information in the main text. NOTE is used to address information not related to personal injury, equipment damage, and environment deterioration.

Change History

Changes between document issues are cumulative. The latest document issue contains all the changes in earlier issues.

Issue 10 (2026-06-30)

Updated **E Certificate Management and Maintenance**.

Issue 09 (2026-03-10)

- Updated the name of the Smart Guard.
- Updated **1.2 Electrical Safety**.

Issue 08 (2025-12-30)

Added the content about inverter combination in **5.5 Installing the Inverter AC Input Power Cable**.

Issue 07 (2025-09-30)

- Changed "Energy Management Assistant" to "SmartAssistant" throughout the document.
- Updated **2.2 Networking**.
- Updated **6.2.1.2 Powering On the Smart Guard**.
- Updated **6.2.2.2 Powering On the Smart Guard**.

Issue 06 (2025-07-25)

Updated **5.1 Preparing Cables**.

Issue 05 (2025-07-01)

- Updated **2 Product Description**.
- Updated **5 Electrical Connections**.
- Updated **6.2 System Power-On**.

- Updated **6 System Commissioning**.

Issue 04 (2025-01-20)

- Updated **2 Product Description**.
- Updated **5 Electrical Connections**.
- Updated **6 System Commissioning**.
- Updated **A ATS Parameter Requirements**.

Issue 03 (2024-10-30)

- Updated **2.2 Networking**.
- Updated **5.1 Preparing Cables**.
- Added **6 System Commissioning**.

Issue 02 (2024-07-06)

- Updated **2 Product Description**.
- Updated **5 Electrical Connections**.
- Updated **6 System Commissioning**.
- Updated **7 System Maintenance**.

Issue 01 (2024-05-06)

This issue is the first official release.

Contents

About This Document ii

1 Safety Information 1

1.1 Personal Safety 2
1.2 Electrical Safety 4
1.3 Environment Requirements 7
1.4 Mechanical Safety 9

2 Product Description 13

2.1 Model Number Description 13
2.2 Networking 14
2.3 Appearance 23
2.4 Working Principles 25
2.5 Working Modes 25
2.6 Label Description 26

3 Storage Requirements 29

4 System Installation 30

4.1 Installation Modes 30
4.2 Installation Position 30
4.2.1 Site Selection Requirements 30
4.2.2 Clearance Requirements 31
4.2.3 Angle Requirements 32
4.3 Preparing Tools 33
4.4 Pre-installation Check 34
4.5 Moving the Smart Guard 35
4.6 Wall Mounting 35

5 Electrical Connections 38

5.1 Preparing Cables 39
5.2 Connecting a PE Cable 44
5.3 Opening the Maintenance Compartment 45
5.4 Installing the Grid AC Output Power Cable 47
5.5 Installing the Inverter AC Input Power Cable 49
5.6 Installing the Backup Load Output Power Cable 54

5.7 Installing the Non-backup Load Output Power Cable....58
5.8 Installing the Smart Guard Signal Cables....61
5.9 Installing the Smart Guard Signal Cables (SmartAssistant)....63
6 System Commissioning....69
6.1 Check Before Power-On....69
6.2 System Power-On....70
6.2.1 Method 1: Power-On in On-Grid Mode or by Starting the Generator....70
6.2.1.1 Closing the Maintenance Compartment....70
6.2.1.2 Powering On the Smart Guard....72
6.2.1.3 Powering On Loads....74
6.2.2 Method 2: Power-On in Off-Grid Mode....75
6.2.2.1 Closing the Maintenance Compartment....75
6.2.2.2 Powering On the Smart Guard....77
6.2.2.3 Powering On Loads....79
6.3 Device Commissioning....79
7 System Maintenance....81
7.1 System Power-Off....81
7.2 Routine Maintenance....82
7.3 Alarm Reference....83
7.4 Operations on the Bypass Switch of the Smart Guard....83
7.5 Replacing the Smart Guard....85
8 Technical Specifications....86
A ATS Parameter Requirements....89
B Generator Parameter Requirements....92
C Contact Information....95
D Digital Power Customer Service....97
E Certificate Management and Maintenance....98
E.1 Initial Certificate Risk Disclaimer....98
E.2 Application Scenarios of Initial Certificates....99
E.3 Updating a Certificate....99
E.3.1 Replacing a Certificate on the Management System....99
E.3.2 Replacing a Certificate on the App....102
E.4 Querying the Validity Period of the Identity Certificate....104
F Acronyms and Abbreviations....105

1 Safety Information

Statement

Before transporting, storing, installing, operating, using, and/or maintaining the equipment, read this document, strictly follow the instructions provided herein, and follow all the safety instructions on the equipment and in this document. In this document, "equipment" refers to the products, software, components, spare parts, and/or services related to this document; "the Company" refers to the manufacturer (producer), seller, and/or service provider of the equipment; "you" refers to the entity that transports, stores, installs, operates, uses, and/or maintains the equipment.

The **DANGER**, **WARNING**, **CAUTION**, and **NOTICE** statements described in this document do not cover all the safety precautions. You also need to comply with relevant international, national, or regional standards and industry practices. **The Company shall not be liable for any consequences that may arise due to violations of safety requirements or safety standards concerning the design, production, and usage of the equipment.**

The equipment shall be used in an environment that meets the design specifications. Otherwise, the equipment may be faulty, malfunctioning, or damaged, which is not covered under the warranty. The Company shall not be liable for any property loss, personal injury, or even death caused thereby.

Comply with applicable laws, regulations, standards, and specifications during transportation, storage, installation, operation, use, and maintenance.

Do not perform reverse engineering, decompilation, disassembly, adaptation, implantation, or other derivative operations on the equipment software. Do not study the internal implementation logic of the equipment, obtain the source code of the equipment software, violate intellectual property rights, or disclose any of the performance test results of the equipment software.

The Company shall not be liable for any of the following circumstances or their consequences:

- Equipment damage due to force majeure such as earthquakes, floods, volcanic eruptions, debris flows, lightning strikes, fires, wars, armed conflicts, typhoons, hurricanes, tornadoes, and other extreme weather conditions
- Operation beyond the conditions specified in this document

- Installation or use in environments that do not comply with international, national, or regional standards
- Installation or use by unqualified personnel
- Failure to follow the operation instructions or safety precautions on the product or in this document
- Unauthorized modifications to the product or software code or removal of the product
- Damage caused during transportation by you or a third party authorized by you
- Storage conditions that do not meet the requirements specified in this document
- Failure to comply with local laws, regulations, or related standards due to the materials and tools prepared by you
- Damage caused by your or a third party's negligence, intentional breach, gross negligence, or improper operations or damage not caused by the Company

1.1 Personal Safety

DANGER

Ensure that power is off during installation. Do not install or remove a cable with power on. Transient contact between the core of the cable and the conductor will generate electric arcs or sparks, which may cause a fire or personal injury.

DANGER

Non-standard and improper operations on the energized equipment may cause fire, electric shocks, or explosion, resulting in property damage, personal injury, or even death.

DANGER

Before operations, remove conductive objects such as watches, bracelets, bangles, rings, and necklaces to prevent electric shocks.

DANGER

During operations, use dedicated insulated tools to prevent electric shocks or short circuits. The dielectric withstanding voltage level must comply with local laws, regulations, standards, and specifications.

 Copyright © Huawei Digital Power Technologies Co., Ltd.

WARNING

During operations, wear personal protective equipment such as protective clothing, insulated shoes, goggles, safety helmets, and insulated gloves.

Figure 1-1 Personal protective equipment

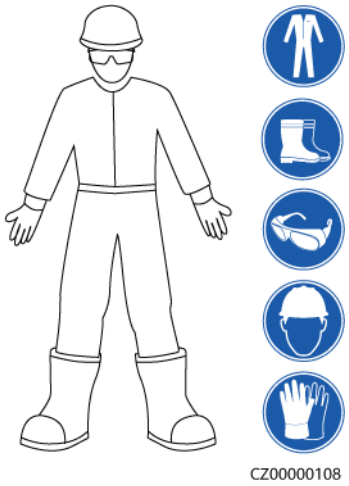

General Requirements

- Do not stop protective devices. Pay attention to the warnings, cautions, and related precautionary measures in this document and on the equipment.
- If there is a likelihood of personal injury or equipment damage during operations, immediately stop, report the case to the supervisor, and take feasible protective measures.
- Do not power on the equipment before it is installed or confirmed by professionals.
- Do not touch the power supply equipment directly or with conductors such as damp objects. Before touching any conductor surface or terminal, measure the voltage at the contact point to ensure that there is no risk of electric shock.
- Do not touch operating equipment because the enclosure is hot.
- Do not touch a running fan with your hands, components, screws, tools, or boards. Otherwise, personal injury or equipment damage may occur.
- In the case of a fire, immediately leave the building or the equipment area and activate the fire alarm or call emergency services. Do not enter the affected building or equipment area under any circumstances.

Personnel Requirements

- Only professionals and trained personnel are allowed to operate the equipment.
  - Professionals: personnel who are familiar with the working principles and structure of the equipment, trained or experienced in equipment operations, and fully aware of the sources and degree of various potential hazards in equipment installation, operation, maintenance

  - Trained personnel: personnel who are trained in technology and safety, have required experience, are aware of possible hazards on themselves in certain operations, and are able to take protective measures to minimize the hazards on themselves and other people
- Personnel who plan to install or maintain the equipment must receive adequate training, be able to correctly perform all operations, and understand all necessary safety precautions and local relevant standards.
- Only qualified professionals or trained personnel are allowed to install, operate, and maintain the equipment.
- Only qualified professionals are allowed to remove safety facilities and inspect the equipment.
- Personnel who will perform special tasks such as electrical operations, working at heights, and operations of special equipment must possess the required local qualifications.
- Only authorized professionals are allowed to replace the equipment or components (including software).
- Only personnel who need to work on the equipment are allowed to access the equipment.

1.2 Electrical Safety

DANGER

Before connecting cables, ensure that the equipment is intact. Otherwise, electric shocks or fires may occur.

DANGER

Non-standard and improper operations may result in fire or electric shocks.

DANGER

Prevent foreign matter from entering the equipment during operations. Otherwise, short circuits, equipment damage, load power derating, power failure, or personal injury may occur.

WARNING

For the equipment that needs to be grounded, install the ground cable first when installing the equipment and remove the ground cable last when removing the equipment.

 Copyright © Huawei Digital Power Technologies Co., Ltd.

WARNING

During the installation of PV strings and the inverter, the positive or negative terminals of PV strings may be short-circuited to ground if the power cables are not properly installed or routed. In this case, an AC or DC short circuit may occur and damage the inverter. The resulting device damage is not covered under any warranty.

CAUTION

Do not route cables near the air intake or exhaust vents of the equipment.

CAUTION

The components (such as power distribution boxes, circuit breakers, and cables) used for electrical connections shall comply with fire resistance and flame retardance standards (such as IEC 60670-1). The materials and structure shall meet fire safety requirements.

General Requirements

- Follow the procedures described in the document for installation, operation, and maintenance. Do not modify, retrofit, or alter the equipment without authorization (including, but not limited to, adding or removing components and cables), and do not change the installation sequence.
- Obtain approval from the national or local electric utility company before connecting the equipment to the grid.
- Observe the power plant safety regulations, such as the operation and work ticket mechanisms.
- Install temporary fences or warning ropes and hang "No Entry" signs around the operation area to keep unauthorized personnel away from the area.
- Before installing or removing power cables, turn off the switches of the equipment and its upstream and downstream switches.
- Before performing operations on the equipment, check that all tools meet the requirements and record the tools. After the operations are complete, collect all of the tools to prevent them from being left inside the equipment.
- Before installing power cables, check that cable labels are correct and cable terminals are insulated.
- When installing the equipment, use a torque tool of a proper measurement range to tighten the screws. When using a wrench to tighten the screws, ensure that the wrench does not tilt and the torque error does not exceed 10% of the specified value.
- Ensure that bolts are tightened with a torque tool and marked in red and blue after double-check. Installation personnel mark tightened bolts in blue. Quality inspection personnel confirm that the bolts are tightened and then mark them in red. (The marks must cross the edges of the bolts.)

 Copyright © Huawei Digital Power Technologies Co., Ltd.

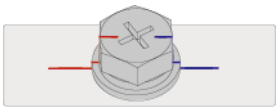

- If the equipment has multiple inputs, disconnect all the inputs and wait until the equipment is completely powered off before performing operations on the equipment.
- Before maintaining a downstream electrical or power distribution device, turn off the output switch on the power supply equipment.
- During equipment maintenance, attach "No switching on" labels near the upstream and downstream switches or circuit breakers as well as warning signs to prevent accidental connection. The equipment can be powered on only after troubleshooting is complete.
- Do not open equipment panels.
- Check equipment connections periodically, ensuring that all screws are securely tightened.
- Only qualified professionals can replace a damaged cable.
- Do not scrawl, damage, or block any labels or nameplates on the equipment. Promptly replace labels that have worn out.
- Do not use solvents such as water, alcohol, or oil to clean electrical components inside or outside of the equipment.

Grounding

- Ensure that the grounding impedance of the equipment complies with local electrical standards.
- Ensure that the equipment is connected permanently to the protective ground. Before operating the equipment, check its electrical connection to ensure that it is reliably grounded.
- Do not operate the equipment in the absence of a properly installed ground conductor.
- Do not damage the ground conductor.

Cabling Requirements

- When selecting, installing, and routing cables, follow local safety regulations and rules.
- When routing power cables, ensure that there is no coiling or twisting. Do not join or weld power cables. If necessary, use a longer cable.
- Ensure that all cables are properly connected and insulated, and meet specifications.
- Ensure that the cables are protected from mechanical stress, overheating, and corrosion.
- Ensure that cables are not squeezed, torn, warped, or whitened.
- Ensure that the slots and holes for routing cables are free from sharp edges, and that the positions where cables are routed through pipes or cable holes are equipped with cushion materials to prevent the cables from being damaged by sharp edges or burrs.

- Ensure that cables of the same type are bound together neatly and straight and that the cable sheath is intact. When routing cables of different types, ensure that they are away from each other without entanglement and overlapping.
- Secure buried cables using cable supports and cable clips. Ensure that the cables in the backfill area are in close contact with the ground to prevent cable deformation or damage during backfilling.
- If the external conditions (such as the cable layout or ambient temperature) change, verify the cable usage in accordance with the IEC-60364-5-52 or local laws and regulations. For example, check that the current-carrying capacity meets requirements.
- When routing cables, reserve at least 30 mm clearance between the cables and heat-generating components or areas. This prevents deterioration or damage to the cable insulation layer.

1.3 Environment Requirements

DANGER

Do not expose the equipment to flammable or explosive gas or smoke. Do not perform any operation on the equipment in such environments.

DANGER

Do not store any flammable or explosive materials in the equipment area.

DANGER

Do not place the equipment near heat sources or fire sources, such as smoke, candles, heaters, or other heating devices. Overheating may damage the equipment or cause a fire.

WARNING

Install the equipment in an area far away from liquids. Do not install it under areas prone to condensation, such as under water pipes and air exhaust vents, or areas prone to water leakage, such as air conditioner vents, ventilation vents, or feeder windows of the equipment room. Ensure that no liquid enters the equipment to prevent faults or short circuits.

 Copyright © Huawei Digital Power Technologies Co., Ltd.

WARNING

To prevent damage or fire due to high temperature, ensure that the ventilation vents or heat dissipation systems are not obstructed or covered by other objects while the equipment is running.

General Requirements

- Store the equipment according to the storage requirements. Equipment damage caused by unqualified storage conditions is not covered under the warranty.
- Keep the installation and operating environments of the equipment within the allowed ranges. Otherwise, its performance and safety will be compromised.
- The operating temperature range provided in the equipment's technical specifications refers to the ambient temperatures in equipment's installation environment.
- Do not install, use, or operate outdoor equipment and cables (including but not limited to moving equipment, operating equipment and cables, inserting connectors to or removing connectors from signal ports connected to outdoor facilities, working at heights, performing outdoor installation, and opening doors) in harsh weather conditions such as lightning, rain, snow, and level 6 or stronger wind.
- Do not install the equipment in an environment with dust, smoke, volatile or corrosive gases, infrared and other radiations, organic solvents, or salty air.
- Do not install the equipment in an environment with conductive metal or magnetic dust.
- Do not install the equipment in an area conducive to the growth of microorganisms such as fungus or mildew.
- Do not install the equipment in an area with strong vibration, noise, or electromagnetic interference.
- Ensure that the site complies with local laws, regulations, and related standards.
- Ensure that the ground in the installation environment is solid, free from spongy or soft soil, and not prone to subsidence. The site must not be located in a low-lying land prone to water or snow accumulation, and the horizontal level of the site must be above the highest water level of that area in history.
- Do not install the equipment in a position that may be submerged in water.
- If the equipment is installed in a place with abundant vegetation, in addition to routine weeding, harden the ground underneath the equipment using cement or gravel (the area shall be greater than or equal to 3 m x 2.5 m).
- Do not install the equipment outdoors in salt-affected areas because it may be corroded. A salt-affected area refers to the region within 500 m of the coast or prone to sea breeze. Regions prone to sea breeze vary with weather conditions (such as typhoons and monsoons) or terrains (such as dams and hills).
- Before installation, operation, and maintenance, clean up any water, ice, snow, or other foreign objects on the top of the equipment.

 Copyright © Huawei Digital Power Technologies Co., Ltd.

- When installing the equipment, ensure that the installation surface is solid enough to bear the weight of the equipment.
- After installing the equipment, remove the packing materials such as cartons, foam, plastics, and cable ties from the equipment area.

1.4 Mechanical Safety

WARNING

Ensure that all necessary tools are ready and inspected by a professional organization. Do not use tools that have signs of scratches or fail to pass the inspection or whose inspection validity period has expired. Ensure that the tools are secure and not overloaded.

WARNING

Do not drill holes into the equipment. Doing so may affect the sealing performance and electromagnetic containment of the equipment and damage components or cables inside. Metal shavings from drilling may short-circuit boards inside the equipment.

General Requirements

- Repaint any paint scratches caused during equipment transportation or installation in a timely manner. Equipment with scratches must not be exposed for an extended period of time.
- Do not perform operations such as arc welding and cutting on the equipment without evaluation by the Company.
- Do not install other devices on the top of the equipment without evaluation by the Company.
- When performing operations over the top of the equipment, take measures to protect the equipment against damage.
- Use correct tools and operate them in the correct way.

Moving Heavy Objects

- Be cautious to prevent injury when moving heavy objects.

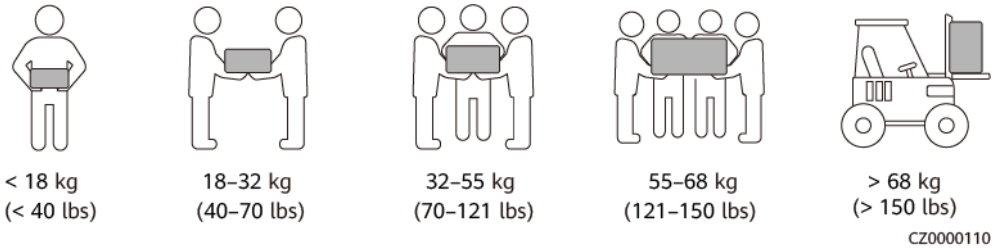

- If multiple persons need to move a heavy object together, determine the manpower and work division with consideration of height and other conditions to ensure that the weight is equally distributed.

- If two persons or more move a heavy object together, ensure that the object is lifted and landed simultaneously and moved at a uniform pace under the supervision of one person.
- Wear personal protective gears such as protective gloves and shoes when manually moving the equipment.
- To move an object by hand, approach to the object, squat down, and then lift the object gently and stably by the force of the legs instead of your back. Do not lift it suddenly or turn your body around.
- Do not quickly lift a heavy object above your waist. Place the object on a workbench that is half-waist high or any other appropriate place, adjust the positions of your palms, and then lift it.
- Move a heavy object stably with balanced force at an even and low speed. Put down the object stably and slowly to prevent any collision or drop from scratching the surface of the equipment or damaging the components and cables.
- When moving a heavy object, be aware of the workbench, slope, staircase, and slippery places. When moving a heavy object through a door, ensure that the door is wide enough to move the object and avoid bumping or injury.
- When transferring a heavy object, move your feet instead of turning your waist around. When lifting and transferring a heavy object, ensure that your feet point to the target direction of movement.
- When transporting the equipment using a pallet truck or forklift, ensure that the tynes are properly positioned so that the equipment does not topple. Before moving the equipment, secure it to the pallet truck or forklift using ropes. When moving the equipment, assign dedicated personnel to take care of it.
- Choose sea, roads in good conditions, or airplanes for transportation. Do not transport the equipment by railway. Avoid tilt or jolt during transportation.

Using Ladders

- Use wooden or insulated ladders when you need to perform live-line working at heights.
- Platform ladders with protective rails are preferred. Single ladders are not recommended.
- Before using a ladder, check that it is intact and confirm its load bearing capacity. Do not overload it.
- Ensure that the ladder is securely positioned and held firm.

CZ00000107

- When climbing up the ladder, keep your body stable and your center of gravity between the side rails, and do not overreach to the sides.
- When a step ladder is used, ensure that the pull ropes are secured.
- If a single ladder is used, the recommended angle for the ladder against the floor is 75 degrees, as shown in the following figure. A square can be used to measure the angle.

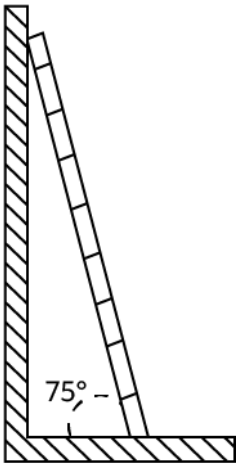

PI02SC0008

- If a single ladder is used, ensure that the wider end of the ladder is at the bottom, and take protective measures to prevent the ladder from sliding.
- If a single ladder is used, do not climb higher than the fourth rung of the ladder from the top.
- If you use a single ladder to climb up to a platform, ensure that the ladder is at least 1 m higher than the platform.

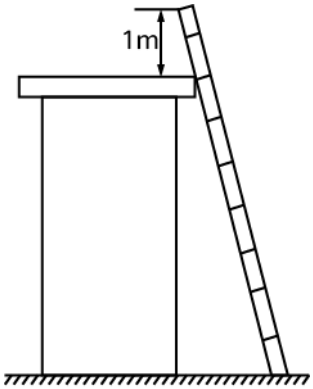

PI02SC0009

Hoisting

- Only trained and qualified personnel are allowed to perform hoisting operations.
- Install temporary warning signs or fences to isolate the hoisting area.
- Ensure that the foundation where hoisting is performed meets the load-bearing requirements.
- Before hoisting objects, ensure that hoisting tools are firmly secured onto a fixed object or wall that meets the load-bearing requirements.

- During hoisting, do not stand or walk under the crane or the hoisted objects.
- Do not drag steel ropes and hoisting tools or bump the hoisted objects against hard objects during hoisting.
- Ensure that the angle between two hoisting ropes is no more than 90 degrees, as shown in the following figure.

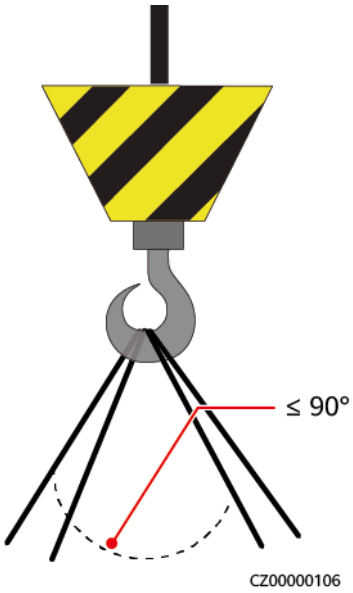

Drilling Holes

- Obtain consent from the customer and contractor before drilling holes.
- Wear protective equipment such as safety goggles and protective gloves when drilling holes.
- To avoid short circuits or other risks, do not drill holes into buried pipes or cables.
- When drilling holes, protect the equipment from shavings. After drilling, clean up any shavings.

2 Product Description

Functions

- The Smart Guard can implement on/off-grid switching and load management. Its main function is to switch the inverter between on-grid and off-grid modes. When the grid is available, the inverter works in on-grid mode, and the grid and inverter ensure power supply to both backup loads and non-backup loads. When the grid fails, the inverter quickly switches to off-grid mode and supplies power to only backup loads. If the power plant is equipped with a generator, when the SOC of the energy storage system (ESS) is lower than **ESS SOC Threshold for Starting Up Generator**, the generator starts and supplies power to backup loads and non-backup loads. At the same time, the surplus power generated by the generator can be used to charge the ESS. When the SOC of the ESS reaches **ESS SOC Threshold for Shutting Down Generator**, the generator shuts down and the ESS supplies power to only backup loads. After the grid recovers, the inverter automatically switches to grid-tied mode.
- The seamless switching function of the Smart Guard needs to be enabled in **Quick settings** on the app. If the function is enabled, the system where an MAP0 inverter is installed will switch to off-grid mode within 20 ms after the grid fails or becomes abnormal, ensuring uninterruptible power supply to IT equipment such as computers connected to the backup load port.
- The Smart Guard contains the SmartAssistant, which can connect to PV systems, ESSs, smart chargers, and smart loads. In addition to unified scheduling of home energy, the SmartAssistant can connect to smart appliances such as Huawei chargers, SG Ready heat pumps, smart switches, and other smart loads. Users can set the reservation time to charge vehicles and heat water in advance at the specified time. In addition, users can set the priority to use PV power for devices as required to make the best use of PV power.

2.1 Model Number Description

This document involves the following product models:

- SmartGuard-63A-T0
- SmartGuard-63A-AUT0

 Copyright © Huawei Digital Power Technologies Co., Ltd.

Figure 2-1 Model number

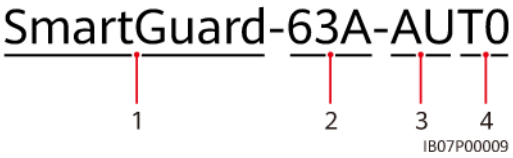

Table 2-1 Model number description

No.	Item	Description
1	Product family name	Smart Guard: Whole Home Backup
2	Maximum current	63A: The total load current is less than or equal to 63 A. The maximum current of the grid port is 63 A.
3	Region	AU: Australia/New Zealand/South Africa
4	Product code	T0: Three-phase Whole Home Backup system

2.2 Networking

Classification of Loads Connected to the Smart Guard

CAUTION

- If the power of backup loads exceeds the maximum off-grid power of the system, the inverter may be shut down due to overload. In this case, you need to shut down some loads. Alternatively, connect loads with lower priority to the non-backup load port.
- If the generator deployed in the power plant runs in off-grid mode and the load power exceeds the generator capacity, the generator may shut down due to overload. You are advised to shut down some loads.
- If the main circuit breaker's rating is 63 A or less, you can connect all or some of the loads to the Smart Guard. However, if the rating is greater than 63 A, you can connect only some of the loads to the Smart Guard.
- TN-C system: No residual current device (RCD) is required.

Step 1 Residential load classification (dashed boxes indicate optional components)

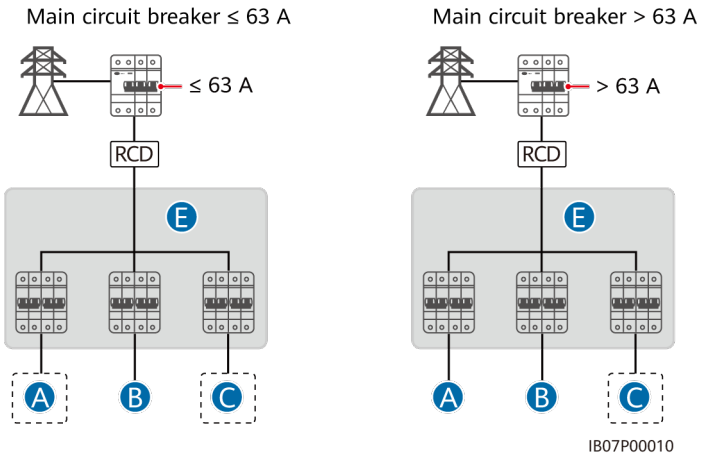

Main Circuit Breaker	Connect All Loads to the Smart Guard	Connect Some of Loads to the Smart Guard
≤ 63 A	Supported	Supported
> 63 A	Not supported	Supported

Step 2 Classification of loads connected to the Smart Guard (dashed boxes indicate optional components)

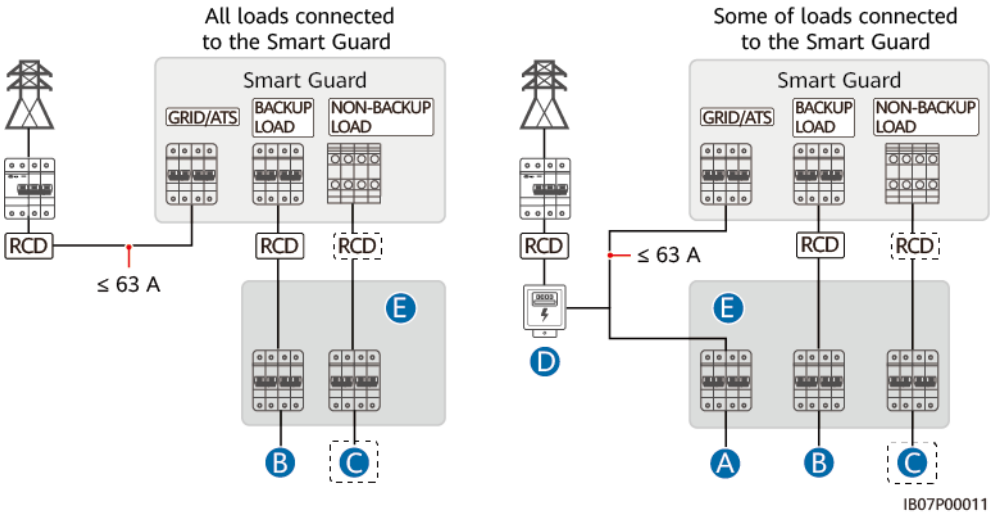

(A) Load not connected to the Smart Guard (B) Backup load (C) Non-backup load

(D) Power meter (E) AC power distribution box

----End

Residential Wiring Diagrams

NOTE

- TN-S/TN-C-S/TT system: Ensure that the neutral wires of the backup load, power grid, non-backup load, and inverter are not connected outside the Smart Guard.
- The PEN cable with ⚠ must be connected to the PE bar of the AC power distribution box.
- TN-C system: No residual current device (RCD) is required.

1. Residential wiring diagram for the TN-S/TN-C-S/TT system

Figure 2-2 SmartGuard-63A-T0 residential wiring diagram (dashed lines indicate optional cable connections)

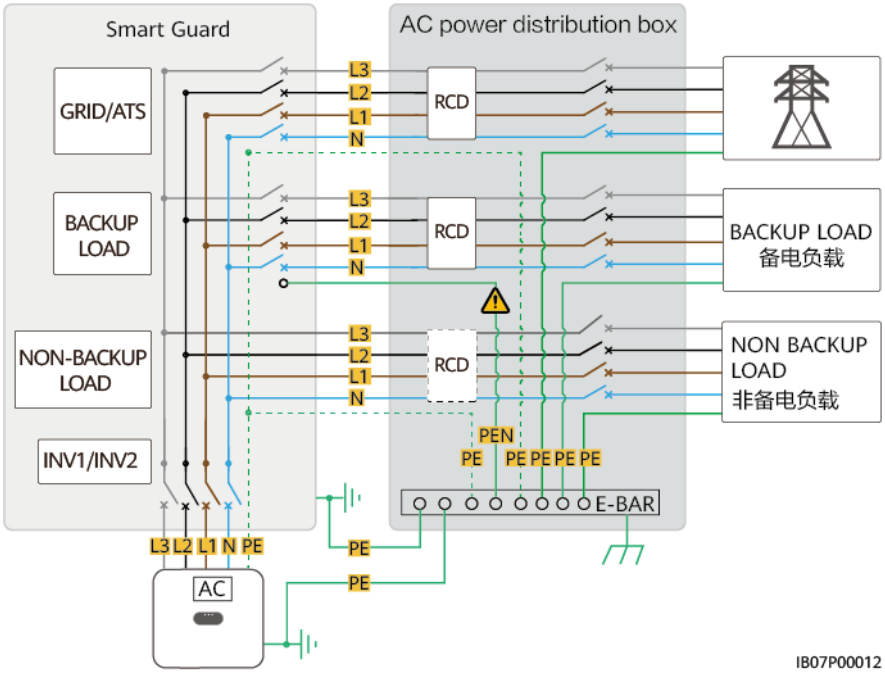

Figure 2-3 SmartGuard-63A-AUT0 residential wiring diagram (dashed lines indicate optional cable connections)

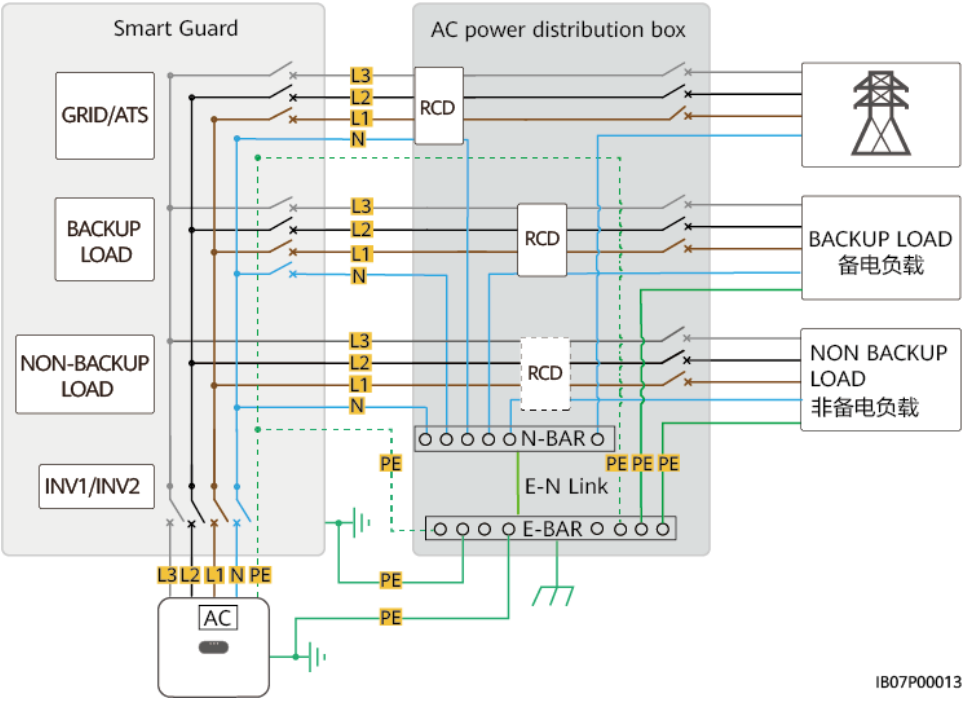

2. Residential wiring diagram for the TN-C system

Figure 2-4 Residential wiring diagram for the TN-C system (dashed lines indicate optional cable connections)

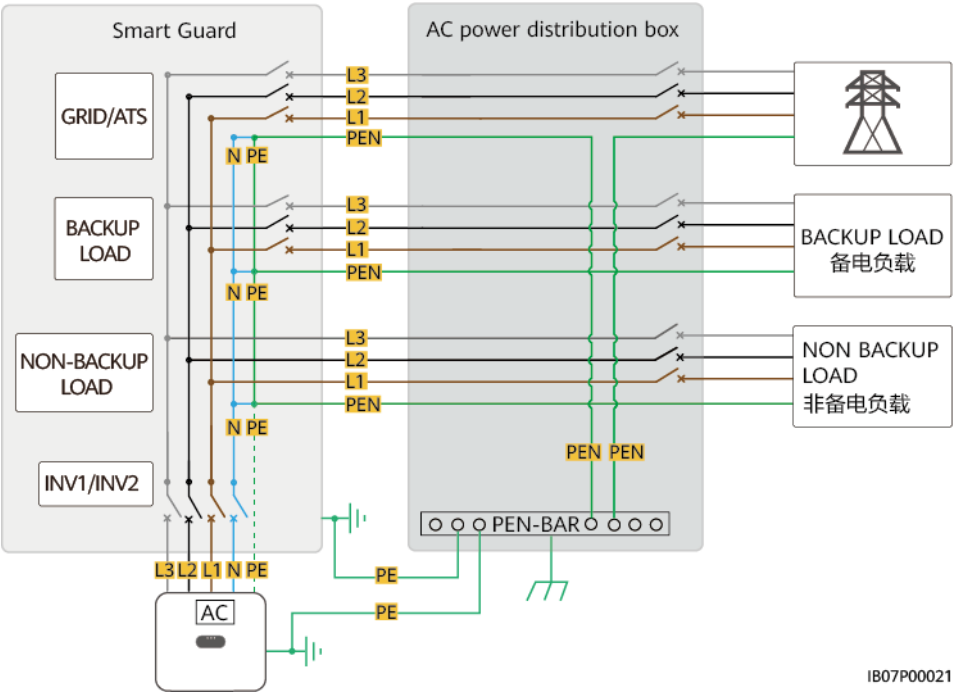

Networking

The Smart Guard is used in a residential rooftop on/off-grid system. The system consists of the PV strings, ESS, inverter, Smart Guard, grid, generator, and loads.

Figure 2-5 Networking with all loads connected to the Smart Guard (dashed boxes indicate optional components)

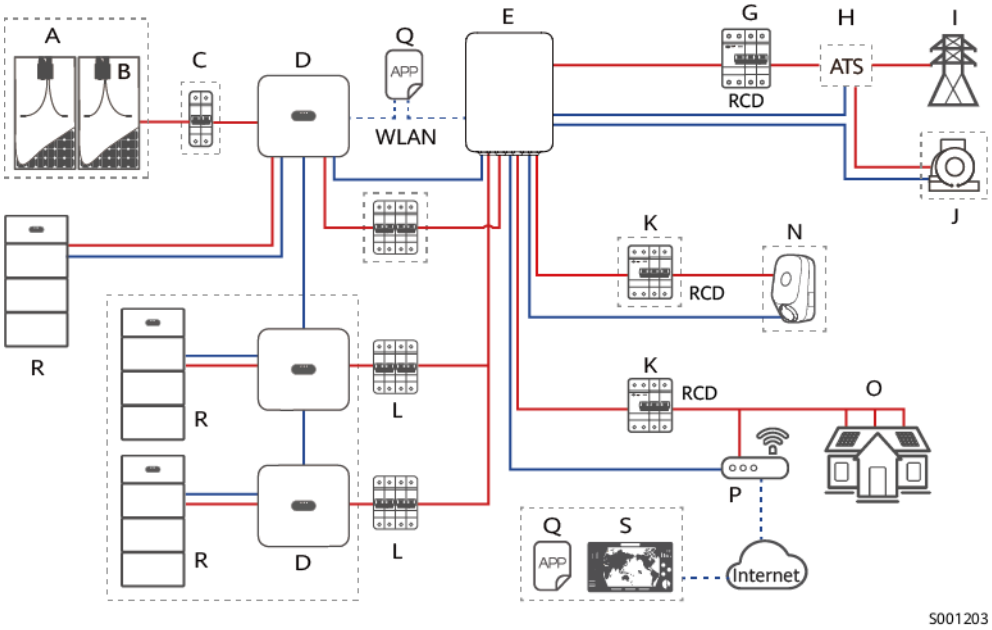

Figure 2-6 Networking with some of loads connected to the Smart Guard (dashed boxes indicate optional components)

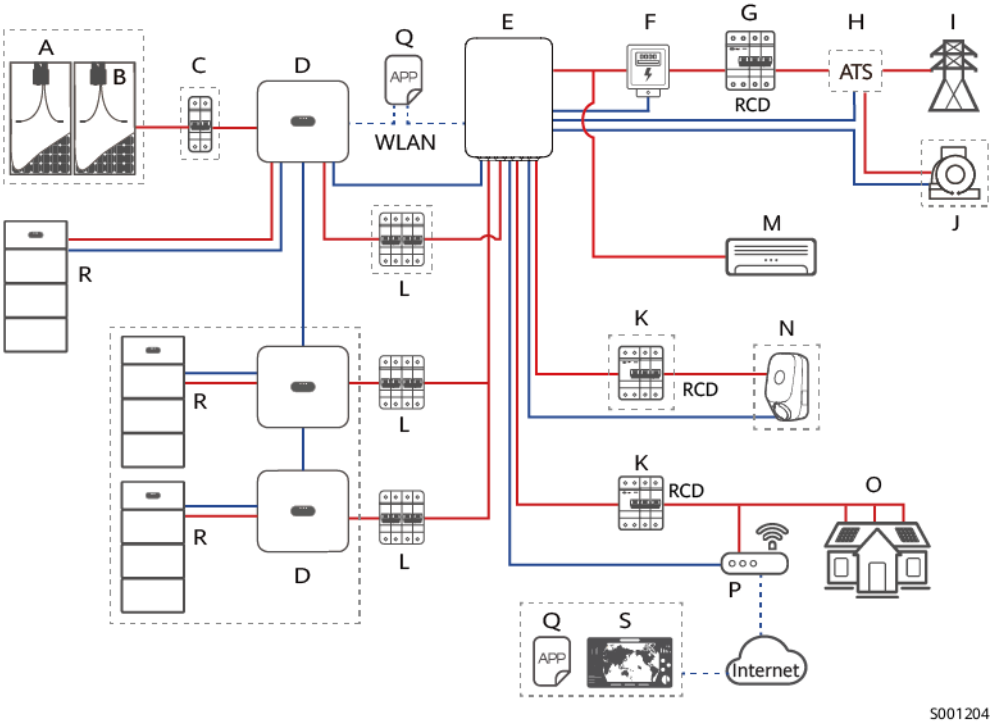

(A) PV string	(B) Smart PV Optimizer	(C) DC switch
(D) Inverter	(E) Smart Guard	(F) Power meter
(G) Main circuit breaker	(H) ATS	(I) Power grid

(J) Generator	(K) Residual current device (RCD)	(L) AC switch of the inverter
(M) Load not connected to the Smart Guard	(N) Non-backup load	(O) Backup load
(P) Router	(Q) App	(R) Battery
(S) Management system		

DANGER

- TN-S/TN-C-S/TT system: An RCD must be installed before the backup load. During off-grid operation, the main circuit breaker does not provide protection. Electric leakage on the loads may result in electric shocks. The rated voltage of the RCD must be at least 415 V AC. Its rated residual operating current must be ≥ Number of M1 or MAP0 inverters x 100 mA or ≥ Number of MB0 inverters x 300 mA.
- TN-S/TN-C-S/TT system: A main circuit breaker with the leakage protection function must be installed. Its rated voltage must be at least 415 V AC. Its rated residual operating current must be ≥ Number of M1 or MAP0 inverters x 100 mA or ≥ Number of MB0 inverters x 300 mA.
- TN-C system: No residual current device (RCD) is required.
- A maximum of three MAP0 inverters can be connected in parallel. If two MAP0 inverters need to connect to the same port, connect them in parallel first.

NOTE

- — indicates a power cable, — indicates a signal cable, and - - - indicates wireless communication.
- Only the MAP0 inverter can be connected to a generator.
- The seamless switching function of the Smart Guard needs to be manually enabled. If the function is enabled, the system where an MAP0 inverter is installed will switch to off-grid mode within 20 ms after the grid fails or becomes abnormal, ensuring uninterruptible power supply to IT equipment such as computers connected to the backup load port.
- If the system is configured with a high-power load such as a charger, heat pump, or heating rod, connect the high-power load to the non-backup load port of the Smart Guard or outside the Smart Guard.
- The Smart Guard can be connected to smart switches and other smart loads. Other smart loads include third-party chargers, EEBUS heat pumps, and heating rods, which need to be connected to the router of the SmartAssistant over FE or WLAN. For details about how to connect smart switches and other smart loads, see **Residential Smart PV Solution User Manual (SmartAssistant Networking and Smart Guard Networking)**.

System Power in Off-Grid Mode

1. The maximum power of the system in off-grid mode depends on the ESS capacity and the inverter off-grid power. The following describes the maximum power of the system in off-grid mode using an inverter with the off-grid power of 8 kW and an ESS with the capacity of 21 kWh as an example.

NOTICE

- Power supply priority in off-grid mode: PV power generation > ESS discharge > generator power generation
- For details about the ESS capacity configuration, see **LUNA2000-(5-30)-S0 User Manual** and **LUNA2000-S1 User Manual**.

Figure 2-7 Illustration of maximum power in off-grid mode

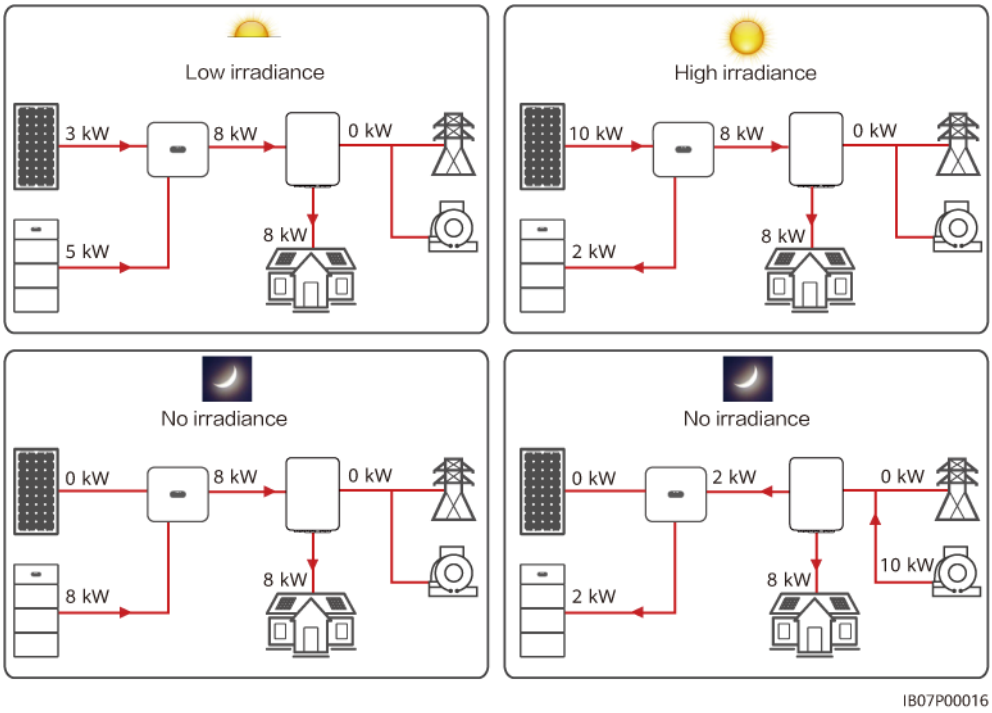

2. Off-grid power of inverters

Table 2-2 SUN2000-(3KTL-12KTL)-M1

Parameter	SUN2000-3KTL-M1	SUN2000-5KTL-M1	SUN2000-6KTL-M1	SUN2000-8KTL-M1	SUN2000-10KTL-M1	SUN2000-12KTL-M1
Off-grid power	3000 W	3300 W	3300 W	3300 W	3300 W	3300 W

Table 2-3 SUN2000-(12K-25K)-MB0

Parameter	SUN2000-12K-MB0	SUN2000-15K-MB0	SUN2000-17K-MB0	SUN2000-20K-MB0	SUN2000-25K-MB0
Off-grid power	8300 W	8300 W	8300 W	8300 W	8300 W

 Copyright © Huawei Digital Power Technologies Co., Ltd.

Table 2-4 SUN5000-(17K, 25K)-MB0

Parameter	SUN5000-17K-MB0	SUN5000-25K-MB0
Off-grid power	8300 W	8300 W

Table 2-5 SUN2000-(5K-12K)-MAP0

Parameter	SUN2000-5K-MAP0	SUN2000-6K-MAP0	SUN2000-8K-MAP0	SUN2000-10K-MAP0	SUN2000-12K-MAP0
Off-grid power	5000 W	6000 W	8000 W	10,000 W	12,000 W

Table 2-6 SUN5000-(8K, 12K)-MAP0

Parameter	SUN5000-8K-MAP0	SUN5000-12K-MAP0
Off-grid power	8000 W	12,000 W

Residential Load Features

1. When the inverter is off-grid, the peak load current and duration shall not exceed the off-grid running capability of the inverter. The stable running of the system is affected by both the continuous load power and the inrush current during load startup.
2. To ensure that loads can start and run properly, do not power on or start the following typical devices at the same time, or reduce the number of typical devices connected.

Table 2-7 Residential load features

Load Feature	Load	Cause
High startup current (motor)	Air conditioners, electric saws, and pumps	Load startup requires a high startup current, which may exceed the maximum output current of the inverter. Although the load power is within the off-grid operating power range of the system, the loads may fail to start.

Load Feature	Load	Cause
Dynamic power	Washing machines, soy milk makers, rice cookers, and electric ovens	When the system is running properly, the power of adjacent running loads is fluctuating.
High harmonic current	Induction cookers and hair dryers	The non-sinusoidal current may cause total harmonic distortion of output voltage (THDv).
High surge current	Laptop charger, water purifier, projector, etc.	When a device containing a switch-mode power supply is connected to the power source, the energy storage component of the device will receive a high power-on surge current.

Supported Earthing Systems

The Smart Guard supports TN-S, TN-C-S, TT, and TN-C systems. In the TT power grid, the N-to-PE voltage must be less than 30 V.

Figure 2-8 Earthing systems

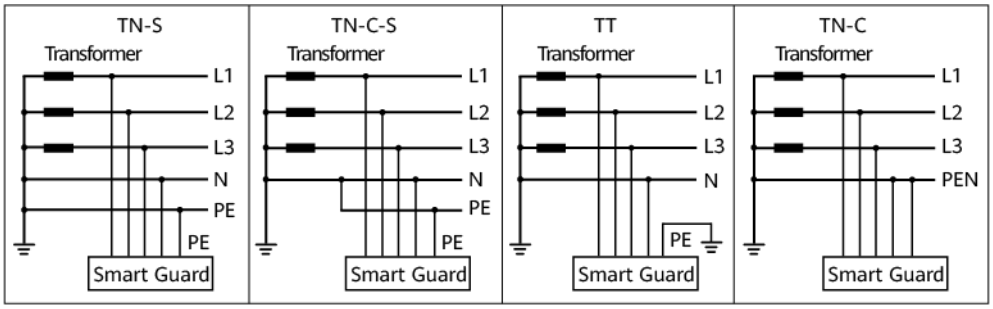

2.3 Appearance

Appearance and Ports

Figure 2-9 Appearance and ports

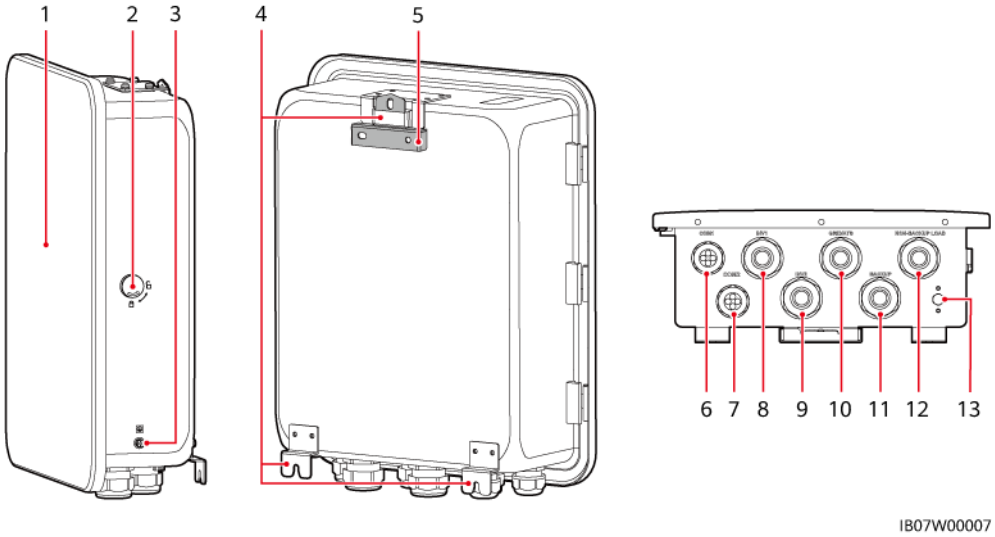

(1) Maintenance compartment door[a]

(2) Lock

(3) Ground screw

(4) Mounting kits

(5) Mounting bracket

(6) Communications port (COM1)

(7) Communications port (COM2)

(8) Inverter AC input port (INV1 63A)

(9) Inverter AC input port (INV2 32A)

(10) Grid AC output port (GRID/ATS)

(11) Backup load port (BACKUP LOAD)

(12) Non-backup load port (NON-BACKUP LOAD)

(13) Ventilation valve

NOTE

Note a: Before opening the maintenance compartment door, turn off the main circuit breaker, shut down the inverter, and turn off the DC switches of the inverter and battery.

 Copyright © Huawei Digital Power Technologies Co., Ltd.

Maintenance Compartment and Wiring Terminals

Figure 2-10 Maintenance compartment and wiring terminals

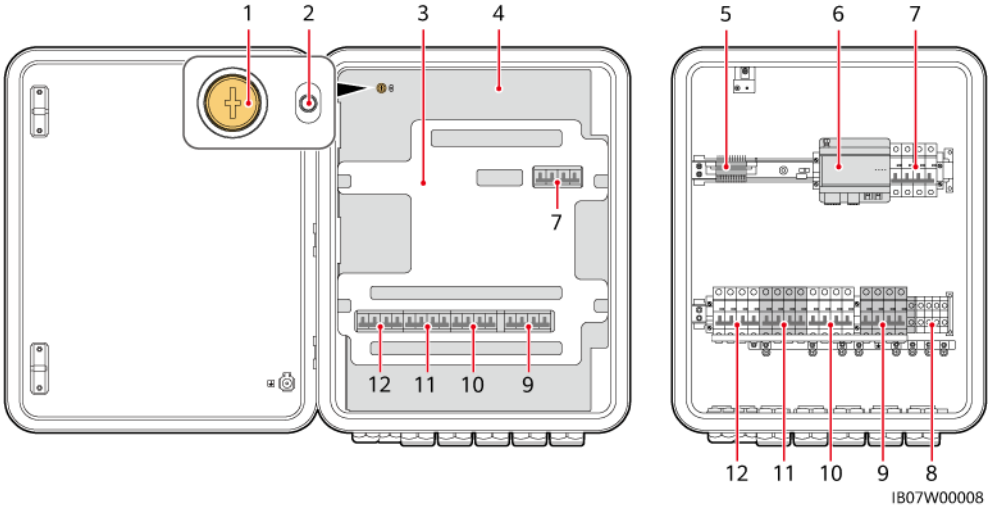

(1) Screw on the maintenance compartment cover	(2) LED indicator
(3) Cushioning material[c]	(4) Maintenance compartment cover[a]
(5) Signal cable terminal of the Smart Guard	(6) SmartAssistant
(7) Bypass switch[b]	(8) Non-backup load terminal (NON-BACKUP LOAD)
(9) Backup load terminal (BACKUP LOAD)	(10) Grid AC output terminal (GRID/ATS)
(11) Inverter AC input terminal 2 (INV2)	(12) Inverter AC input terminal 1 (INV1)

WARNING

Note a: Only authorized personnel can open the maintenance compartment cover to perform electrical connections.

Note b: During normal use, do not operate the bypass switch and ensure that it is off.

NOTE

Note c: Dispose of the removed cushioning material according to waste sorting regulations.

2.4 Working Principles

Figure 2-11 Electrical diagram of the Smart Guard

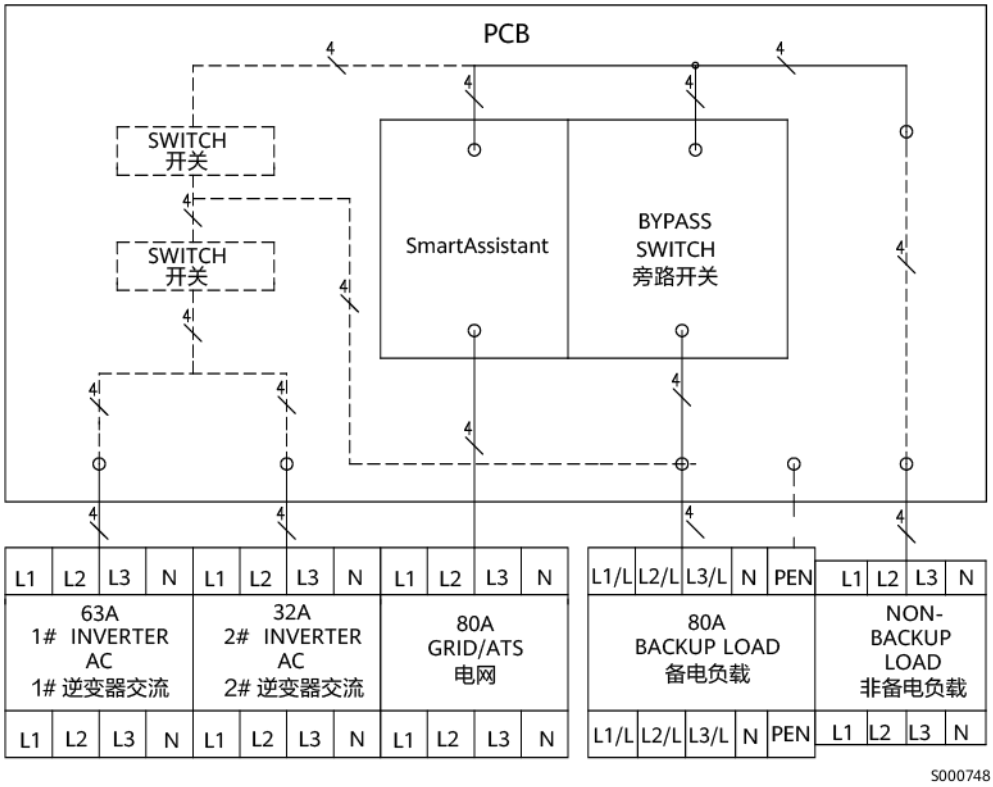

2.5 Working Modes

- The Smart Guard can work in three modes: on-grid, off-grid, and generator off-grid.
- Power supply priority: on-grid > off-grid > generator off-grid

Figure 2-12 Working modes

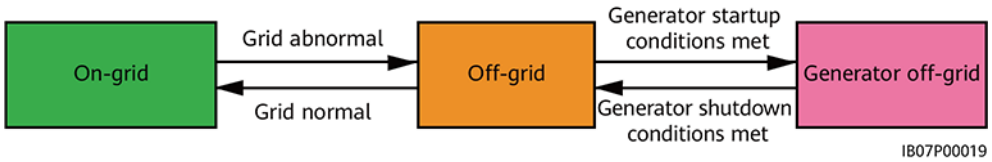

 Copyright © Huawei Digital Power Technologies Co., Ltd.

Table 2-8 Working mode switching

Switching Mode	Description
Automatic switching	• The Smart Guard automatically switches the working mode based on actual conditions and working conditions. • Seamless switching from on-grid mode to off-grid mode can be enabled or disabled.
Forced switching	• If you tap **Switch** when the system is in on-grid mode, the system forcibly switches to the off-grid mode. If the system is faulty or manually switched back to the on-grid mode, the system automatically exits the forced switching mode. • If you tap **Switch** when the system is in off-grid mode, the system attempts to switch to the on-grid mode and automatically exits the forced switching mode.

2.6 Label Description

Enclosure Labels

Table 2-9 Enclosure label description

Label	Name	Description
	Electric shock warning	Only authorized personnel can open the maintenance compartment cover.
	Refer to documentation	Reminds operators to read the user manual of the Smart Guard.

Label	Name	Description
	Operation warning	• During normal use, do not operate the bypass switch and ensure that it is off. • If the Smart Guard is abnormal and cannot work, consult the customer service personnel and refer to **7.4 Operations on the Bypass Switch of the Smart Guard**. Improper operations may cause electric shocks.
	Electric shock warning	Cut off power supply and remove metal objects such as watches and rings before maintenance.
	Delayed discharge	• High voltage exists after the Smart Guard is powered on. Only qualified and trained electrical technicians are allowed to install and operate the Smart Guard. • Residual voltage exists after the Smart Guard is powered off. It takes 5 minutes for the Smart Guard to discharge to the safe voltage.
	Burn warning	Do not touch the Smart Guard, as the enclosure is hot when the Smart Guard is running.
	Grounding warning	Ground the Smart Guard before powering it on.
	ESD label	Do not touch the boards in the Smart Guard.

 Copyright © Huawei Digital Power Technologies Co., Ltd.

Label	Name	Description
	QR code for WLAN connection	Scan the QR code to connect to the WLAN of the Smart Guard.
	Grounding	Indicates the position for connecting the PE cable.

NOTE

The labels are for reference only.

3 Storage Requirements

If the Smart Guard is not put into use immediately, the following requirements must be met when the Smart Guard is stored:

- Do not unpack the Smart Guard.
- Keep the storage temperature at –40°C to +70°C and the humidity at 5%–95% RH.
- Store the Smart Guard in a clean and dry place and protect it from dust and moisture.
- The Smart Guard can be stacked in a maximum of six layers. To avoid personal injury or device damage, stack the Smart Guard with caution to prevent them from falling over.
- During the storage period, check the Smart Guard periodically (recommended: once every three months). Replace the packing materials that are damaged by insects or rodents in a timely manner.
- If the Smart Guard has been stored for two years or longer, it must be checked and tested by professionals before use.

 Copyright © Huawei Digital Power Technologies Co., Ltd.

4 System Installation

4.1 Installation Modes

The Smart Guard can be wall-mounted.

Table 4-1 Installation modes

Installation Mode	Screw Specifications	Description
Wall mounting	M6x60 stainless steel expansion bolt	Delivered with the product

4.2 Installation Position

4.2.1 Site Selection Requirements

Basic Requirements

- The Smart Guard is protected to IP55 and can be installed indoors or outdoors.
- Do not install the Smart Guard in a position where it is easy to touch because the enclosure temperature is high when the Smart Guard is running.
- Do not install the Smart Guard near flammable or explosive materials.
- Keep the Smart Guard out of reach of children.
- The Smart Guard will be corroded in salt-affected areas, and the salt corrosion may cause fire. Do not install the Smart Guard outdoors in salt-affected areas. A salt-affected area refers to the region within 500 m of the coast or prone to sea breeze. Regions prone to sea breeze vary with weather conditions (such as typhoons and monsoons) or terrains (such as dams and hills).
- Install the Smart Guard in a well-ventilated environment to ensure good heat dissipation.

 Copyright © Huawei Digital Power Technologies Co., Ltd.

- You are advised to install the Smart Guard in a sheltered area or install an awning over it.
- Do not install the Smart Guard in a place with direct sunlight exposure. Otherwise, the capacity may decrease or overtemperature protection may be triggered.
- It is recommended that the Smart Guard be installed beside the AC power distribution box and be far away from the rest area. When the Smart Guard performs on/off-grid switchover, a click sound is generated.

Mounting Structure Requirements

- Ensure that the structure where the Smart Guard is installed is fireproof.
- Do not install the Smart Guard on flammable building materials.
- Verify that the surface on which the Smart Guard is installed is strong enough to bear the weight of the Smart Guard.
- In residential areas, do not install the Smart Guard on a drywall or wall made of similar materials which have a weak sound insulation performance to avoid disturbing residents.

4.2.2 Clearance Requirements

Installation Clearance Requirements

- Dimensions of mounting holes for the Smart Guard

Figure 4-1 Mounting bracket dimensions

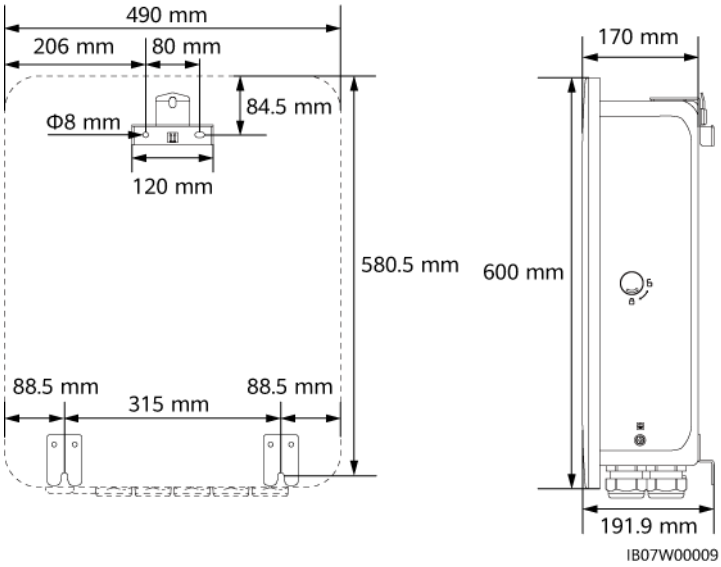

- Reserve sufficient clearances around the device for installation, door opening and closing, and heat dissipation.

Figure 4-2 Clearances

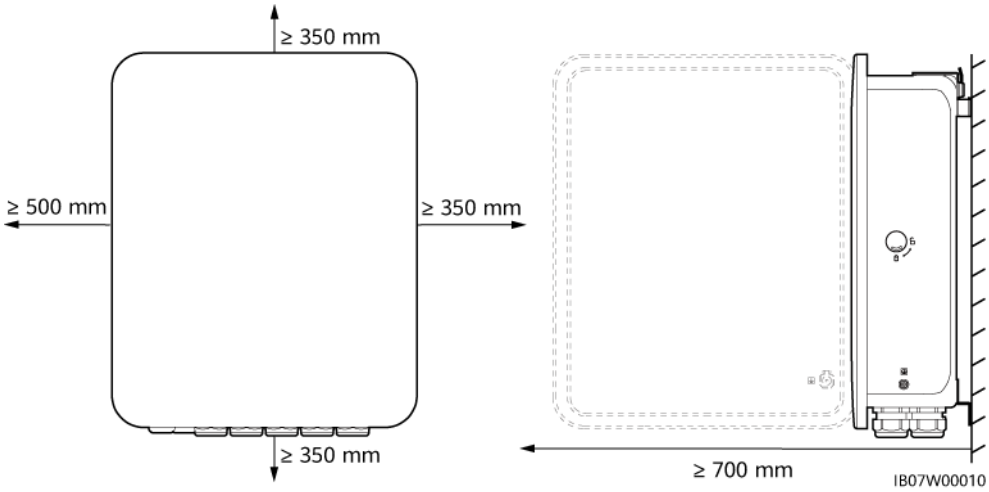

4.2.3 Angle Requirements

The installation angle requirements are as follows:

- Install the Smart Guard vertically or at a maximum back tilt of 15 degrees to facilitate heat dissipation.
- Do not install the Smart Guard at forward tilted, excessive backward tilted, side tilted, horizontal, or upside down positions.

Figure 4-3 Installation angle

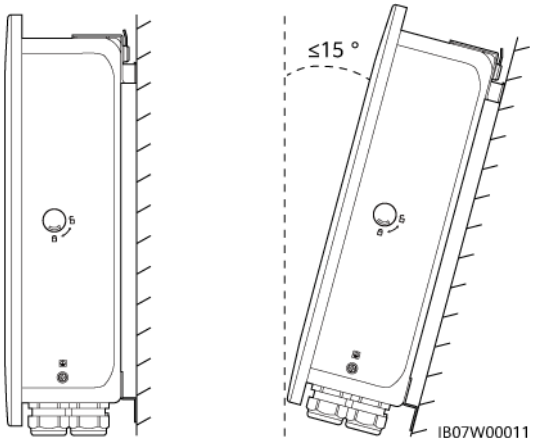

4.3 Preparing Tools

Table 4-2 Personal protective equipment (PPE)

Safety helmet	Goggles	Reflective vest	Insulated shoes
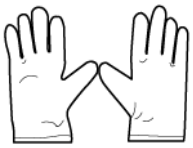 Electrostatic discharge (ESD) gloves	Insulated gloves	Protective gloves	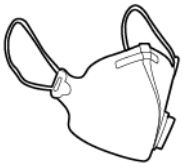 Dust mask

Table 4-3 Installation tools

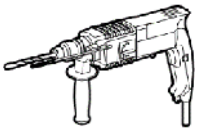 Hammer drill Drill bit: Φ8 mm, Φ6 mm	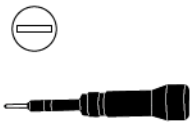 Flat-head insulated torque screwdriver	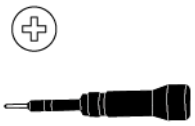 Phillips insulated torque screwdriver	Insulated torque socket wrench
Cable cutter	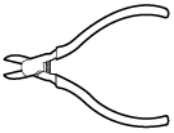 Diagonal pliers	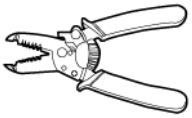 Wire stripper	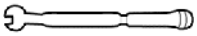 Torque wrench

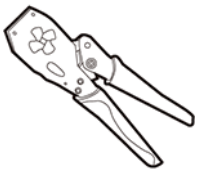 Power cable crimping tool	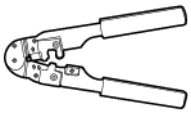 RJ45 crimping tool	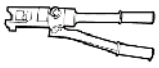 Hydraulic pliers	Eject pin
Utility knife	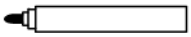 Marker	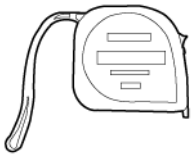 Steel measuring tape	Cable tie
Multimeter	Level	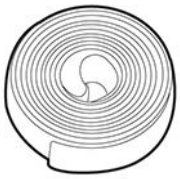 Heat shrink tubing	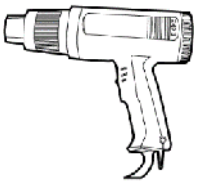 Heat gun
Rubber mallet	Vacuum cleaner	-	-

4.4 Pre-installation Check

Checking Outer Packaging

Before unpacking the product, check the outer packaging for damage, such as holes and cracks, and check the product model. If any damage is found or the model is not what you requested, do not unpack the product and contact your vendor as soon as possible.

NOTICE

You are advised to remove the packing materials within 24 hours before installing the product.

Checking Deliverables

After unpacking the Smart Guard, check that the deliverables are intact and complete, and free from any obvious damage. If any item is missing or damaged, contact your vendor.

NOTE

For details about the number of deliverables, see the *Packing List* in the packing case.

4.5 Moving the Smart Guard

Put your hands on both sides of the Smart Guard, take the Smart Guard out of the packing case, and move it to the installation position.

CAUTION

- Move the Smart Guard with care to prevent device damage and personal injury.
- Do not use the wiring terminals and ports at the bottom to support any weight of the Smart Guard.
- When you need to temporally place the Smart Guard on the ground, use foam, cardboard, or other protection material to prevent damage to its enclosure.

4.6 Wall Mounting

Procedure

Step 1 Determine the positions for drilling holes using the marking-off plate, level the holes using a level, and mark the positions using a marker.

Step 2 Secure the mounting bracket.

DANGER

Avoid drilling holes into the water pipes or power cables buried in the wall.

NOTE

- M6x60 expansion bolts are delivered with the product. If the length and number of the bolts do not meet installation requirements, prepare M6 stainless steel expansion bolts by yourself.
- The expansion bolts delivered with the product are used for solid brick-concrete walls. If other types of walls are used, ensure that the load-bearing capacity requirements are met and appropriate bolts are selected.
- To prevent installation failure of expansion bolts due to excessive deviation of holes on brick-concrete walls, you are advised to use small drill bits or other installation parts such as plastic anchor bolts to ensure reliable installation. The service life of the installation parts shall be at least 10 years.

Figure 4-4 Expansion bolt composition

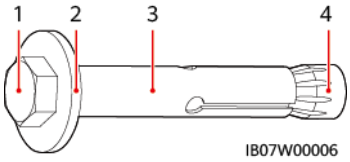

(1) Hexagonal bolt (2) Flat washer (3) Sleeve (4) Conical nut

NOTICE

- To prevent dust inhalation or contact with eyes, wear safety goggles and a dust mask when drilling holes.
- Use a vacuum cleaner to clean up dust in and around the holes, and measure the spacing. If the holes are inaccurately positioned, drill the holes again.
- Partially tighten the expansion bolts, and then remove the hexagonal bolts and flat washers of the upper two expansion bolts. Loosen the hexagonal bolts and flat washers of the lower two expansion bolts.

Figure 4-5 Installing expansion bolts

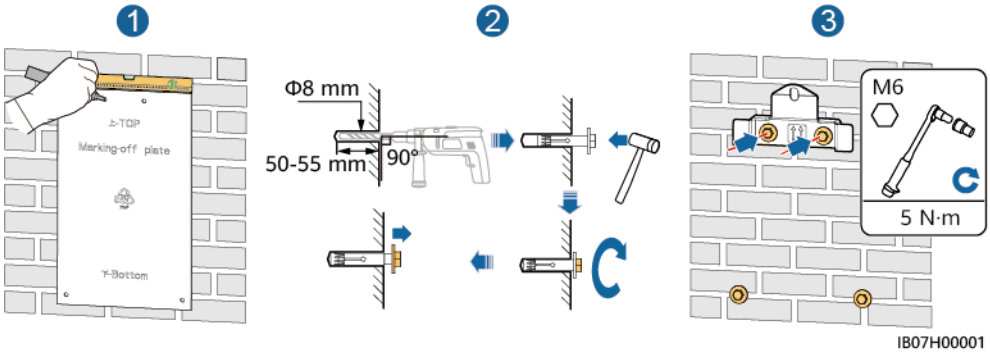

Step 3 Install the Smart Guard on the mounting bracket and tighten the nuts.

Figure 4-6 Installing the Smart Guard

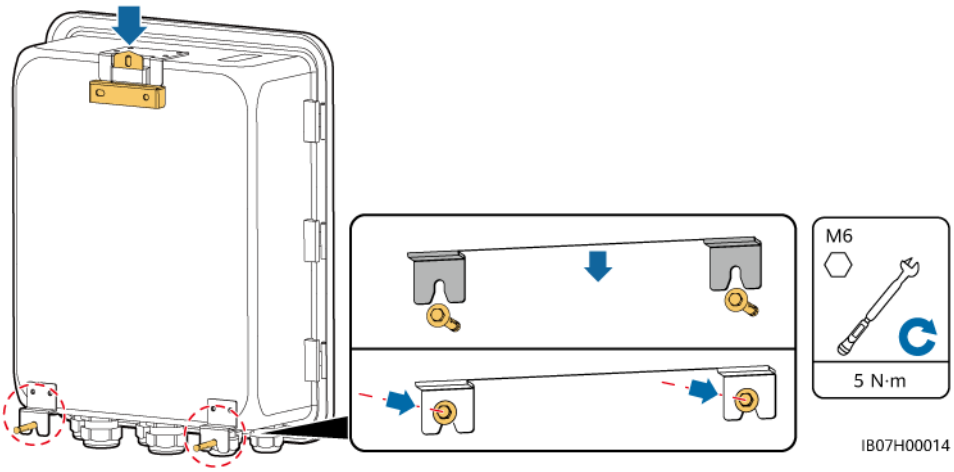

----End

5 Electrical Connections

Precautions

DANGER

Before connecting cables, ensure that the circuit breaker of the Smart Guard and all connected external switches are in **OFF** state. Otherwise, the high voltage may result in electric shocks.

DANGER

- The site must be equipped with qualified fire fighting facilities, such as fire sand and carbon dioxide fire extinguishers.
- Wear PPE and use dedicated insulated tools to avoid electric shocks or short circuits.

CAUTION

Stay away from the equipment when preparing cables to prevent cable scraps from entering the equipment. Cable scraps may cause sparks and result in personal injury and equipment damage.

WARNING

- Device damage caused by incorrect cable connections is not covered by the product warranty.
- Only qualified electrical technicians are allowed to connect cables.
- Operation personnel must wear proper PPE when connecting cables.
- Before connecting cables to ports, leave enough slack to reduce the tension on the cables and prevent poor cable connections.

 Copyright © Huawei Digital Power Technologies Co., Ltd.

NOTE

The cable colors shown in the electrical connection diagrams provided in this section are for reference only. Select cables in accordance with local cable specifications (green-and-yellow cables are only used for protective earthing).

5.1 Preparing Cables

Figure 5-1 Cable connections (dashed boxes indicate optional configuration)

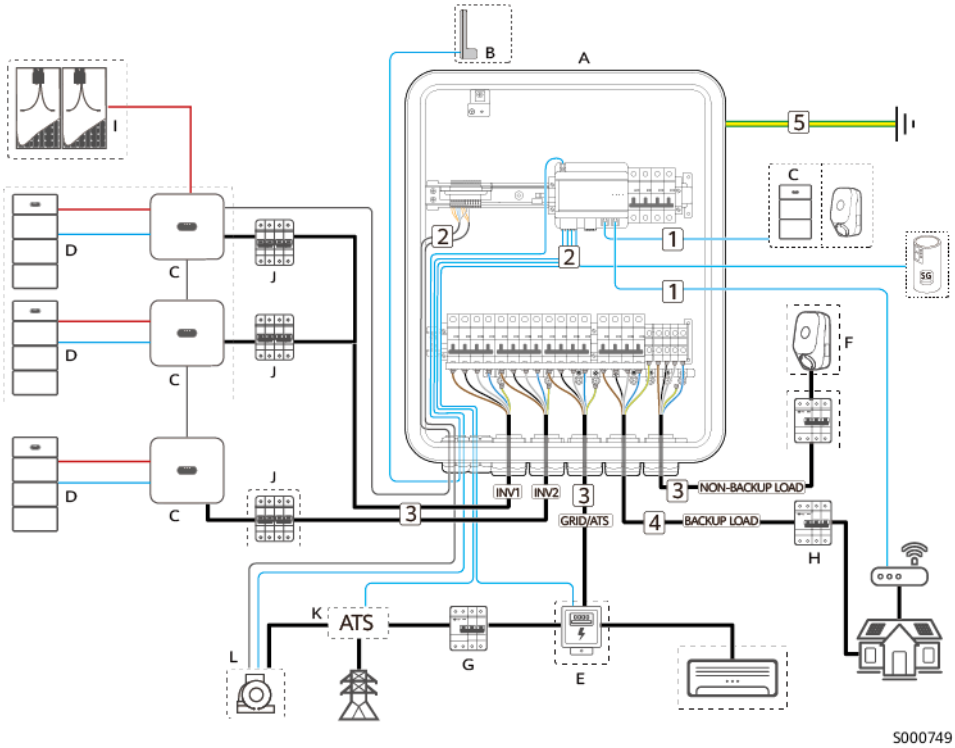

Table 5-1 Component description

No.	Component	Description	Source
A	Smart Guard	Three-phase Smart Guard: ● If MAP0 series inverters are connected to the Smart Guard, the backup port of the Smart Guard can be connected to single-phase loads and three-phase loads. ● If M1 or MB0 series inverters are connected to the Smart Guard, the backup load port of the Smart Guard can be connected only to single-phase loads. Three-phase loads need to be connected to non-backup load ports. ● If a parallel system that consists of MAP0 and M1, M5, or MB0 series inverters is connected to the Smart Guard, the backup load port of the Smart Guard can be connected to single-phase loads and three-phase loads.	Purchased from Huawei
B	External WLAN antenna	● If you do not want to use an FE network cable and the signal quality is poor, you can install an external antenna to enhance WLAN signals. ● Part number: 27014721	Purchased from Huawei
C	Inverter	● SUN2000-(3KTL-12KTL)-M1 ● SUN2000-(12K-25K)-MB0 ● SUN5000-(17K, 25K)-MB0 ● SUN2000-(5K-12K)-MAP0 ● SUN5000-(8K, 12K)-MAP0	Purchased from Huawei
D	ESS	● LUNA2000-(5-30)-S0 ● LUNA2000-(7, 14, 21)-S1	Purchased from Huawei
E	Power meter	If some of loads are connected to the Smart Guard, the recommended power meter models are DTSU666-H, DTSU666-H 250A/50mA, DTSU71, DHSU1079-CT, and YDS60-C24.	Purchased from Huawei
F	Huawei charger	● SmartCharger-22KT-S0 ● SmartCharger-7KS-S0	Purchased from Huawei
G	Main circuit breaker	TN-S/TN-C-S/TT system: The main circuit breaker must provide the leakage protection function and its rated voltage must be at least 415 V AC. ● Its rated residual operating current ≥ Number of M1 or MAP0 inverters x 100 mA ● Its rated residual operating current ≥ Number of MB0 inverters x 300 mA	Prepared by the customer
		TN-C system: No RCD is required.	

No.	Component	Description	Source
H	RCD	TN-S/TN-C-S/TT system: An RCD must be installed before the backup load, and its rated voltage must be at least 415 V AC. • Its rated residual operating current ≥ Number of M1 or MAP0 inverters x 100 mA • Its rated residual operating current ≥ Number of MB0 inverters x 300 mA	Prepared by the customer
		TN-C system: No RCD is required.	
I	PV string	A PV string is composed of the PV modules connected in series and works with optimizers.	Prepared by the customer
J	AC switch of the inverter	• Use the inverter AC input power cable of the specifications recommended for the Smart Guard to reduce the number of AC switches needed. For details, see **Table 5-3**. • If the AC input power cable of the specifications recommended for an inverter is used and the AC switch current ratings for the Smart Guard and inverter do not match each other, install an AC switch that meets the inverter requirements to ensure that the inverter can be safely disconnected from the Smart Guard if an exception occurs.	Prepared by the customer
K	ATS	In the grid+generator scenario, an ATS must be installed. Select an ATS based on the requirements of the Smart Guard. For details, see **A ATS Parameter Requirements**.	Prepared by the customer
L	Generator	Select a generator based on the residential load power and Smart Guard requirements. For details, see **B Generator Parameter Requirements**.	Prepared by the customer

Table 5-2 Cable description

No.	Cable	Type	Recommended Specifications	Source
1	FE communications cable (SmartAssistant)	Recommended: a CAT 5E network cable (internal resistance ≤ 1.5 ohms/10 m), and a RJ45 connector	• Conductor cross-sectional area: 0.12–0.2 mm^2 • Cable outer diameter: 4–8 mm	Prepared by the customer

No.	Cable	Type	Recommended Specifications	Source
2	Heat pump control signal cable	Two-core outdoor twisted pair cable	• Conductor cross-sectional area: 0.2–1 mm^2 • Cable outer diameter: 4–8 mm	Prepared by the customer
	Power meter signal cable			
	Position feedback signal upon grid connection			
	Generator signal cable	Multi-core outdoor shielded twisted pair cable		
	Inverter signal cable[a]	Multi-core outdoor shielded twisted pair cable	• Conductor cross-sectional area: 0.2–1 mm^2 • Cable outer diameter: 4–8 mm	• Prepared by the customer • Purchased from Huawei (5 m)
3	Inverter AC input power cable (INV1)	• Not using the PE equipotential bonding point at the AC port: four-core (L1, L2, L3, and N) outdoor copper cable • Using the PE equipotential bonding point at the AC port: five-core (L1, L2, L3, N, and PE) outdoor copper cable	• Conductor cross-sectional area: – M1 (3KTL–12KTL): 4–6 mm^2 – MAP0 (5K–12K): 4–6 mm^2 – MB0 (12K–25K): 10–16 mm^2 • Cable outer diameter: 10–32 mm	Prepared by the customer
	Inverter AC input power cable (INV2)			

No.	Cable	Type	Recommended Specifications	Source
	Grid AC output power cable AC output power cable for the non-backup load	• Not using the PE equipotential bonding point at the AC port: four-core (L1, L2, L3, and N) outdoor copper cable • Using the PE equipotential bonding point at the AC port: five-core (L1, L2, L3, N, and PE) outdoor copper cable • Using the PE equipotential bonding point at the AC port in the TN-C system: four-core (L1, L2, L3, and PEN) outdoor copper cable	• Conductor cross-sectional area: 4–16 mm^2 • Cable outer diameter: 10–32 mm	
4	AC output power cable for the backup load[b]	TN-S/TN-C-S/TT system: • SmartGuard-63A-T0: five-core (L1, L2, L3, N, and PE) outdoor copper cable • SmartGuard-63A-AUT0: four-core (L1, L2, L3, and N) outdoor copper cable TN-C system: four-core (L1, L2, L3, and PEN) outdoor copper cable	• Conductor cross-sectional area: 4–16 mm^2 • Cable outer diameter: 10–32 mm	Prepared by the customer
5	PE cable	Single-core outdoor copper cable and M6 OT terminal	Conductor cross-sectional area: 16 mm^2	Prepared by the customer
Note a: The Smart Guard is connected to the inverter through a signal cable (part number: 04072551) purchased from Huawei, as shown in the following figure. Note b: The PEN of the SmartGuard-63A-T0 backup load port must be connected, but the PEN of the SmartGuard-63A-AUT0 backup load port does not need to be connected.				

Figure 5-2 Signal cable (purchased from Huawei) connecting the Smart Guard to the inverter

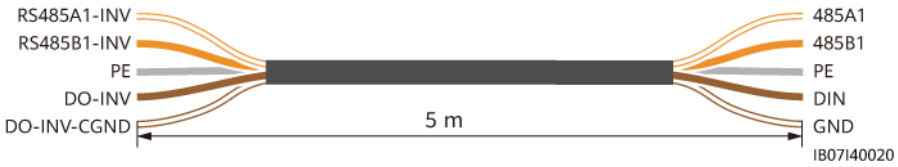

NOTE

- The minimum cable cross-sectional area must meet local standards.
- The factors to be considered in cable selection include the rated current, cable type, routing mode, ambient temperature, and maximum acceptable line loss.
- For details about how to connect the ESS to the inverter, see the inverter user manual.

5.2 Connecting a PE Cable

Precautions

DANGER

- Ensure that the PE cable is securely connected. Otherwise, electric shocks may occur.
- TN-S/TN-C-S/TT system: Do not connect the neutral wire to the enclosure as a PE cable. Otherwise, electric shocks may occur.

NOTE

- The PE point at the AC output port is used only as a PE equipotential bonding point, and cannot substitute for the PE point on the enclosure.
- It is recommended that silicone grease or paint be applied around the ground terminal after the PE cable is connected.

Procedure

Step 1 Crimp an OT terminal.

NOTICE

- Avoid scratching the core wire when stripping a cable.
- The cavity formed after the conductor crimp strip of the OT terminal is crimped must wrap the core wire completely. The core wire must make close contact with the OT terminal.
- Wrap the wire crimping area with heat shrink tubing or insulation tape. The heat shrink tubing is used as an example.
- Use a heat gun carefully to avoid heat damage to the equipment.

Figure 5-3 Crimping an OT terminal

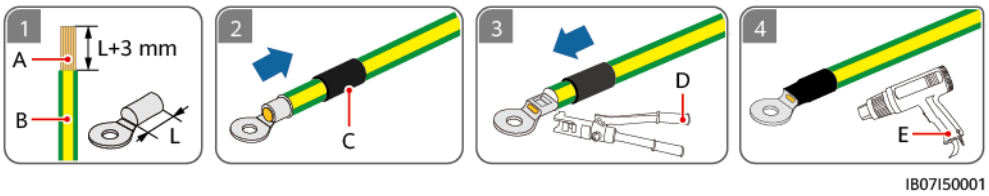

 Copyright © Huawei Digital Power Technologies Co., Ltd.

(A) Core wire (B) Insulation layer (C) Heat shrink tubing

(D) Hydraulic pliers (E) Heat gun

Step 2 Connect the PE cable.

Figure 5-4 Connecting the PE cable

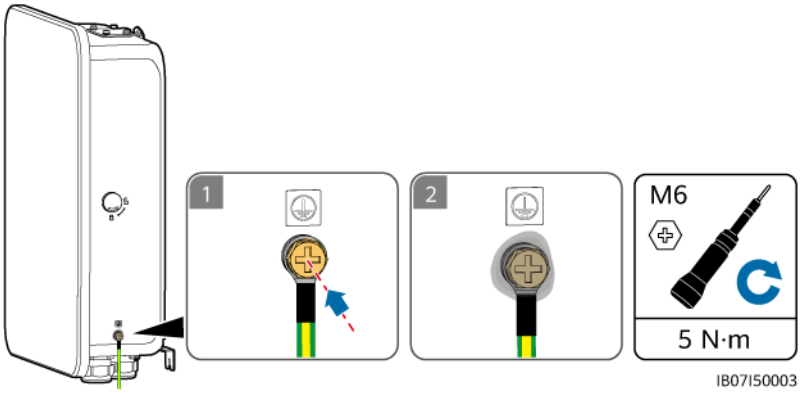

----End

5.3 Opening the Maintenance Compartment

Precautions

DANGER

- Before opening the maintenance compartment door, turn off the main circuit breaker, shut down the inverter, and turn off the DC switches of the inverter and battery.
- Before opening the maintenance compartment cover, turn off the backup load circuit breaker, the grid AC circuit breaker, and two inverter AC circuit breakers inside the Smart Guard. Ensure that the bypass switch is off.
- During normal use, do not operate the bypass switch and ensure that it is off.

CAUTION

- If you need to open the maintenance compartment door on rainy or snowy days, take protective measures to prevent rain or snow from entering the maintenance compartment. If protective measures are unavailable, do not open the maintenance compartment door on rainy or snowy days.
- Do not leave unused screws in the maintenance compartment.

Procedure

Step 1 Unlock and open the maintenance compartment door using the delivered key, and remove the cushioning material.

Figure 5-5 Opening the maintenance compartment door

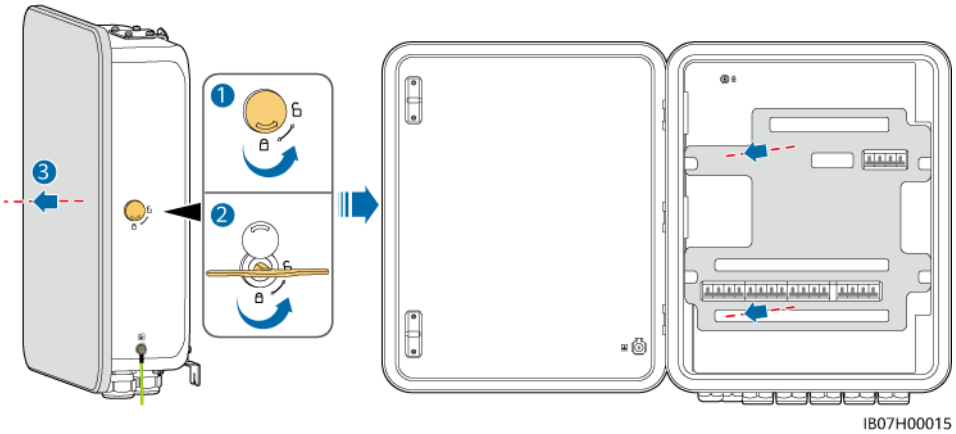

NOTE

Dispose of the removed cushioning material according to waste sorting regulations.

Step 2 Turn off the four switches shown in the figure.

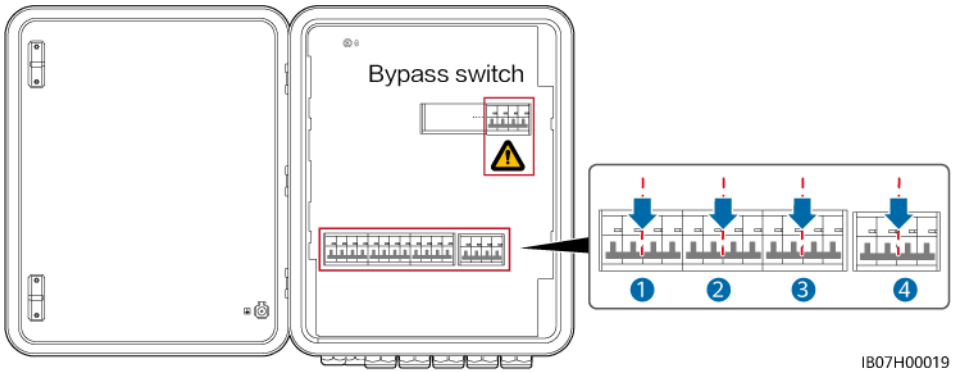

Step 3 Remove the screw from the maintenance compartment cover, and open the cover.

Figure 5-6 Opening the maintenance compartment cover

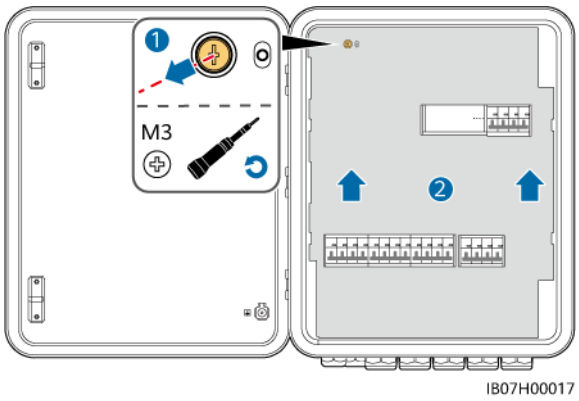

----End

 Copyright © Huawei Digital Power Technologies Co., Ltd.

5.4 Installing the Grid AC Output Power Cable

Precautions

- TN-S/TN-C-S/TT system: A main circuit breaker with the leakage protection function must be installed. Its rated voltage must be at least 415 V AC. Its rated residual operating current must be ≥ Number of M1 or MAP0 inverters x 100 mA or ≥ Number of MB0 inverters x 300 mA.
- TN-C system: No residual current device (RCD) is required.
- TN-S/TN-C-S/TT system: Ensure that the neutral wires of the backup load, power grid, non-backup load, and inverter are not connected outside the Smart Guard.
- Ensure that all the L1, L2, L3, and N wires are connected in correct phase sequence. Do not connect the L wire to the N wire port. Otherwise, loads may be damaged.
- Ensure that the N wire is securely connected. Otherwise, loads may be damaged due to overvoltage caused by voltage imbalance.

Procedure

Step 1 If a generator is installed, its N or PEN wire must be grounded. Otherwise, the Smart Guard will report a generator grounding exception alarm.

Figure 5-7 Generator neutral wire grounding

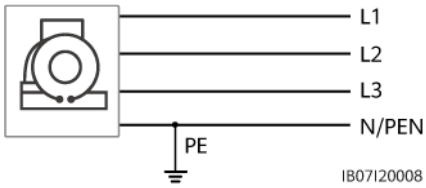

Step 2 Crimp AC cord end terminals. You can crimp AC cord end terminals for a four-core or five-core cable.

NOTE

The AC cord end terminals delivered with the product are mainly used for cables with a cross-sectional area of 16 mm^2. If cables with a cross-sectional area of less than 16 mm^2 are used, select AC cord end terminals that meet the requirements.

Figure 5-8 Crimping AC cord end terminals (TN-S/TN-C-S/TT system)

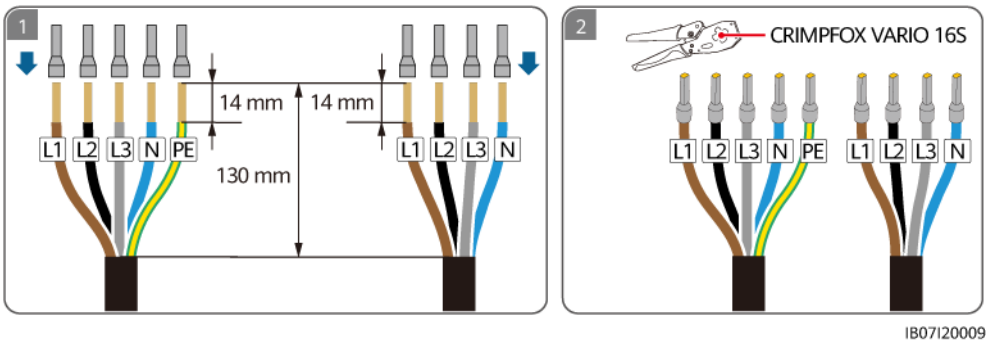

Figure 5-9 Crimping AC cord end terminals (TN-C system)

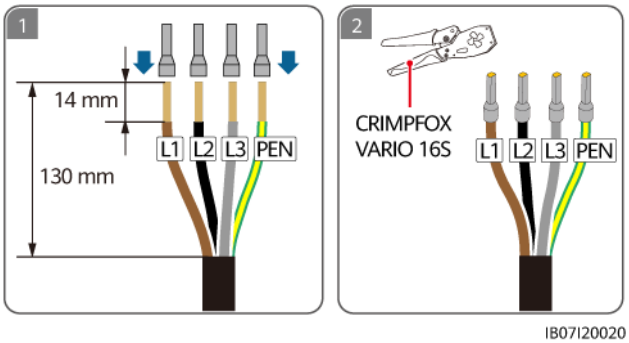

Step 3 Connect the grid AC output power cable.

Figure 5-10 Connecting the grid AC output power cable (TN-S/TN-C-S/TT system)

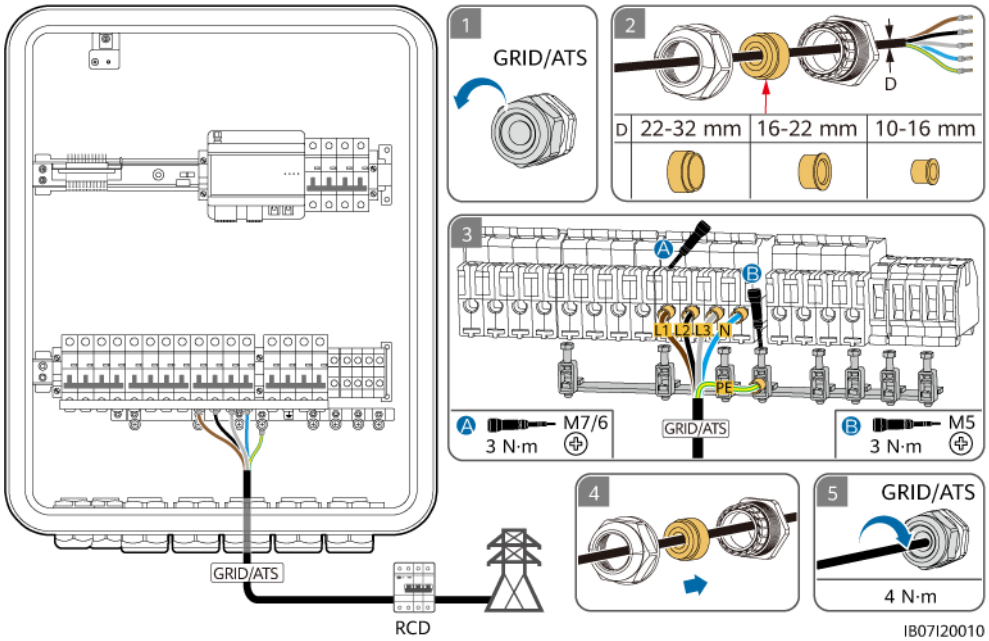

Figure 5-11 Connecting the grid AC output power cable (TN-C system)

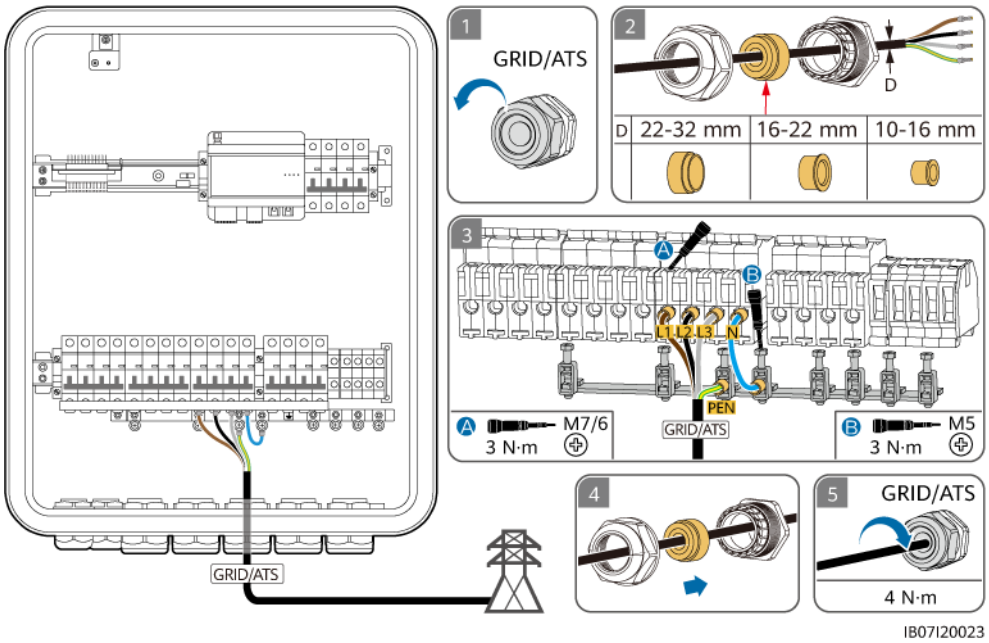

NOTICE

- TN-S/TN-C-S/TT system: The four-core cable and five-core cable are connected in the same way except that PE is not connected for the four-core cable.
- The PE point at the AC port is used only as a PE equipotential bonding point, and cannot substitute for the PE point on the enclosure.
- Ensure that the cable jacket is inside the connector.
- Insert the exposed core wires completely into the holes.
- Connect the AC power cable securely. Otherwise, the device may fail to operate properly or the AC connector may be damaged.
- Ensure that the cables are not twisted.

NOTE

The cable colors shown in the figures are for reference only. Select an appropriate cable according to the local standards.

----End

5.5 Installing the Inverter AC Input Power Cable

Precautions

- In any earthing system, connect cables according to the following figures. Do not connect the AC neutral wire of the inverter to the PE or PEN bar of the Smart Guard.
- Shut down the inverter, and turn off the DC switches of the inverter and ESS.

- If the AC input power cable of the specifications recommended for an inverter is used and the AC switch current ratings for the Smart Guard and inverter do not match each other, install an AC switch that meets the inverter requirements to ensure that the inverter can be safely disconnected from the Smart Guard if an exception occurs.
- The SUN2000-(5K-12K)-MAP0 and SUN5000-(8K, 12K)-MAP0 inverters cannot be connected together in a parallel system.
- TN-S/TN-C-S/TT system: Ensure that the neutral wires of the backup load, power grid, non-backup load, and inverter are not connected outside the Smart Guard.
- Ensure that all the L1, L2, L3, and N wires are connected in correct phase sequence. Do not connect the L wire to the N wire port. Otherwise, loads may be damaged.

Procedure

Step 1 Connect inverters to the Smart Guard based on the port requirements. Only the MAP0 model supports three or less inverters connected in parallel.

Table 5-3 Smart Guard port requirements

<table>
<tr><th>Inverter</th><th>Inverter Quantity</th><th colspan="2">Number of Inverters Connected to the Smart Guard Port</th><th>External AC Switch</th><th>Cable Specifications</th><th>External AC Switch Specifications</th></tr>
<tr><td>SUN2000-(12K-25K)-MB0</td><td>1</td><td>INV1 63A</td><td>1</td><td>Not required</td><td rowspan="2">• Conductor cross-sectional area: 10–16 mm^2
• Cable outer diameter: 10–32 mm</td><td rowspan="9">If an external AC switch is required, select an appropriate AC switch in accordance with local industry standards and regulations. It is recommended that you use a three-phase AC circuit breaker with a rated voltage greater than or equal to 415 V AC and a rated current of:
• 5K and 6K: 16 A
• 8K: 25 A
• 10K and 12K: 32 A</td></tr>
<tr><td>SUN5000-(17K, 25K)-MB0</td><td>1</td><td>INV1 63A</td><td>1</td><td>Not required</td></tr>
<tr><td>SUN2000-(3KTL-12KTL)-M1</td><td>1</td><td>INV2 32A</td><td>1</td><td>Not required</td><td rowspan="7">• Conductor cross-sectional area: 4–6 mm^2
• Cable outer diameter: 10–32 mm</td></tr>
<tr><td rowspan="5">SUN2000-(5K-12K)-MAP0</td><td>1</td><td>INV2 32A</td><td>1</td><td>Not required</td></tr>
<tr><td rowspan="2">2</td><td>INV1 63A</td><td>1</td><td>Required</td></tr>
<tr><td>INV2 32A</td><td>1</td><td>Not required</td></tr>
<tr><td rowspan="2">3</td><td>INV1 63A</td><td>2</td><td>Required</td></tr>
<tr><td>INV2 32A</td><td>1</td><td>Not required</td></tr>
<tr><td>SUN5000-(8K, 12K)-MAP0</td><td>1</td><td>INV2 32A</td><td>1</td><td>Not required</td></tr>
</table>

Inverter	Inverter Quantity	Number of Inverters Connected to the Smart Guard Port		External AC Switch	Cable Specifications	External AC Switch Specifications
	2	INV1 63A	1	Required		
		INV2 32A	1	Not required		
	3	INV1 63A	2	Required		
		INV2 32A	1	Not required		

Table 5-4 Inverter combination and quantity restriction

Inverter Combination	Max. Number of Parallel Inverters
MAP0+MAP0	3
M1+MAP0	One M1 and a maximum of two MAP0s. The power of inverters installed must meet the power requirements of the INV1 and INV2 ports on the Smart Guard.
M5+MAP0	One M5 and a maximum of two MAP0s. The power of inverters installed must meet the power requirements of the INV1 and INV2 ports on the Smart Guard.
MB0+MAP0	One MB0 and a maximum of two MAP0s. The power of inverters installed must meet the power requirements of the INV1 and INV2 ports on the Smart Guard.

 Copyright © Huawei Digital Power Technologies Co., Ltd.

Inverter Combination	Max. Number of Parallel Inverters
Note: ● When the M1, M5, or MB0 is connected to the MAP0 in parallel, the L1, L2, L3, and N wires of the M1, M5, or MB0 must be connected. ● In off-grid state, only the MAP0 runs off-grid, and the M1, M5, or MB0 does not output AC power. If an ESS and PV power are available, the M1 or MB0 can charge the ESS. ● When the MAP0 is connected to the M1, M5, or MB0 in parallel, the MAP0 does not support three-phase imbalance control, and the off-grid mode of the M1, M5, or MB0 does not take effect. ● Generators are not supported when the M1, M5, or MB0 is connected to the MAP0 in parallel. ● When the M1, M5, or MB0 is connected to the MAP0 in parallel, only the MAP0 can be used for off-grid deployment.	

Table 5-5 Version requirements for connecting the M1, M5, or MB0 to the MAP0 in parallel

Device	Version
SUN2000-(12KTL-25KTL)-M5	SUN2000MB V200R023C10SPC213 or later
SUN2000-(5KTL-12KTL)-M1	SUN2000MA V100R001C00SPC174 or later
SUN2000-10KTL-BEM1	SUN2000MA V100R001C00SPC174 or later
SUN2000-(12K-25K)-MB0	SUN2000MB V200R023C10SPC213 or later
SUN2000-(5K-12K)-MAP0	SUN2000MA V200R024C00SPC108 or later
SmartAssistant	SmartHEMS V100R025C00SPC120 or later
Smart Guard	BackupBoxA V100R024C00SPC103
App	25.4.100 or later
Management system	25.3.0.5 or later

Step 2 (Optional) Connect inverters in parallel.

Figure 5-12 Inverters connected in parallel (dashed boxes indicating optional components)

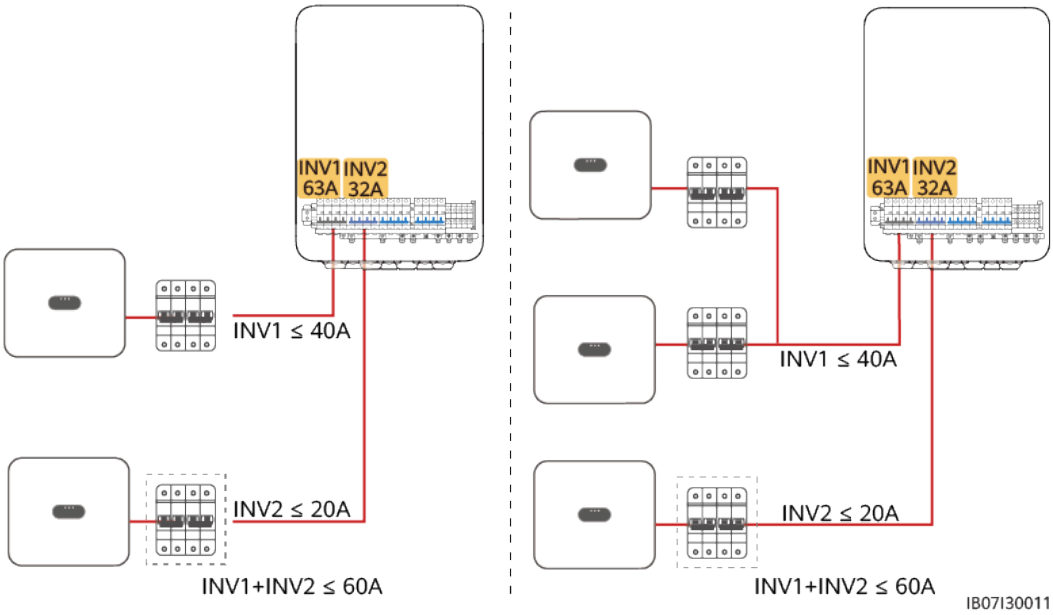

NOTE

The current of inverters connected to the INV1 port on the Smart Guard cannot exceed 40 A. The current of inverters connected to the INV2 port on the Smart Guard cannot exceed 20 A. The total current of inverters connected to the INV1 and INV2 ports on the Smart Guard cannot exceed 60 A.

The current at the output port of an inverter can be calculated according to the inverter power and grid voltage. Assume that the voltage is 230 V and the current at the output port of a 12 kW inverter is 12000 W x 1.1/3/230 V = 19.1 A. Then, the 12 kW inverter can be connected to the INV2 port of the Smart Guard.

Step 3 Crimp AC cord end terminals. You can crimp AC cord end terminals for a four-core or five-core cable.

NOTE

The AC cord end terminals delivered with the product are mainly used for cables with a cross-sectional area of 16 mm^2. If cables with a cross-sectional area of less than 16 mm^2 are used, select AC cord end terminals that meet the requirements.

Figure 5-13 Crimping AC cord end terminals

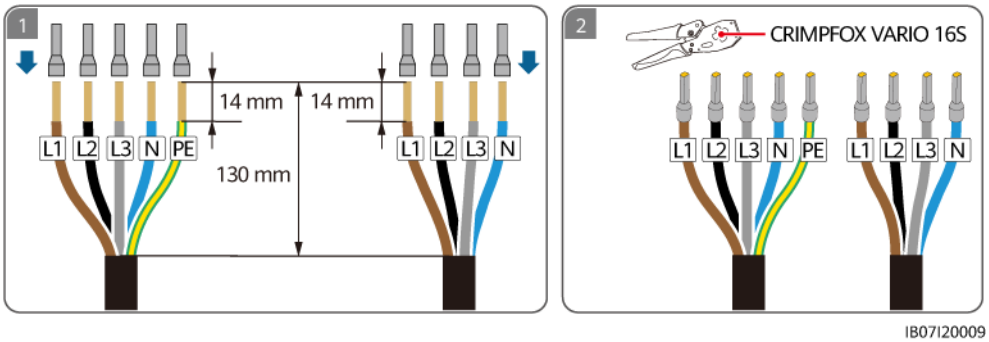

Step 4 Connect the inverter AC input power cables.

Figure 5-14 Connecting the inverter AC input power cables (dashed boxes indicating optional components)

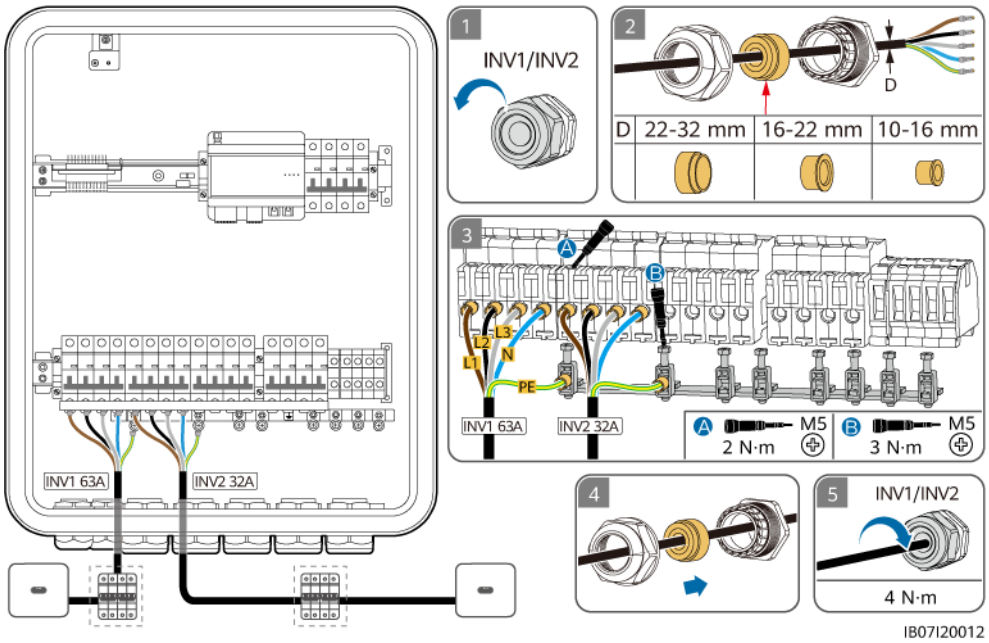

NOTICE

- The four-core cable and five-core cable are connected in the same way except that PE is not connected for the four-core cable.
- The PE point at the AC port is used only as a PE equipotential bonding point, and cannot substitute for the PE point on the enclosure.
- Ensure that the cable jacket is inside the connector.
- Insert the exposed core wires completely into the holes.
- Connect the AC power cable securely. Otherwise, the device may fail to operate properly or the AC connector may be damaged.
- Ensure that the cables are not twisted.

NOTE

The cable colors shown in the figures are for reference only. Select an appropriate cable according to the local standards.

----End

5.6 Installing the Backup Load Output Power Cable

Precautions

- TN-S/TN-C-S/TT system: An RCD must be installed before the backup load. During off-grid operation, the main circuit breaker does not provide

protection. Electric leakage on the loads may result in electric shocks. The rated voltage of the RCD must be at least 415 V AC. Its rated residual operating current must be ≥ Number of M1 or MAP0 inverters x 100 mA or ≥ Number of MB0 inverters x 300 mA.

- TN-C system: No residual current device (RCD) is required.
- If the power of backup loads exceeds the maximum off-grid power of the system, the inverter may be shut down due to overload. In this case, you need to shut down some loads. Alternatively, connect loads with lower priority to the non-backup load port.
- If the Smart Guard is used with MAP0 series inverters, its backup load port can be connected to single-phase loads and three-phase loads.
- If the Smart Guard is used with M1 and MB0 series inverters, its backup load port can be connected only to single-phase loads. Three-phase loads need to be connected to non-backup load ports.
- TN-S/TN-C-S/TT system: Ensure that the neutral wires of the backup load, power grid, non-backup load, and inverter are not connected outside the Smart Guard.
- Ensure that all the L1, L2, L3, and N wires are connected in correct phase sequence. Do not connect the L wire to the N wire port. Otherwise, loads may be damaged.

Procedure

Step 1 Crimp AC cord end terminals.

NOTE

The AC cord end terminals delivered with the product are mainly used for cables with a cross-sectional area of 16 mm^2. If cables with a cross-sectional area of less than 16 mm^2 are used, select AC cord end terminals that meet the requirements.

Figure 5-15 Crimping AC cord end terminals for the SmartGuard-63A-T0 (TN-S/TN-C-S/TT system)

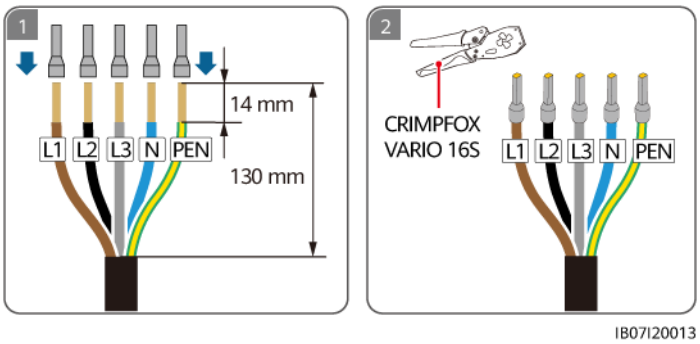

Figure 5-16 Crimping AC cord end terminals for the SmartGuard-63A-AUT0 (TN-S/TN-C-S/TT system)

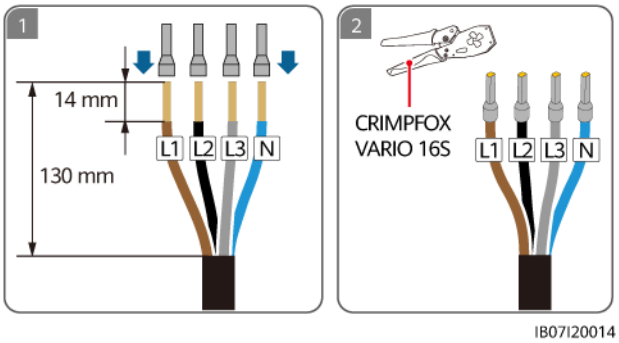

Figure 5-17 Crimping AC cord end terminals (TN-C system)

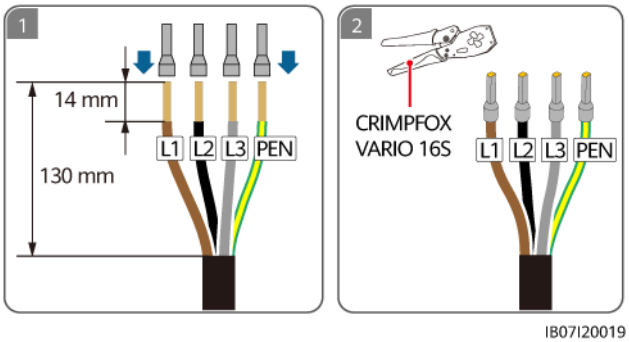

Step 2 Connect the output power cable to the backup load. Check the load to be connected based on the backup load requirements.

Table 5-6 Backup load requirements

Backup Load	MAP0	M1	MB0
Single-phase load	Supported	Supported	Supported
Three-phase load	Supported	Not supported	Not supported

Figure 5-18 Connecting the backup load output power cable of the SmartGuard-63A-T0 (TN-S/TN-C-S/TT system)

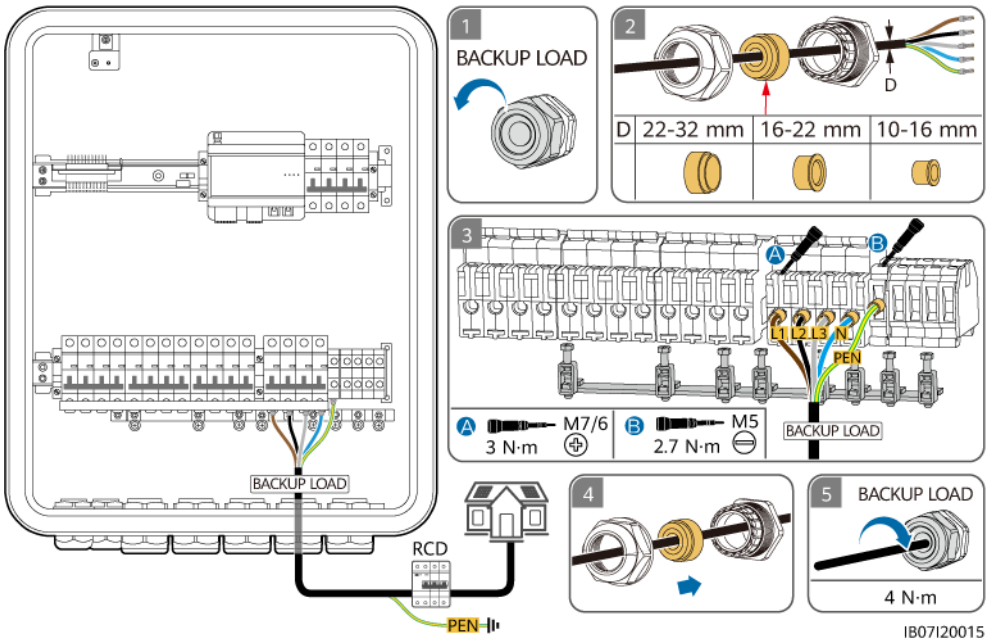

Figure 5-19 Connecting the backup load output power cable of the SmartGuard-63A-AUT0 (TN-S/TN-C-S/TT system)

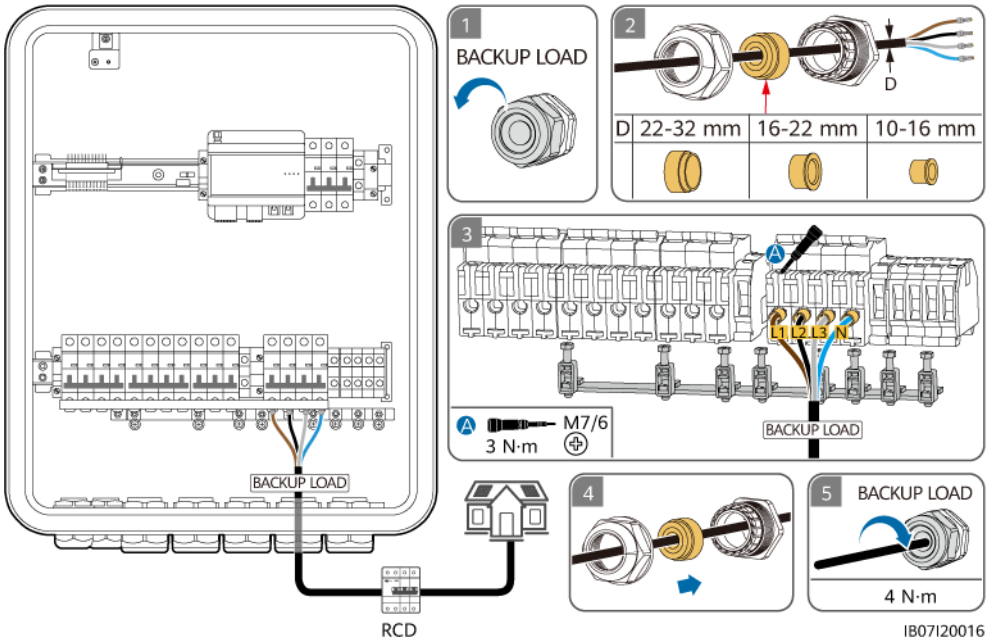

 Copyright © Huawei Digital Power Technologies Co., Ltd.

Figure 5-20 Connecting the backup load output power cable (TN-C system)

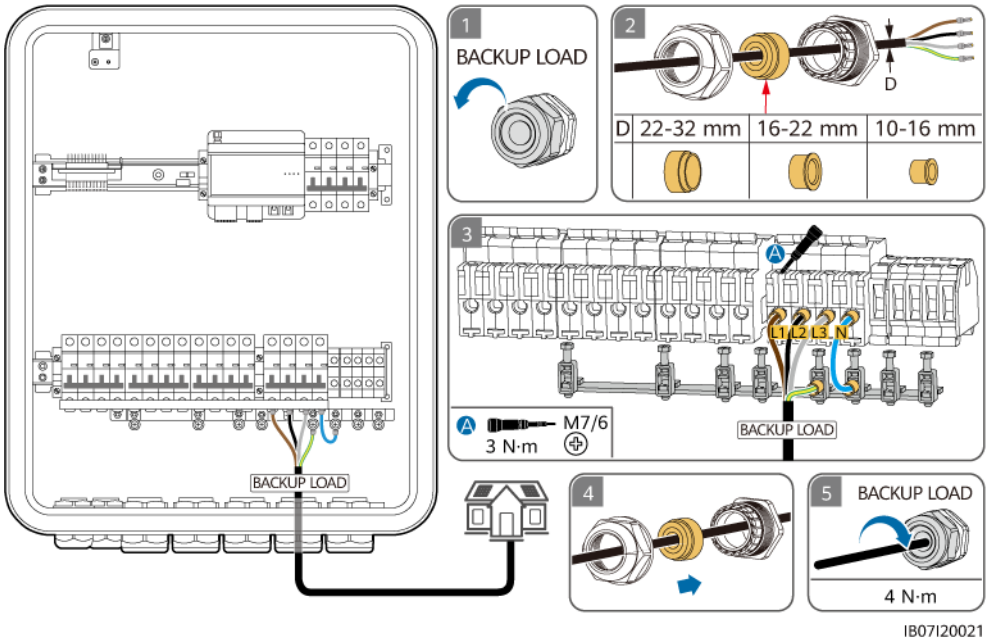

NOTICE

- TN-S/TN-C-S/TT system: The four-core cable and five-core cable are connected in the same way except that PE is not connected for the four-core cable.
- The PE point at the AC port is used only as a PE equipotential bonding point, and cannot substitute for the PE point on the enclosure.
- Ensure that the cable jacket is inside the connector.
- Insert the exposed core wires completely into the holes.
- Connect the AC power cable securely. Otherwise, the device may fail to operate properly or the AC connector may be damaged.
- Ensure that the cables are not twisted.

NOTE

The cable colors shown in the figures are for reference only. Select an appropriate cable according to the local standards.

----End

5.7 Installing the Non-backup Load Output Power Cable

Precautions

- TN-S/TN-C-S/TT system: Ensure that the neutral wires of the backup load, power grid, non-backup load, and inverter are not connected outside the Smart Guard.

- Ensure that all the L1, L2, L3, and N wires are connected in correct phase sequence. Do not connect the L wire to the N wire port. Otherwise, loads may be damaged.
- The non-backup load port can be connected to both single-phase and three-phase loads.
- TN-C system: No residual current device (RCD) is required.

Procedure

Step 1 Crimp AC cord end terminals. You can crimp AC cord end terminals for a four-core or five-core cable.

NOTE

The AC cord end terminals delivered with the product are mainly used for cables with a cross-sectional area of 16 mm^2. If cables with a cross-sectional area of less than 16 mm^2 are used, select AC cord end terminals that meet the requirements.

Figure 5-21 Crimping AC cord end terminals (TN-S/TN-C-S/TT system)

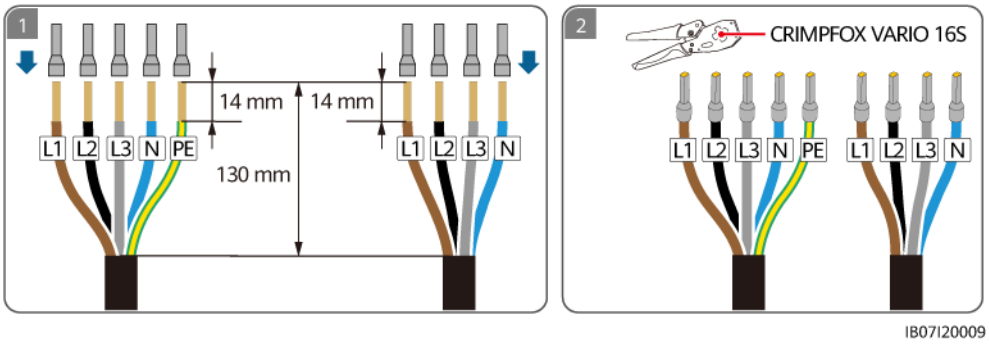

Figure 5-22 Crimping AC cord end terminals (TN-C system)

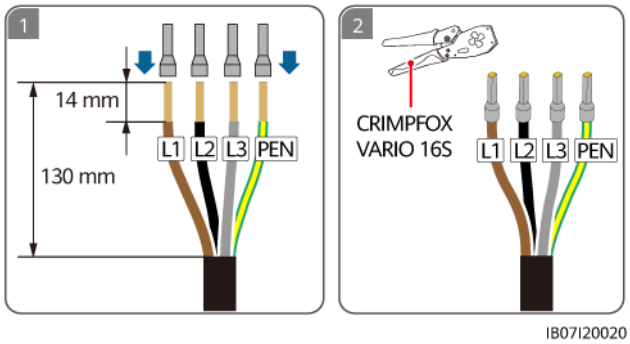

Step 2 Connect the non-backup load output power cable.

Figure 5-23 Connecting the non-backup load output power cable (TN-S/TN-C-S/TT system)

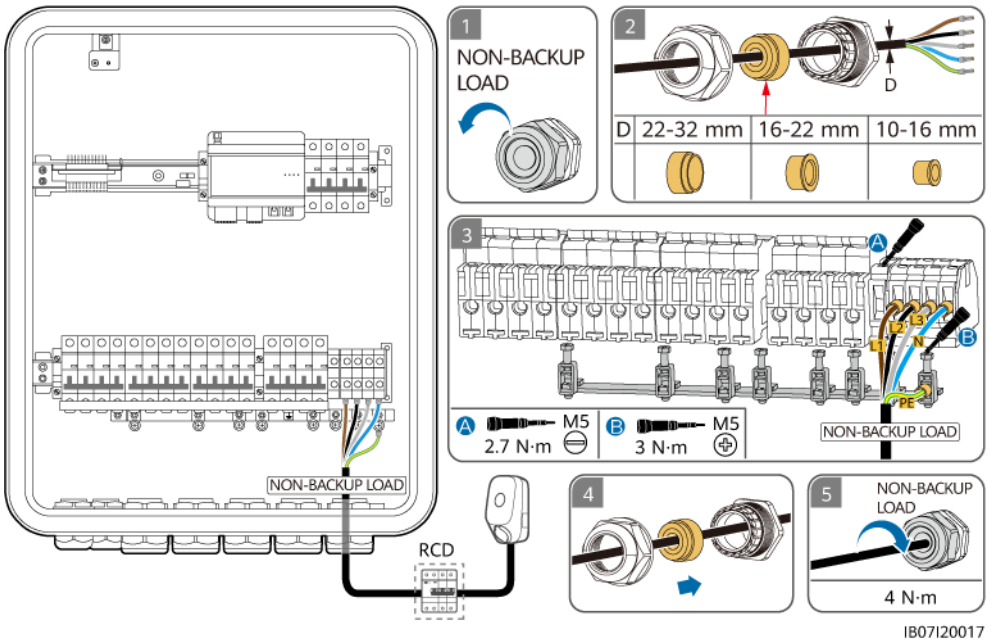

Figure 5-24 Connecting the non-backup load output power cable (TN-C system)

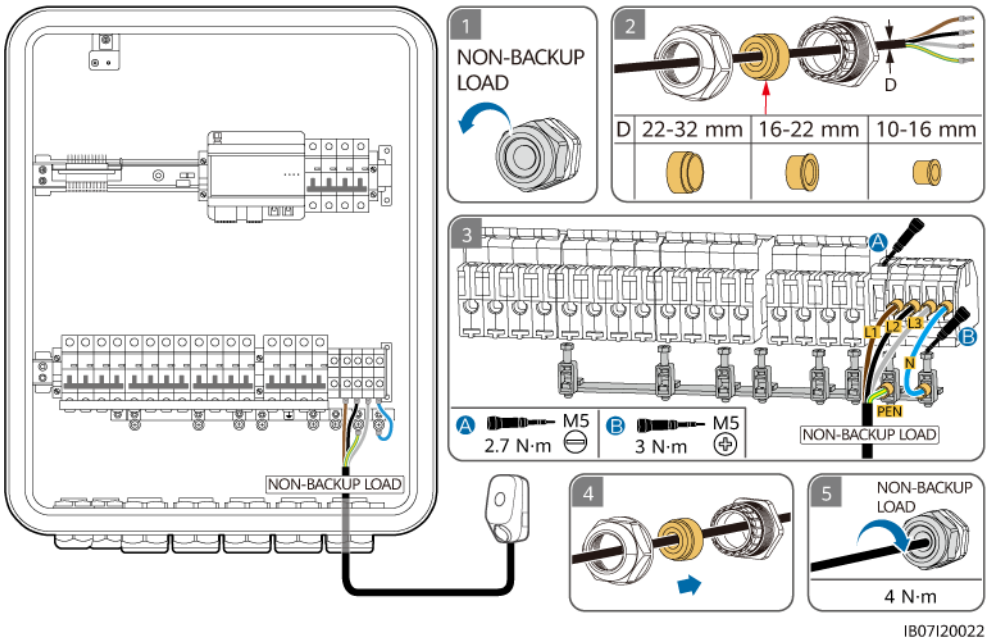

NOTICE

- TN-S/TN-C-S/TT system: The four-core cable and five-core cable are connected in the same way except that PE is not connected for the four-core cable.
- The PE point at the AC port is used only as a PE equipotential bonding point, and cannot substitute for the PE point on the enclosure.
- Ensure that the cable jacket is inside the connector.
- Insert the exposed core wires completely into the holes.
- Connect the AC power cable securely. Otherwise, the device may fail to operate properly or the AC connector may be damaged.
- Ensure that the cables are not twisted.

NOTE

The cable colors shown in the figures are for reference only. Select an appropriate cable according to the local standards.

----End

5.8 Installing the Smart Guard Signal Cables

Precautions

When laying out signal cables, separate them from power cables and keep them away from strong interference sources to prevent communication interruption.

For more wiring scenarios, see **Residential Solution Mapping Relationship and Wiring Guide**.

Procedure

Step 1 Crimp signal cable terminals. Only MAP0 inverters require parallel connection of signal cables.

Figure 5-25 Crimping cord end terminals for the signal cable (the dashed box indicates an optional component)

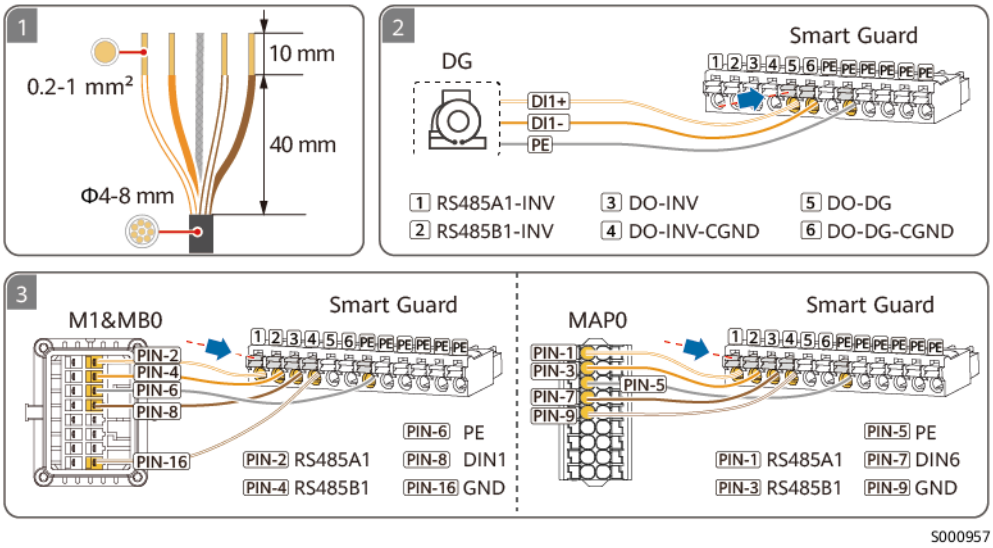

Table 5-7 COM ports on the Smart Guard

No.	Definition	Function	Description
1	COM-1 RS485A1_INV	RS485A, RS485 differential signal+	Connect to the RS485 signal ports of the inverter.
2	COM-2 RS485B1_INV	RS485B, RS485 differential signal–	
3	COM-3 DO_INV	Digital output signal+	Connect to the on/off-grid control signal ports of the inverter.
4	COM-4 DO_INV_CGND	CGND	
5	COM-5 DO_DG	Digital output signal+	Connect to the generator control signal port.
6	COM-6 DO_DG_CGND	CGND	
PE	PE	Shield layer grounding	Grounds the shield layer of a communications cable.

Step 2 (Optional) Connect signal cables in parallel for MAP0 inverters.

Figure 5-26 Parallel connection of signal cables (using three inverters connected in parallel as an example)

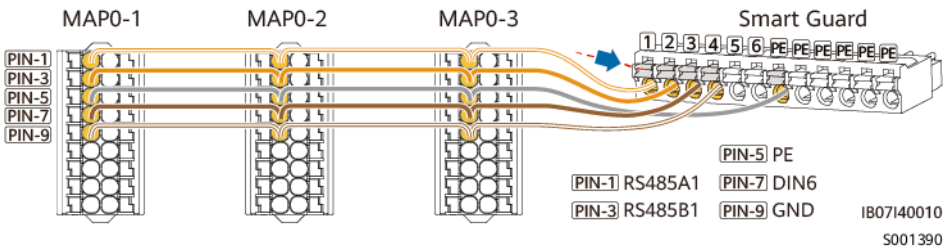

Step 3 Connect the signal cables of the Smart Guard.

Figure 5-27 Connecting the Smart Guard signal cables (the dashed box indicates an optional component)

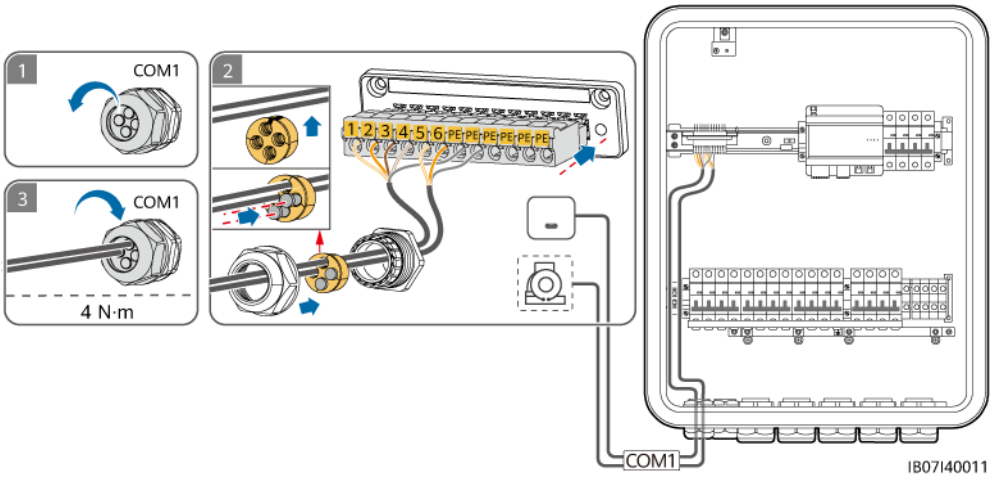

----End

5.9 Installing the Smart Guard Signal Cables (SmartAssistant)

Precautions

- When laying out signal cables, separate them from power cables and keep them away from strong interference sources to prevent communication interruption.
- Ensure that the protection layer of the signal cable is inside the connector, surplus core wires are cut off from the protection layer, the exposed core wires are inserted completely into the holes, and the cable is connected securely.

Port Definitions

1. FE port definitions

Figure 5-28 Port definitions

Definition	Function	Description
10 PIN	-	You do not need to connect a cable. It is used for internal cable connection of the Smart Guard.
LAN	RJ45 network port	Connects to a Huawei charger or an ESS.
WAN	RJ45 network port	Connects to a router for the Smart Guard to connect to the management system.

2. Definitions of the 14 pins

Figure 5-29 Pin definitions

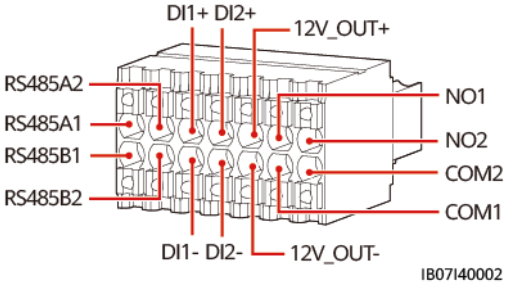

Definition	Function	Description
485A1	RS485B, RS485 differential signal+	Not connected
485B1	RS485A, RS485 differential signal–	
485A2	RS485B, RS485 differential signal+	Connect to the RS485 port of the power meter if some of loads are connected to the Smart Guard.
485B2	RS485A, RS485 differential signal–	
DI1+	Digital input signal 1+	Connect to the ATS port for the position feedback signal upon grid connection. The ATS is used only in the mains+generator scenario.
DI1–	Digital input signal 1–	
DI2+	Digital input signal 2+	(Optional) Connect to the generator alarm signal port.
DI2–	Digital input signal 2–	

Definition	Function	Description
12V_OUT+	12 V power output+	Optional. 12 V power output ports of the SmartAssistant, which support 100 mA load, output voltage of 9.5–13.2 V, and 12 V@30 mA capability of driving the external relay coil. The external relay works with NO1 and COM1 to control the SG Ready heat pump.
12V_OUT–	12 V power output–	
NO1	Digital output signal	Optional. SG Ready heat pump control signal ports, which support a maximum of 12 V signal voltage and a maximum contact output capability of 12 V DC@1 A. The NO and COM contacts are normally open and COM is a common point.
COM1	Digital output signal	
NO2	Digital output signal	Reserved
COM2	Digital output signal	

Procedure

Step 1 (Optional) Connect the signal cable to the 14-pin terminal.

NOTE

When the SG Ready heat pump provides 12 V power supply, the SmartAssistant directly controls the heat pump. When the SG Ready heat pump cannot provide 12 V power supply, the SmartAssistant controls the heat pump through an external relay.

Figure 5-30 Connecting the signal cable to the 14-pin terminal

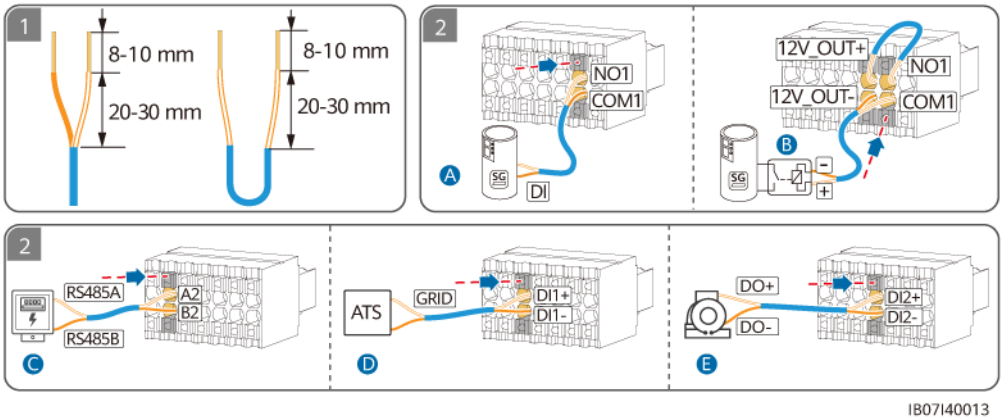

(A) Direct connection between the SmartAssistant and the heat pump	(B) Heat pump control through an external relay	(C) Power meter RS485 signal
(D) Position feedback signal upon grid connection	(E) Generator alarm signal	

Step 2 (Optional) If some of loads are connected to the Smart Guard, connect the power meter communications cable.

Figure 5-31 Connecting the power meter communications cable

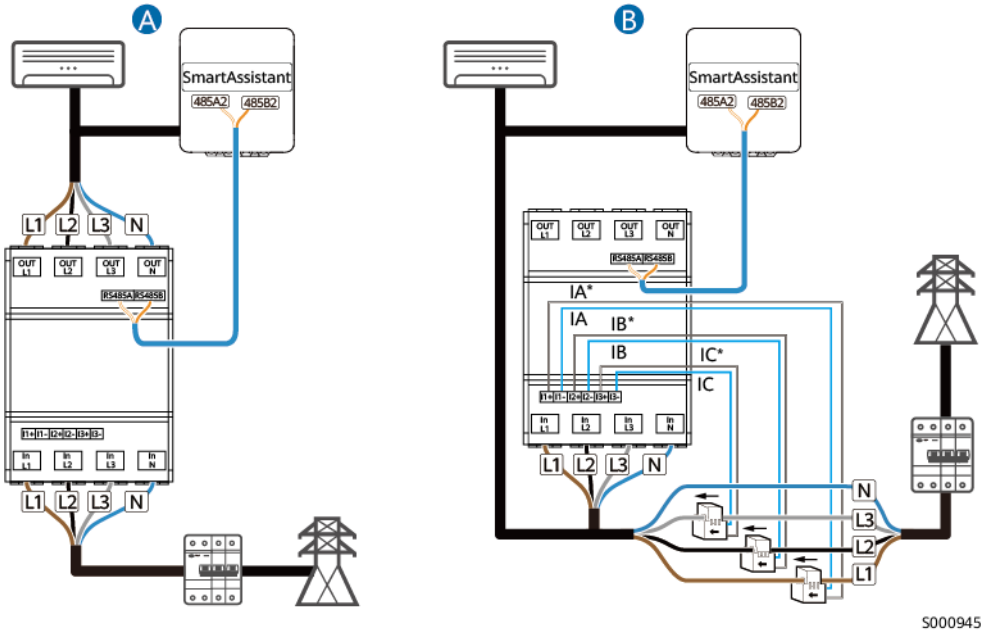

(A) Direct cable connection (B) Cable connection through the CT

Step 3 (Optional) Connect the FE communications cable.

NOTE

- The LAN port can be used to connect one Huawei charger or one ESS to the SmartAssistant over FE.
- The Smart Guard can be connected to smart switches and other smart loads. Other smart loads include third-party chargers, EEBUS heat pumps, and heating rods, which need to be connected to the router of the SmartAssistant over FE or WLAN. For details about how to connect smart switches and other smart loads, see **Residential Smart PV Solution User Manual (SmartAssistant Networking and Smart Guard Networking)**.
- The Smart Guard contains the SmartAssistant. The SmartAssistant can be connected to the router over FE or WLAN. If WLAN is used, the router must be close to the Smart Guard.
- The SmartAssistant can be equipped with an external WLAN antenna. If you do not want to use an FE network cable and the signal quality is poor, you can install an external antenna to enhance WLAN signals.

Figure 5-32 FE communications cable (dashed boxes indicate optional components)

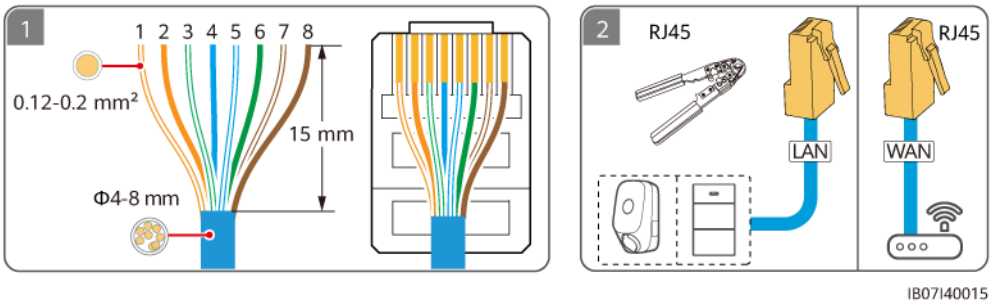

(1) White-and-orange	(2) Orange	(3) White-and-green	(4) Blue
(5) White-and-blue	(6) Green	(7) White-and-brown	(8) Brown

Step 4 Connect the SmartAssistant signal cables. If an external antenna is required, attach it to the marked area in the upper left corner of the Smart Guard by magnet.

Figure 5-33 Connecting SmartAssistant signal cables (dashed boxes indicate optional components)

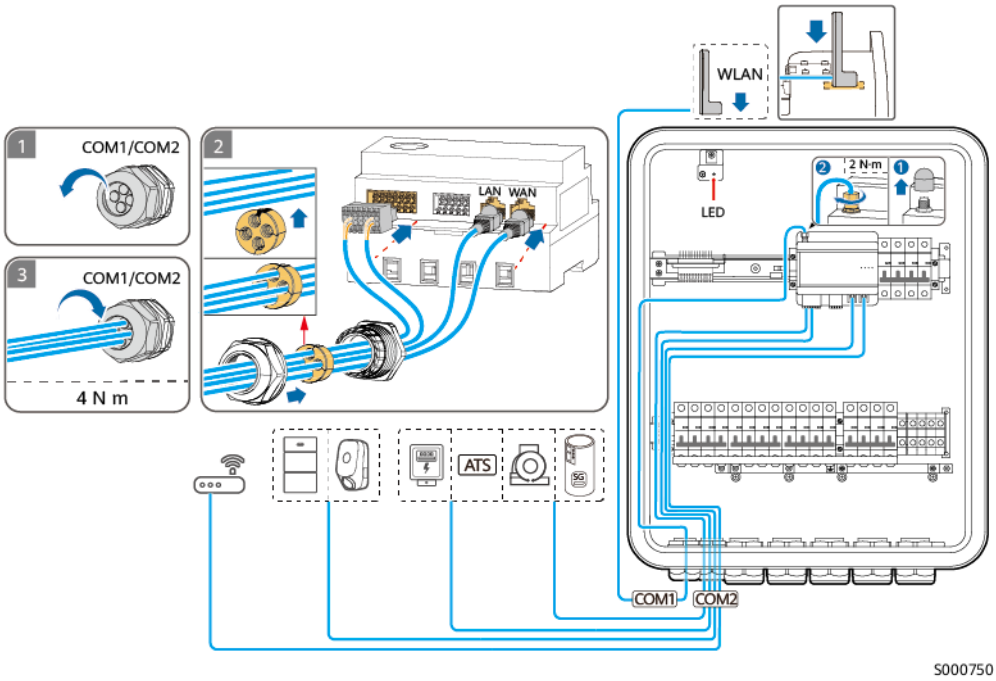

----End

6 System Commissioning

6.1 Check Before Power-On

WARNING

Check whether the terminals of the Smart Guard are correctly connected according to the document.

Table 6-1 Checklist

No.	Check Item	Acceptance Criteria
1	Smart Guard	The Smart Guard is installed correctly and securely.
2	Cable routing	Cables are routed properly as required by the customer.
3	Cable ties	Cable ties are evenly distributed and no burr exists.
4	Reliable grounding	The PE cable is connected correctly, securely, and reliably.
5	Switches	The switches of the device and all the switches connected to the device are in **OFF** state.
6	Cable connection	All cables are correctly and securely connected.
7	Unused terminal and port	Unused terminals and ports are locked by waterproof glands.
8	Cable connection positions in the maintenance compartment	After cable connections are complete, foreign particles, such as talcum powder peeled off from multi-core wires, peeled-off cable sheath, and metal matters, are removed from the maintenance compartment.

 Copyright © Huawei Digital Power Technologies Co., Ltd.

No.	Check Item	Acceptance Criteria
9	Installation environment	The installation space is proper, and the installation environment is clean and tidy.

6.2 System Power-On

6.2.1 Method 1: Power-On in On-Grid Mode or by Starting the Generator

Precautions

DANGER

- Wear personal protective equipment and use dedicated insulated tools to avoid electric shocks or short circuits.

NOTICE

Before the equipment is put into operation for the first time, ensure that the parameters are set correctly by professional personnel. Incorrect parameter settings may result in noncompliance with local grid connection requirements and affect the normal operations of the equipment.

6.2.1.1 Closing the Maintenance Compartment

NOTE

- Before closing the maintenance compartment, remove tools and unused screws from the maintenance compartment.
- Keep the delivered keys properly for future use.

Step 1 Install the cover of the maintenance compartment, and tighten the screw on the cover.

Figure 6-1 Closing the cover

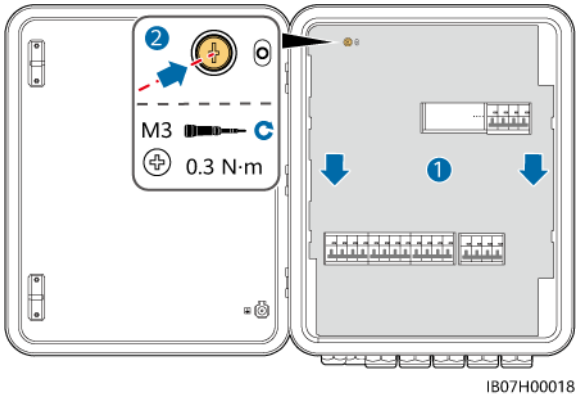

Step 2 Turn on the four switches shown in the following figure (using the connection to three parallel MAP0 inverters as an example).

Figure 6-2 Turning on the switches

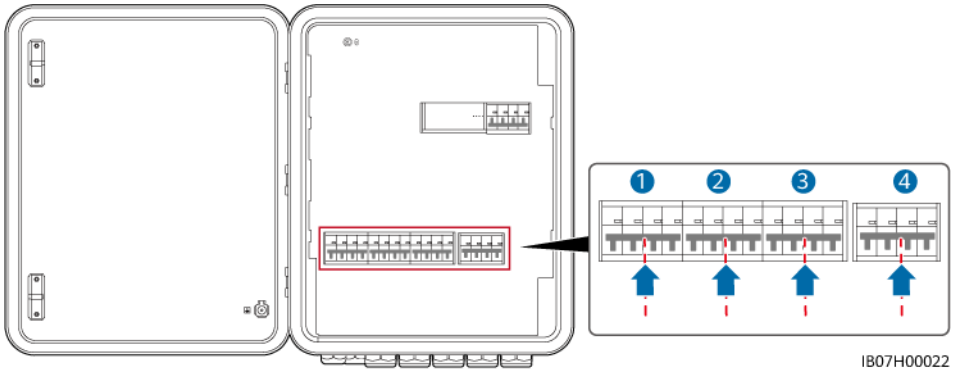

Step 3 Close the maintenance compartment door and lock the Smart Guard.

Figure 6-3 Closing the maintenance compartment

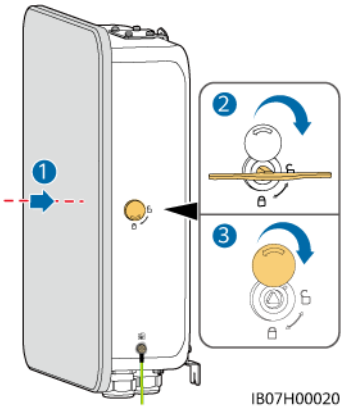

----End

6.2.1.2 Powering On the Smart Guard

NOTICE

- If the high-power load (such as a charger) configured for the power plant is connected to the non-backup load port of the Smart Guard or is connected outside the Smart Guard, choose power-on in on-grid mode for device commissioning when the power plant is powered on for the first time. If you choose power-on in off-grid mode, the high-power load cannot be detected because it is not powered on during device commissioning.
- If some of loads in the power plant are connected to the Smart Guard, choose power-on in on-grid mode or by starting the generator for device commissioning when the plant is powered on for the first time. If you choose power-on in off-grid mode, the external power meter cannot be detected during device commissioning because it is not powered on.
- If the PV strings are equipped with optimizers, power on the system in on-grid mode or by starting the generator.

Method 1: Power-On in On-Grid Mode

Step 1 Use a multimeter to check that the AC voltage in the power distribution box is within the allowed range and that cables are correctly connected.

Step 2 Turn on the main circuit breaker.

Step 3 Turn on the ESS switch.

1. (Optional) Remove the locking screw for the **DC SWITCH** of the ESS.
2. Set the **DC SWITCH** of the ESS to ON.

Step 4 Power on the inverter.

1. (Optional) Turn on the DC switch (if any) between the PV strings and the inverter.
2. (Optional) Remove the locking screw for the **DC SWITCH** of the inverter.
3. Set the **DC SWITCH** of the inverter to ON.

Step 5 Check that the Smart Guard is running in on-grid mode. Observe the LED indicators on the inverter, ESS, SmartAssistant, and Smart Guard to check the running status.

----End

Method 2: Power-On by Starting the Generator

NOTE

During system upgrade, manually start the generator on the generator control panel to prevent upgrade failures caused by generator shutdown.

Step 1 On the control panel of the generator, manually start the generator. Use a multimeter to check that the AC voltage in the power distribution box is within the allowed range and that cables are correctly connected.

Step 2 Turn on the main circuit breaker.

Step 3 Turn on the ESS switch.

1. (Optional) Remove the locking screw for the **DC SWITCH** of the ESS.
2. Set the **DC SWITCH** of the ESS to ON.

Step 4 Power on the inverter.

1. (Optional) Turn on the DC switch (if any) between the PV strings and the inverter.
2. (Optional) Remove the locking screw for the **DC SWITCH** of the inverter.
3. Set the **DC SWITCH** of the inverter to ON.

Step 5 Check that the Smart Guard is running in on-grid mode. Observe the LED indicators on the inverter, ESS, SmartAssistant, and Smart Guard to check the running status.

----End

LED Indicators on the SmartAssistant and Smart Guard

Table 6-2 SmartAssistant indicator description

Indicator	Status	Description
Running status indicator	Off	The system is not powered on.
	Steady green	The system is powered on and running.
Alarm indicator	Off	No alarm is raised.
	Blinking red slowly (on for 1s and then off for 4s)	The system raises a warning.
	Blinking red fast (on for 0.5s and then off for 0.5s)	The system raises a minor alarm.
	Steady red	The system raises an urgent/critical alarm.
Communication status indicator	Off	The IP address of the management system server is not configured. (The indicator is off when the SmartAssistant is not connected to the management system.)
	Blinking green slowly (on for 1s and then off for 1s)	The communication with the management system is normal.

Indicator	Status	Description
	Blinking green fast (on for 0.125s and then off for 0.125s)	The communication with the management system is interrupted.

Table 6-3 Indicators on the Smart Guard

Indicator	Status	Description
	Steady green	The Smart Guard is in on-grid mode.
	Blinking green slowly	The Smart Guard is in generator off-grid mode.
	Steady orange	The Smart Guard is in inverter off-grid mode.
	Steady red	A hardware alarm is generated on the Smart Guard.
	Blinking red slowly	An environment alarm is generated on the Smart Guard.

6.2.1.3 Powering On Loads

Step 1 Check that the inverter, ESS, SmartAssistant, and Smart Guard are working properly in on-grid mode.

Step 2 (Optional) Turn off switches for high-power home appliances to avoid generator overload.

Step 3 After checking that the residential load circuit is not short-circuited, turn on the backup load and non-backup load switches. Otherwise, the Smart Guard may be damaged.

Step 4 (Optional) Set Huawei charger route parameters.

Step 5 Complete device commissioning.

----End

6.2.2 Method 2: Power-On in Off-Grid Mode

Precautions

DANGER

- Wear personal protective equipment and use dedicated insulated tools to avoid electric shocks or short circuits.

NOTICE

Before the equipment is put into operation for the first time, ensure that the parameters are set correctly by professional personnel. Incorrect parameter settings may result in noncompliance with local grid connection requirements and affect the normal operations of the equipment.

6.2.2.1 Closing the Maintenance Compartment

NOTE

- Before closing the maintenance compartment, remove tools and unused screws from the maintenance compartment.
- Keep the delivered keys properly for future use.

Step 1 Install the cover of the maintenance compartment, and tighten the screw on the cover.

Figure 6-4 Closing the cover

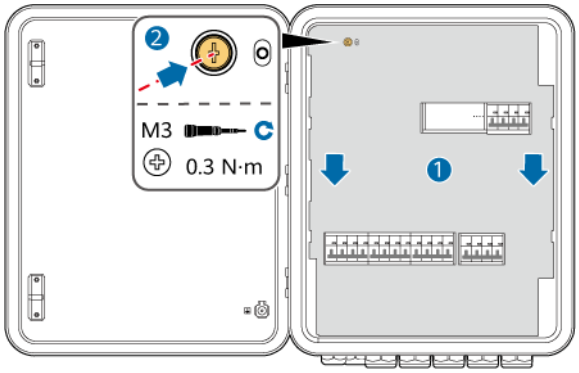

IB07H00018

Step 2 Before closing the maintenance compartment door, turn on the four switches shown in the following figure (using the connection to three parallel MAP0 inverters as an example).

 Copyright © Huawei Digital Power Technologies Co., Ltd.

DANGER

- Bypass switch: When the grid is available but the Smart Guard cannot supply power to loads due to exceptions, refer to **7.4 Operations on the Bypass Switch of the Smart Guard**. Misoperations may cause electric shocks.
- During power-on in off-grid mode, do not operate the bypass switch and ensure that it is off.

Figure 6-5 Turning on the switches

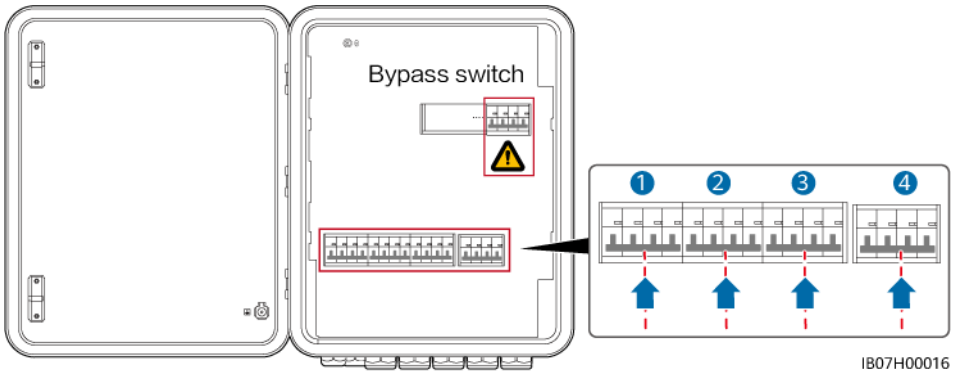

Step 3 Close the maintenance compartment door and lock the Smart Guard.

Figure 6-6 Closing the maintenance compartment

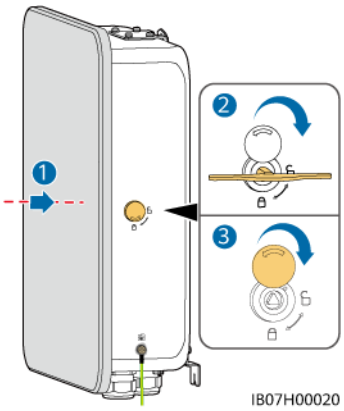

----End

6.2.2.2 Powering On the Smart Guard

NOTICE

- If the high-power load (such as a charger) configured for the power plant is connected to the non-backup load port of the Smart Guard or is connected outside the Smart Guard, choose power-on in on-grid mode for device commissioning when the power plant is powered on for the first time. If you choose power-on in off-grid mode, the high-power load cannot be detected because it is not powered on during device commissioning.
- If some of loads in the power plant are connected to the Smart Guard, choose power-on in on-grid mode or by starting the generator for device commissioning when the plant is powered on for the first time. If you choose power-on in off-grid mode, the external power meter cannot be detected during device commissioning because it is not powered on.
- If the PV strings are equipped with optimizers, power-on in off-grid mode is not supported.

Power-On in Off-Grid Mode

Step 1 Keep the main circuit breaker off.

Step 2 Power on the inverter.

1. (Optional) Turn on the DC switch (if any) between the PV strings and the inverter.
2. (Optional) Remove the knob locking screw for the **DC SWITCH** of the inverter.
3. Set the **DC SWITCH** of the inverter to ON.

Step 3 Turn on the ESS switch.

1. (Optional) Remove the locking screw for the **DC SWITCH** of the ESS.
2. Set the **DC SWITCH** of the ESS to ON.
3. Press and hold the black start button.

Step 4 Connect to the inverter on the app. On the home screen, choose **Settings** > **Grid parameters** and set the grid code for the inverter. On the home screen, choose **Settings** > **Feature parameters**, enable **Off-grid mode**, and set **Backup Box model** to **Smart Guard**.

CAUTION

Backup Box model must be set to **Smart Guard**. Otherwise, the system will not work.

Step 5 (Optional) Connect to the inverter on the app. The M1 or MB0 inverter must be upgraded to the latest version. Otherwise, the Smart Guard may fail to identify the inverter.

 Copyright © Huawei Digital Power Technologies Co., Ltd.

Step 6 Check that the Smart Guard is running in off-grid mode. Observe the LED indicators on the inverter, ESS, SmartAssistant, and Smart Guard to check the running status.

----End

LED Indicators on the SmartAssistant and Smart Guard

Table 6-4 SmartAssistant indicator description

Indicator	Status	Description
Running status indicator	Off	The system is not powered on.
	Steady green	The system is powered on and running.
Alarm indicator	Off	No alarm is raised.
	Blinking red slowly (on for 1s and then off for 4s)	The system raises a warning.
	Blinking red fast (on for 0.5s and then off for 0.5s)	The system raises a minor alarm.
	Steady red	The system raises an urgent/critical alarm.
Communication status indicator	Off	The IP address of the management system server is not configured. (The indicator is off when the SmartAssistant is not connected to the management system.)
	Blinking green slowly (on for 1s and then off for 1s)	The communication with the management system is normal.
	Blinking green fast (on for 0.125s and then off for 0.125s)	The communication with the management system is interrupted.

Table 6-5 Indicators on the Smart Guard

Indicator	Status	Description
	Steady green	The Smart Guard is in on-grid mode.

Indicator	Status	Description
	Blinking green slowly	The Smart Guard is in generator off-grid mode.
	Steady orange	The Smart Guard is in inverter off-grid mode.
	Steady red	A hardware alarm is generated on the Smart Guard.
	Blinking red slowly	An environment alarm is generated on the Smart Guard.

6.2.2.3 Powering On Loads

CAUTION

- The power and current of backup loads cannot exceed the maximum off-grid power and current of the system. You are advised to shut down high-power loads and unnecessary loads connected to the backup load port.
- In off-grid mode, if ESS SOC < End-of-discharge SOC, the inverter stops output (the backup loads are powered off) and the PV strings charge the battery. The inverter automatically resumes output when the battery SOC reaches **End-of-discharge SOC** plus 20% or higher.

Step 1 Check that the inverter, ESS, SmartAssistant, and Smart Guard are working properly in off-grid mode.

Step 2 Check that the residential backup load power does not exceed the off-grid operating power of the system.

Step 3 After checking that the residential load circuit is not short-circuited, turn on the backup load and non-backup load switches.

----End

6.3 Device Commissioning

No.	Contents
1	Downloading the App and Registering an Installer Account
2	Quick Settings, Running Information Viewing, and Alarm Management
3	Setting Parameters: Backup Power Parameter Settings, Power Control, and Battery Parameter Settings

 Copyright © Huawei Digital Power Technologies Co., Ltd.

No.	Contents
4	Connecting to a Plant
5	Registering an Owner Account or Another Installer Account
6	Energy Management: Negative Rate Optimization, Energy Management Assistant, and Intelligent Power Backup

For details about the device commissioning procedure, see the *Smart Guard Networking Commissioning Manual*. The commissioning manual varies depending on the app. Refer to the manual corresponding to the app in use.

7 System Maintenance

7.1 System Power-Off

Precautions

WARNING

- Before opening the maintenance compartment door, turn off the main circuit breaker, and then turn off the switches for residential backup loads and non-backup loads. Shut down the inverter, and turn off the DC switches of the inverter and ESS.
- Only authorized personnel can open the maintenance compartment cover to perform electrical connections.
- Before opening the maintenance compartment cover, turn off the backup load circuit breaker, the grid AC circuit breaker, and two inverter AC circuit breakers inside the Smart Guard. Ensure that the bypass switch is off.
- After the Smart Guard powers off, the remaining electricity and heat may still cause electric shocks and burns. Therefore, wait for at least 5 minutes and wear insulated gloves before working on the Smart Guard.

Procedure

Step 1 (Optional) On the generator control panel, manually shut down the generator.

Step 2 Turn off the main circuit breaker.

Step 3 Power off the inverter.

1. Send a shutdown command to the inverter on the app.
2. Set the **DC SWITCH** of the inverter to **OFF**.
3. (Optional) Install the locking screw for the **DC SWITCH**.
4. (Optional) Turn off the DC switch between the inverter and PV strings.

Step 4 Shut down the ESS.

1. Set the **DC SWITCH** of the ESS to **OFF**.
2. (Optional) Install the locking screw for the **DC SWITCH** of the ESS.

Step 5 Turn off the switches for residential backup loads and non-backup loads.

----End

7.2 Routine Maintenance

To ensure that the system operates properly for a long term, you are advised to perform routine maintenance as described in this section.

CAUTION

Before cleaning the system, connecting cables, and checking the grounding reliability, power off the system.

Table 7-1 Maintenance checklist

Check Item	Check Method	Maintenance Interval
System cleanliness	Check periodically that the Smart Guard is free from obstacles and dust.	Once every 6 to 12 months
System status	• Check that the Smart Guard is not damaged or deformed. • Check that the Smart Guard does not generate abnormal sound when it is in operation. • Check whether Smart Guard parameters are correctly set when the device is running.	Once every six months
Electrical connections	• Check whether cables are securely connected. • Check whether cables are damaged, especially whether the cable sheath that contacts a metal surface is damaged. • Unused AC input ports, COM ports, and waterproof covers on the Smart Guard are locked.	6 months after the first commissioning and once every 6 to 12 months after that
Grounding reliability	Check whether the PE cable is securely connected.	6 months after the first commissioning and once every 6 to 12 months after that

 Copyright © Huawei Digital Power Technologies Co., Ltd.

7.3 Alarm Reference

For details, see **Smart Guard Alarm Reference**.

7.4 Operations on the Bypass Switch of the Smart Guard

Precautions

DANGER

- During normal use, do not operate the bypass switch and ensure that it is off.
- Do not turn on the bypass switch when the power is on. Otherwise, the high voltage may result in electric shocks and damage to the equipment.
- When the grid is available but the Smart Guard is abnormal and cannot supply power to loads, check and clear the Smart Guard alarm. If the fault persists, consult the customer service personnel and then operate the bypass switch. Misoperations may cause electric shocks.

WARNING

- In bypass switch mode, ignore the alarm indicating that the bypass switch is on.
- Before opening the maintenance compartment door, turn off the main circuit breaker, and then turn off the switches for residential backup loads and non-backup loads. Shut down the inverter, and turn off the DC switches of the inverter and ESS.
- Only authorized personnel can open the maintenance compartment cover to perform electrical connections.
- After the Smart Guard powers off, the remaining electricity and heat may still cause electric shocks and burns. Therefore, wait for at least 5 minutes and wear insulated gloves before working on the Smart Guard.

Procedure

Step 1 Confirm that the system alarm cannot be cleared when the grid is available and the Smart Guard cannot supply power to loads.

Step 2 Power off the system. For details, see **7.1 System Power-Off**.

Step 3 Perform operations on the Smart Guard bypass switch.

1. Open the maintenance compartment door and turn off the four switches shown in the figure.

 Copyright © Huawei Digital Power Technologies Co., Ltd.

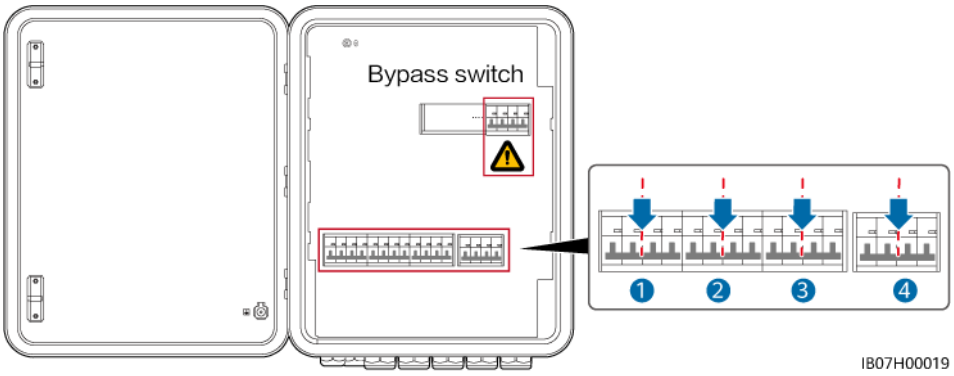

2. Remove the bypass switch latch, turn on the bypass switch, and then turn on switches ❸ and ❹ shown in the figure.

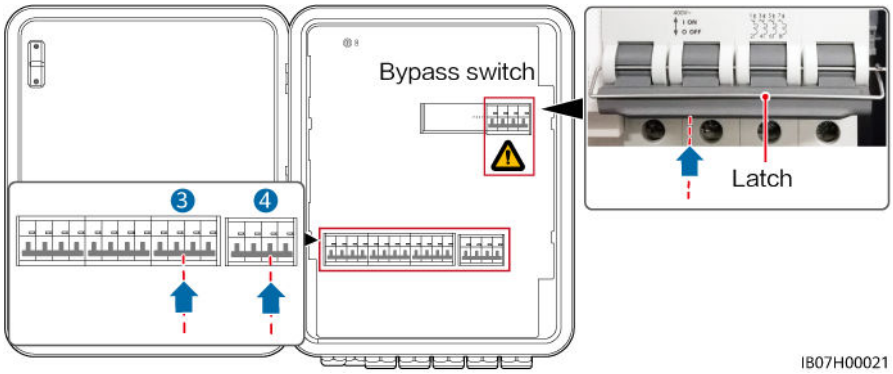

3. Close the maintenance compartment door.

Step 4 Turn on the main circuit breaker, and then turn on the switches for residential backup loads and non-backup loads.

Step 5 After the system recovers:

1. Power off the system and open the maintenance compartment door.
2. Turn off the bypass switch and install the bypass switch latch.

Figure 7-1 Turning off the bypass switch

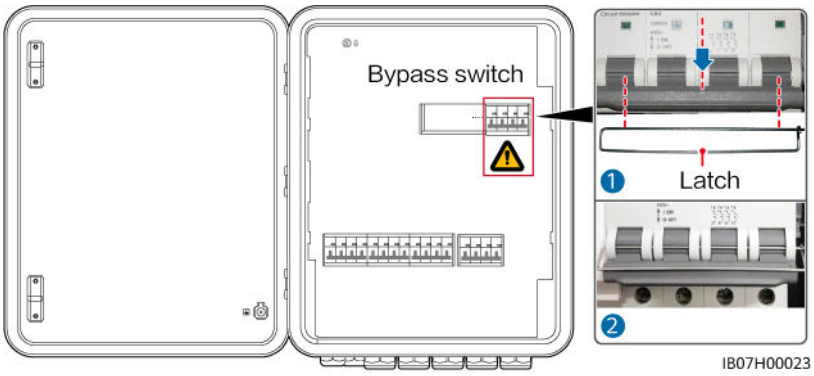

3. Close the maintenance compartment door and power on the system.

----End

7.5 Replacing the Smart Guard

Precautions

DANGER

- Wear personal protective equipment and use dedicated insulated tools to avoid electric shocks or short circuits.

WARNING

- Before performing maintenance, power off the equipment, follow the instructions on the delayed discharge label, and wait for a period of time as specified to ensure that the equipment is not energized.
- Before opening the maintenance compartment door, turn off the main circuit breaker, and then turn off the switches for residential backup loads and non-backup loads. Shut down the inverter, and turn off the DC switches of the inverter and ESS.
- Danger - High voltage. Only authorized professionals are allowed to open the maintenance compartment cover.
- Before opening the maintenance compartment cover, turn off the backup load circuit breaker, the grid AC circuit breaker, and two inverter AC circuit breakers inside the Smart Guard. Ensure that the bypass switch is off.
- After the Smart Guard powers off, the remaining electricity and heat may still cause electric shocks and burns. Therefore, wait for at least 5 minutes and wear insulated gloves before working on the Smart Guard.

Procedure

Step 1 Power off the system. For details, see **7.1 System Power-Off**.

Step 2 Open the maintenance compartment door, and turn off the backup load circuit breaker, grid AC circuit breaker, and two inverter AC circuit breakers inside the Smart Guard.

Step 3 Remove all electrical connections from the Smart Guard.

Step 4 Unscrew the Smart Guard from the mounting bracket.

Step 5 Install a new Smart Guard. For details, see **4 System Installation**.

Step 6 Perform electrical connections. For details, see **5 Electrical Connections**.

Step 7 Commission the Smart Guard. For details, see **6 System Commissioning**.

----End

 Copyright © Huawei Digital Power Technologies Co., Ltd.

8 Technical Specifications

Technical Specifications

Item	SmartGuard-63A-T0	SmartGuard-63A-AUT0
Inverter port current	60 A	
Current of the backup load port	63 A	
Current of the non-backup load port	63 A	
Grid port current	63 A	
Rated AC voltage	380/400/415 V, 220/230/240 V, L1/L2/L3/N+PE	
Startup mode	Started on the grid/generator side or on the inverter side	
Working modes	On-grid, off-grid, and generator	
LVRT	Supported	
On/Off-grid switchover control	Automatic or forced	
On/Off-grid switchover time (seamless switchover)	• < 20 ms (MAP0) • < 100 ms (M1, MB0)	
Home energy management system (SmartAssistant)	Available	
Remote generator startup	Automatic or manual	
Generator DO port	1–100 mA, ≤ 24 V	
Bypass mode	Manual	

 Copyright © Huawei Digital Power Technologies Co., Ltd.

Display and Communication

Item	SmartGuard-63A-T0	SmartGuard-63A-AUT0
Display	LED indicators; WLAN+App	
RS485	Supported	
Built-in WLAN	Supported	

General Specifications

Item	SmartGuard-63A-T0	SmartGuard-63A-AUT0
Weight	≤ 17 kg	
Dimensions (W x H x D)	490 mm x 600 mm x 170 mm	
Noise	< 29 dB	
Cooling mode	Natural cooling	
Maximum operating altitude	4000 m (derated when the altitude is greater than 2000 m)	
Operating temperature	–25°C to +50°C	
IP rating	IP55	

NOTE

- On-grid mode: The ambient temperature ranges from –25°C to +30°C, and the long-term steady-state current is not derated. When the temperature ranges from 30°C to 40°C, the current is linearly derated from 63 A to 53 A. When the temperature ranges from 40°C to 50°C, the current is linearly derated from 53 A to 43 A (three-phase balanced load and PF = 1).
- Off-grid mode (MAP0): When the ambient temperature ranges from –25°C to +30°C, the long-term steady-state current is not derated. When the temperature ranges from 40°C to 50°C, the current is linearly derated from 60 A to 50 A (non-three-phase balanced load and PF ≥ 0.8).
- Off-grid mode (M1 and MB0): When the ambient temperature ranges from –25°C to +40°C, the long-term steady-state current is not derated.

Wireless Communication Specifications

Item	WLAN
Frequency	2400–2483.5 MHz
Protocol standard	WLAN 802.11b/g/n
Bandwidth	≤ 20 MHz

Item	WLAN
Maximum transmit power	≤ 20 dBm E.I.R.P.

External WLAN Antenna Specifications

Item	WLAN
Frequency	2400–2483.5 MHz
Gain	≤4dBi
Port	RP-SMA-J reverse-polarity male connector (with inner threads and inner holes)
Mounting mode	By magnet
Cable length	2 m

 Copyright © Huawei Digital Power Technologies Co., Ltd.

A ATS Parameter Requirements

NOTE

When the ATS is working, it consumes electric energy, which cannot be measured by the SmartAssistant. As a result, the control accuracy of limited feed-in is affected.

Item	Specifications	Description
ATS pole quantity	TN-S/TN-C-S/TT system: ● SmartGuard-63A-T0: 4-pole ● SmartGuard-63A-AUT0: 3-pole/4-pole	If the SmartGuard-63A-AUT0 uses a 4-pole ATS, external cable connection is required to ensure that the neutral wire is not disconnected or the ATS does not disconnect the neutral wire.
	TN-C system: 3-pole or 4-pole	If a 4-pole ATS is used, external cable connection is required to ensure that the PEN wire is not disconnected or the ATS does not disconnect the PEN wire.
Switching mode	Automatic	The ATS detects the power supply status of the mains and generator in real time and automatically switches between them based on system instructions.
Operating mode	● Automatic ● Manual	The Smart Guard requires that the ATS work in automatic mode. The ATS works in manual mode only for system maintenance.

 Copyright © Huawei Digital Power Technologies Co., Ltd.

Item	Specifications	Description
Rated current	• When the rated current of the generator is greater than the current of the main circuit breaker, the rated current of the ATS is greater than or equal to the rated current of the generator. • When the rated current of the generator is less than the current of the main circuit breaker, the rated current of the ATS is greater than or equal to the current of the main circuit breaker.	Select cables based on the actual current.
Operating voltage	380/400/415 V, 220/230/240 V	The operating voltage range of the ATS may affect the HVRT and undervoltage protection functions of the system.
Switching time	• If the seamless switching function of the Smart Guard is enabled, the switching time of the ATS shall be greater than or equal to 500 ms • If the seamless switching function of the Smart Guard is disabled, the switching time of the ATS shall be greater than or equal to 5s.	The time for switching between the generator and the grid must not fall below the lower limit; otherwise, the devices in the system will be affected.
Startup delay	Recommended value: ≤ 1 min	The duration from the time when the generator receives the startup signal to the time when the AC output of the generator becomes stable plus the ATS successful switching time shall be less than 5 min (this is the default value. The actual value can be a larger one.)
Power-off status	Hold	When the ATS is powered off, the AC circuit and connection position feedback signal of the ATS must remain in the working state before the power failure. Otherwise, the LVRT function of the system will be affected.

 Copyright © Huawei Digital Power Technologies Co., Ltd.

Item	Specifications	Description
Position feedback signal upon grid connection	• The ATS port for the position feedback signal upon grid connection must be a passive port that works with an external circuit and can work at a current of less than or equal to 0.7 mA@12 V. • The low impedance of the circuit for the position feedback signal upon grid connection is less than or equal to 100 ohms. • The delay between the position feedback signal upon grid connection and the grid connection is within ±100 ms.	1. When the grid is connected, the circuit for the position feedback signal upon grid connection has low impedance. When the grid is disconnected, the circuit has high impedance. High impedance and low impedance corresponding to the grid status (available and unavailable) can be set on the app. 2. The port for the position feedback signal upon grid connection must be a passive port. If an active port is used, the Smart Guard may be damaged, which is not covered under the warranty. 3. Enhanced insulation design is required between the ATS signal port and the AC circuit.

Figure A-1 Position feedback signal upon grid connection

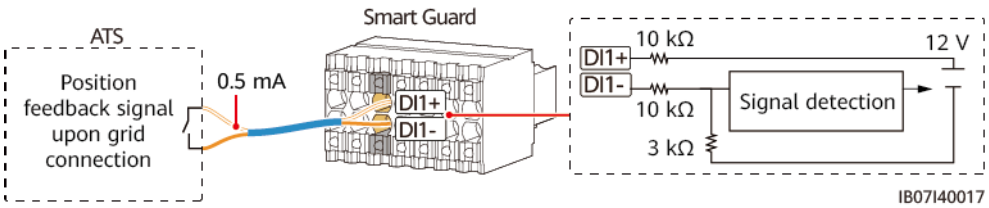

 Copyright © Huawei Digital Power Technologies Co., Ltd.

B Generator Parameter Requirements

Item	Specifications	Description
Operating mode	• Remote • Manual	The Smart Guard requires that the generator work in remote mode. The manual mode of the generator is used only when the generator is powered on for the first time.
Operating voltage	380/400/415 V, 220/230/240 V, L1/L2/L3/N, 50 Hz/60 Hz	Both three-phase unbalanced loads and single-phase loads can be connected.
Startup delay	Recommended value: ≤ 4 min	The duration from the time when the generator receives the startup signal to the time when the AC output of the generator becomes stable plus the ATS successful switching time shall be less than 5 min (this is the default value. The actual value can be a larger one.)
Generator groundin g	-	The neutral wire of the generator must be grounded. Otherwise, the Smart Guard will report a generator grounding exception alarm.

 Copyright © Huawei Digital Power Technologies Co., Ltd.

Item	Specifications	Description
Generator control signal	The port on the generator side must be an active port. After the port is connected to the signal circuit of the Smart Guard, the circuit current ranges from 1 mA to 100 mA, and the voltage is less than or equal to 24 V.	1. The Smart Guard can remotely start or shut down the generator through the port on the generator side. 2. The port on the Smart Guard side must be a passive port. When the circuit impedance is low, the generator starts. When the circuit impedance is high, the generator shuts down. 3. If the voltage of the port on the generator side or the circuit current is too high, the Smart Guard may be damaged, which is not covered under the warranty. If the current is too low, the internal circuit of the Smart Guard may work abnormally. 4. Enhanced insulation design is required between the port on the generator side and the AC circuit of the generator.
Generator alarm signal (optional)	• The port on the generator side must be a passive port that works with an external circuit and can work at a current of less than or equal to 0.7 mA@12 V. • The low impedance for triggering the generator alarm signal is less than or equal to 100 ohms.	1. If the generator fails to work, the generator alarm signal circuit has low impedance by default. When the generator is normal, the generator alarm signal circuit has high impedance. High impedance and low impedance corresponding to the generator status (faulty and normal) can be set on the app. 2. The port on the generator side must be a passive port. If an active port is used, the Smart Guard may be damaged, which is not covered under the warranty 3. Enhanced insulation design is required between the port on the generator side and the AC circuit of the generator.

Figure B-1 Generator control signal

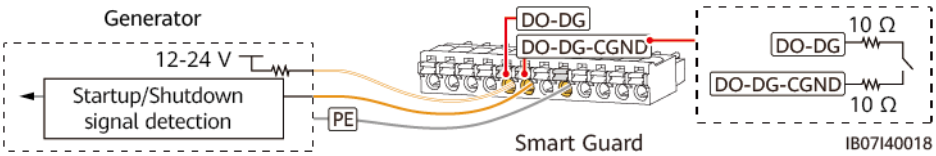

Figure B-2 Generator alarm signal

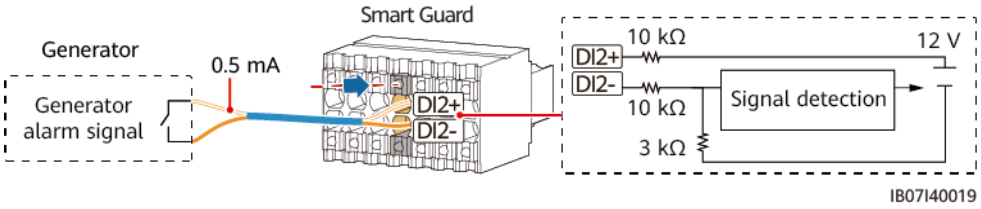

 Copyright © Huawei Digital Power Technologies Co., Ltd.

C Contact Information

If you have any questions about this product, please contact us.

https://digitalpower.huawei.com

Path: **About Us** > **Contact Us** > **Global Service Hotlines**

To ensure faster and better services, we kindly request your assistance in providing the following information:

- Model
- Serial number (SN)
- Software version
- Alarm ID or name
- Brief description of the fault symptom

 Copyright © Huawei Digital Power Technologies Co., Ltd.

NOTE

EU Representative Information: Huawei Technologies Hungary Kft.
Add.: HU-1133 Budapest, Váci út 116-118., 1. Building, 6. floor.
Email: hungary.reception@huawei.com

D Digital Power Customer Service

https://digitalpower.huawei.com/robotchat/

 Copyright © Huawei Digital Power Technologies Co., Ltd.

E Certificate Management and Maintenance

E.1 Initial Certificate Risk Disclaimer

Huawei's initial certificates are mandatory identity credentials for Huawei devices before delivery. The disclaimer statements for using the certificates are as follows:

1. Huawei's initial certificates are used only to establish initial security channels for devices to access the customer network during deployment.
2. Initial certificates have a validity period. The validity period of Huawei's root certificates expires in 2041 and 2099, respectively, and the validity period of identity certificates expires earlier than that of root certificates. For details about how to query the expiration time of identity certificates, see **E.4 Querying the Validity Period of the Identity Certificate**.
3. After devices access the customer network, the management responsibilities of the devices and digital certificates are transferred to the customer. Huawei recommends that the customer replace the initial certificates used by devices on the live network with customer's own certificates, and use certificates with a short validity period and periodically replace the certificates in accordance with industry best practices. This helps mitigate the risk of private key leakage of digital certificates and prevent service interruption caused by certificate expiration.

For details about the rights and responsibilities related to initial certificates, see **Rights and Responsibilities of Initial Digital Certificates on Huawei Devices**.

 Copyright © Huawei Digital Power Technologies Co., Ltd.

E.2 Application Scenarios of Initial Certificates

Usage	Name on App	Name on Management System	Scenario	Replacement Guide
Management system communication certificate	Management system certificate	Modbus-TCP NMS	Authenticates the validity of a management system for communication through Modbus-TCP.	E.3.1 Replacing a Certificate on the Management System E.3.2 Replacing a Certificate on the App
App communication certificate	App communication certificate	Local O&M Service	Authenticates the validity of a mobile app for communication through Modbus-TCP.	
Battery communication certificate	ESS communication certificate	Modbus-TCP Device	Authenticates the validity of a battery for communication through Modbus-TCP.	
Third-party EMS/VPP communication certificate	Third-Party Management System Certificate	Management system 1 (third-party)	Authenticates the validity of a third-party management system for communication through Modbus-TCP. **NOTICE** For communication with a third-party management system through Modbus-TCP, import the certificate from the third-party vendor.	
Modbus TCP certificate	Modbus TCP Certificate	Modbus-TCP Device	Authenticates the validity of a Modbus-TCP device for communication through Modbus-TCP.	
On the management system, the procedures for replacing different certificates are the same. On the app, the procedures for replacing different certificates are the same.				

E.3 Updating a Certificate

E.3.1 Replacing a Certificate on the Management System

Initial certificates are used only for commissioning and are not for commercial use. Replace the initial certificates with new ones to improve communication security.

 Copyright © Huawei Digital Power Technologies Co., Ltd.

To prevent security risks caused by expired certificates, you are advised to periodically update certificates.

Prerequisites

You have applied for a new certificate from the CA and have obtained the new certificate files.

Table E-1 Certificate requirements

Parameter	Requirement
Certificate signature algorithm	Use industry-leading security algorithms, such as sha256WithRSAEncryption or sha256ECDSA.
Key length	● For keys encrypted using RSA, the recommended length is 3072 bits or longer. ● For keys encrypted using ECDSA, the length can be 256 or 384 bits. **NOTE** RSA keys shorter than 2048 bits or ECDSA keys shorter than 256 bits are insecure. For security purposes, ensure that the private key of the ER certificate is an RSA key of 3072 bits or longer or an ECDSA key of 256 bits or longer.
Certificate storage format	.crt and .cer are supported. The certificate in .crt format must be encoded using Base64. ● The certificate file in .crt format is as follows: – **client.crt**: identity certificate file – **client_key.pem**: private key of the identity certificate ● The certificate file in .cer format is as follows: – **client.cer**: identity certificate file – **client_key.pem**: private key of the identity certificate
Private key file format	PKCS#8 format.
Password complexity of the private key file	Contain 8 to 64 characters, including at least two types of the following: ● Uppercase letters ● Lowercase letters ● Digits ● Special characters (excluding <>;+&/\\|%(),`$)

Method 1: Updating a Certificate Online on the Management System

1. Log in to the management system using an installer account.
2. Choose **Plants** > **Device** > **Device Certificate Management**.

3. Create an identity certificate template.
   a. Choose **Identity Certificate Template** and click **Create**.
   b. Set certificate application template parameters as required.

Table E-2 Key parameters

Parameter	Description
CA Connection Mode	Select **Proxy**. **NOTE** Apply for Replacement Online: Connect to the CA server through the CA proxy to apply for a certificate for the device and replace the device certificate.
CA Server Name	Select a CA server.
Key Type	Set this parameter according to **Table E-1**.
Key Length	
Common Name (CN)	Set this parameter as planned, for example, to **Device ESN**.

   c. Click **OK**.
4. Update the identity certificate.
   a. Choose **Task Center** and click **Replacing Identity Certificate**.
   b. On the page for replacing the identity certificate, select **Apply for Replacement Online** and click **Start**.
5. Set related parameters as prompted and replace the certificate.

Method 2: Updating a Certificate Offline on the Management System

1. Log in to the management system as an installer.
2. Choose **Plants** > **Device** > **Device Certificate Management**.
3. Create an identity certificate template.
   a. Choose **Identity Certificate Template** and click **Create**.
   b. Set certificate application template parameters as required.

Table E-3 Key parameters

Parameter	Description
CA Connection Mode	Select **Offline**.
Key Type	Set this parameter according to **Table E-1**.
Key Length	

Parameter	Description
Common Name (CN)	Set this parameter as planned, for example, to **Device ESN**.

c. Click **OK**.

4. Obtain the CSR file and apply for a certificate.

   a. Choose **Task Center** and click **Replacing Identity Certificate**.

   b. On the page for replacing the identity certificate, select **Replace by CSR File** and click **Start**.

   c. Configure the identity certificate information and click **Apply for CSR Replacement**.

   Table E-4 Key parameters

Parameter	Description
Application Type	Select the type of the certificate to be updated.
Device Scope	Select the device for which the identity certificate needs to be updated.
Identity Certificate Template	Select the created identity certificate template.

   d. After the CSR file is generated, download and use the CSR file to apply for and obtain a new certificate and related certificate files from the CA.

5. Upload and update the identity certificate. You need to upload and update the certificate as prompted.

   NOTE

   If you have exited the process of replacement by CSR file, go to the task list on the **Task Center** page, locate the target task, and click the edit button in the **Operation** column to re-enter the process of replacement by CSR file.

E.3.2 Replacing a Certificate on the App

Initial certificates are used only for commissioning and are not for commercial use. Replace the initial certificates with new ones to improve communication security. To prevent security risks caused by expired certificates, you are advised to periodically update certificates.

Prerequisites

You have applied for a new certificate from the CA and have obtained the new certificate files.

Table E-5 Certificate requirements

Parameter	Requirement
Certificate signature algorithm	Use industry-leading security algorithms, such as sha256WithRSAEncryption or sha256ECDSA.
Key length	● For keys encrypted using RSA, the recommended length is 3072 bits or longer. ● For keys encrypted using ECDSA, the length can be 256 or 384 bits. **NOTE** RSA keys shorter than 2048 bits or ECDSA keys shorter than 256 bits are insecure. For security purposes, ensure that the private key of the ER certificate is an RSA key of 3072 bits or longer or an ECDSA key of 256 bits or longer.
Certificate storage format	.crt and .cer are supported. The certificate in .crt format must be encoded using Base64. ● The certificate file in .crt format is as follows: – **client.crt**: identity certificate file – **client_key.pem**: private key of the identity certificate ● The certificate file in .cer format is as follows: – **client.cer**: identity certificate file – **client_key.pem**: private key of the identity certificate
Private key file format	PKCS#8 format.
Password complexity of the private key file	Contain 8 to 64 characters, including at least two types of the following: ● Uppercase letters ● Lowercase letters ● Digits ● Special characters (excluding <>;+&/\\|%(),`$)

Step 1 Log in to the app using an installer account, connect to the device, and choose **Set** > **Communication configuration** > **Certificate management**.

Step 2 Select the certificate to be replaced, upload the corresponding certificates (root certificate, customer certificate, and key file), and enter the key password to replace the certificate.

Step 3 After the replacement is complete, tap **Replace current certificate**.

----End

E.4 Querying the Validity Period of the Identity Certificate

The SmartAssistant will trigger an alarm 60 days before the certificate expires to remind you to update the certificate in a timely manner. You can query the validity period of the identity certificate on the management system.

Querying the Validity Period of the Identity Certificate

1. Log in to the management system as an installer.
2. Choose **Plants** > **Device** > **Device Certificate Management**.
3. Choose **Device Certificate List**.
4. On the **Device Certificate List** page, enter information such as the device name and certificate status.
5. Click **Query**.

F Acronyms and Abbreviations

A

AC	alternating current
APP	application
ATS	automatic transfer switch

C

COM	communication

D

DI	digital input
DO	digital output

E

ETH	Ethernet

G

GE	gigabit Ethernet

L

LAN	local area network
LED	light-emitting diode

N

NC	normally closed
NO	normally open

P

POE	power over Ethernet
PE	protective earthing

R

RST	reset
RH	relative humidity

S

SOC	state of charge
SOH	state of health
SN	serial number

W

WAN	wide area network